FORM NO. 3313-789 Rev. A

TORO®

MODEL NO. 26682-9000001 & UP

PARTS CATALOG

21" S.P. REAR BAGGER

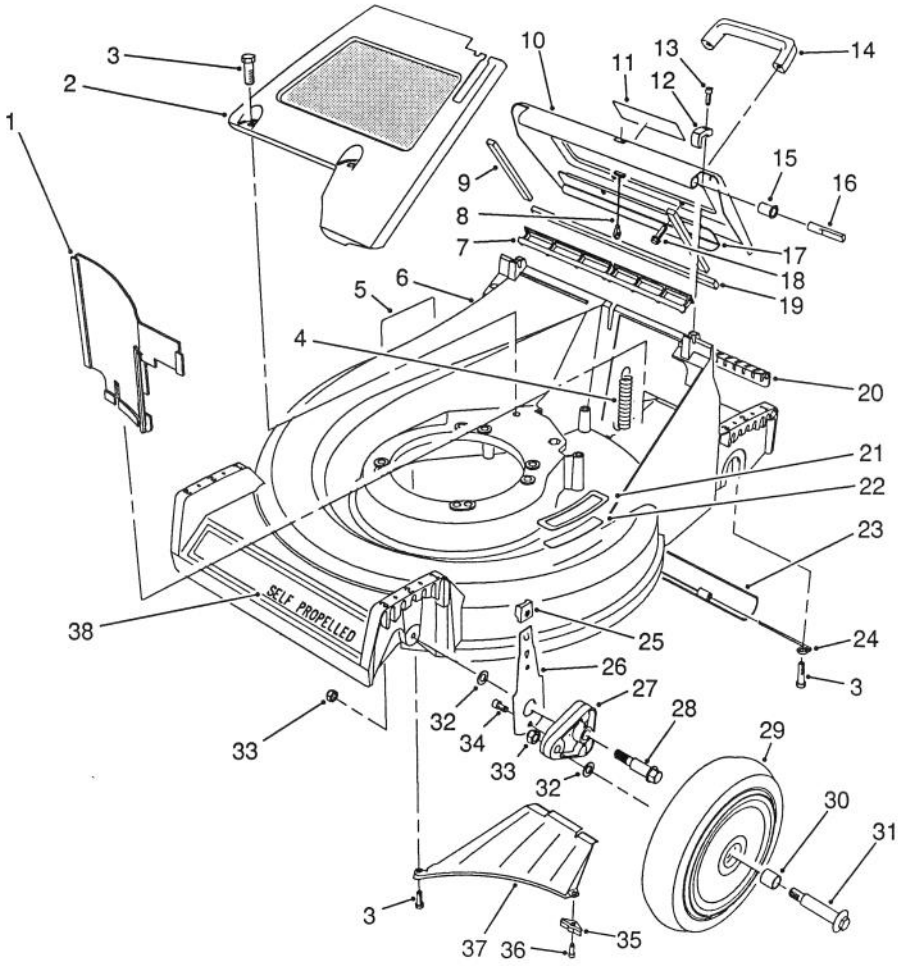

C-0250

HOUSING ASSEMBLY (Unit Serial No. 9000001 thru 9001588 and 9003525 & UP)

Ref. No.	Part No.	Description	No. Used
1	66-0020	Panel - Vertical	1
2	65-5660	Panel - Screen	1
3	32144-70	Screw - Cap Hex. Hd.	5
4	65-5360	Spring - Extension	1
5	62-3860	Decal - Danger	1
6	13-5879	Housing - 21" (Incl. Ref. #5 & 22)	1
7	65-5160	Seal - Door	1
8	65-5370	Cable - Door	1
9	65-5480	Seal - Door Side	2
10	13-5889	Door - Discharge (Incl. Ref. #9, 11, 17 & 19)	1
11	68-9570	Decal - Warning	1
12	65-5140	Clamp - Hinge	2
13	65-5210	Screw - Hex. Socket Hd.	2
14	65-5100	Handle - Door	1

Ref. No.	Part No.	Description	No. Used
15	65-5460	Bushing - Door	2
16	65-5290	Pin - Hinge	2
17	66-0610	Brace - Door	1
18	46-8091	Screw - Handle	2
19	65-5490	Seal - Door (End)	1
20	65-5150	Cover - Access	1
21	66-0110	Pad - Step	1
22	46-7370	Decal - Step Pad	1
23	65-5350	Shield - Trailing	1
24	66-0150	Hanger - Shield (L.H.)	1
*	66-0140	Hanger - Shield (R.H.)	1
25	25-7740	Knob - Spring Arm	2
26	66-0540	Arm - Front Spring	2
27	66-0580	Arm - Front Pivot	2
28	66-0560	Screw - Shoulder	2

*Not Illustrated

©The TORO Company - 1989

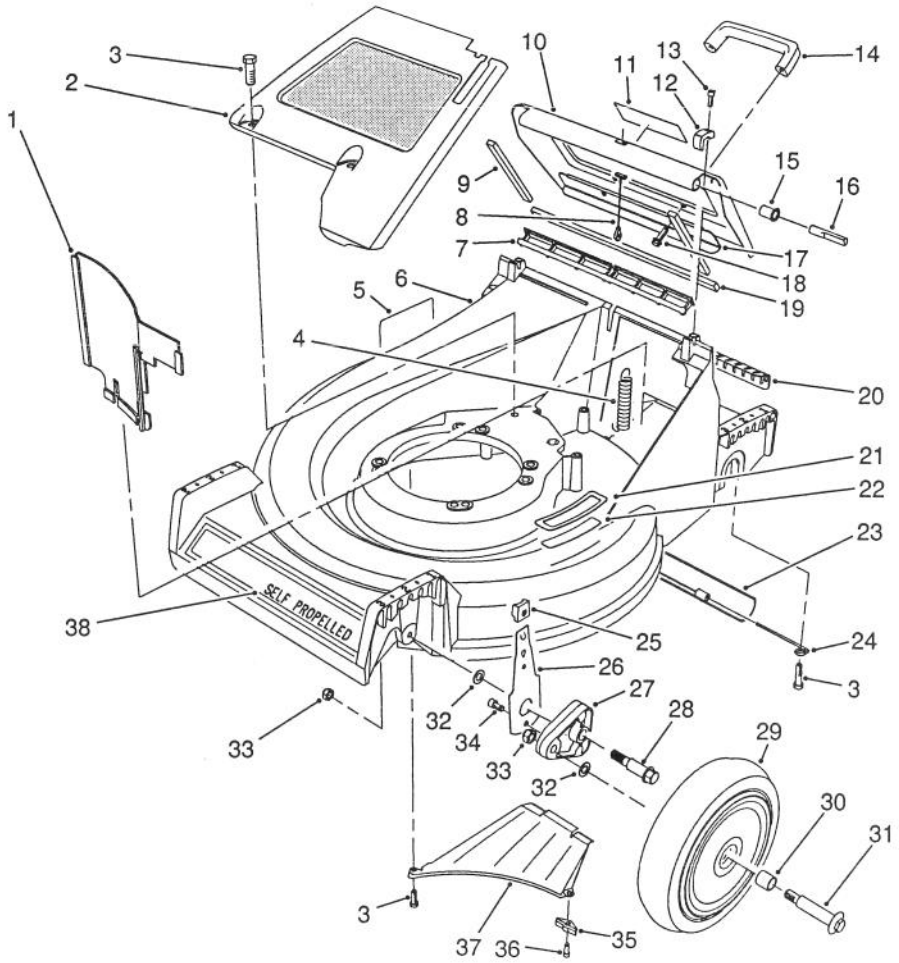

C-0250

HOUSING ASSEMBLY (Unit Serial No. 9000001 thru 9001588 and 9003525 & UP)(Continued)

Ref. No.	Part No.	Description	No. Used
29	11-9509	Wheel & Tire Assembly (Incl. Ref. #30)	2
30	27-6250	Bushing - Wheel	4
31	27-6231	Bolt - Wheel	2
32	40-1940	Washer - Wheel	4
33	52-3620	Nut - Lock	4

Ref. No.	Part No.	Description	No. Used
34	65-5220	Screw - Cap Socket Hd.	2
35	66-0640	Bracket - Discharge	1
36	65-5221	Screw - Bracket	1
37	65-5010	Ramp - Discharge	1
38	66-0460	Decal - 21"	1

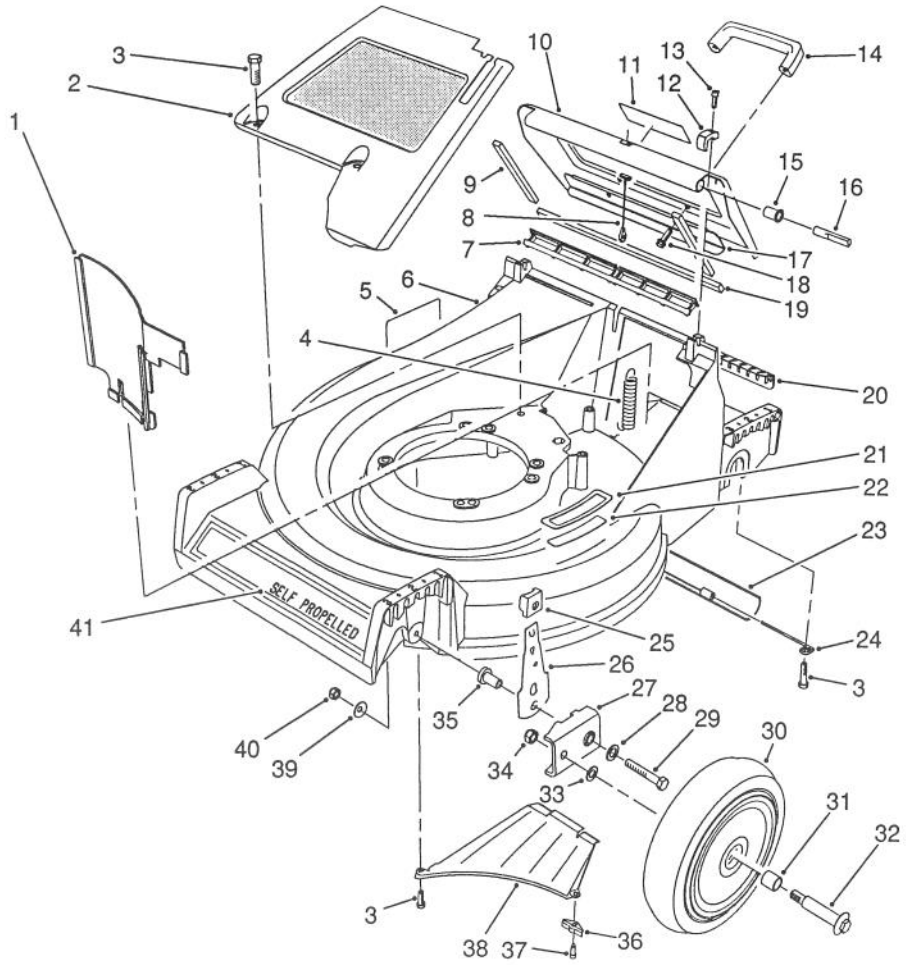

C-0251

HOUSING ASSEMBLY (Unit Serial No. 9001589 thru 9003524)

Ref. No.	Part No.	Description	No. Used
1	66-0020	Panel - Vertical	1
2	65-5660	Panel - Screen	1
3	32144-70	Screw - Cap Hex. Hd.	5
4	65-5360	Spring - Extension	1
5	62-3860	Decal - Danger	1
6	13-6639	Housing - 21"	1
7	65-5160	Seal - Door	1
8	65-5370	Cable - Door	1
9	65-5480	Seal - Door Side	2
10	13-5889	Door - Discharge (Incl. Ref. #9, 11, 17 & 19)	1
11	68-9570	Decal - Warning	1
12	65-5140	Clamp - Hinge	2
13	65-5210	Screw - Hex. Socket Hd.	2
14	65-5100	Handle - Door	1
15	65-5460	Bushing - Door	2
16	65-5290	Pin - Hinge	2
17	66-0610	Brace - Door	1
18	46-8091	Screw - Handle	2
19	65-5490	Seal - Door (End)	1
20	65-5150	Cover - Access	1
21	66-0110	Pad - Step	1
22	46-7370	Decal - Step Pad	1
23	65-5350	Shield - Trailing	1
24	66-0150	Hanger - Shield (L.H.)	1
*	66-0140	Hanger - Shield (R.H.)	1
25	25-7740	Knob - Spring Arm	2
26	66-0410	Arm - Front Spring	2
27	47-2940	Arm - Front Pivot	2
28	3256-2	Washer - Flat	2
29	322-2	Screw - Cap Hex. Hd.	2
30	11-9509	Wheel & Tire Assembly (Incl. Ref. #31)	2
31	27-6250	Bushing - Wheel	4
32	27-6231	Bolt - Wheel	2
33	40-1940	Washer - Wheel	4
34	52-3620	Nut - Lock	2
35	65-5080	Bushing	2
36	66-0640	Bracket - Discharge	1
37	65-5221	Screw - Bracket	1
38	65-5010	Ramp - Discharge	1
39	3290-456	Washer - Belleville	2
40	3296-29	Nut - Lock	2
41	66-0460	Decal - 21"	1

*Not Illustrated

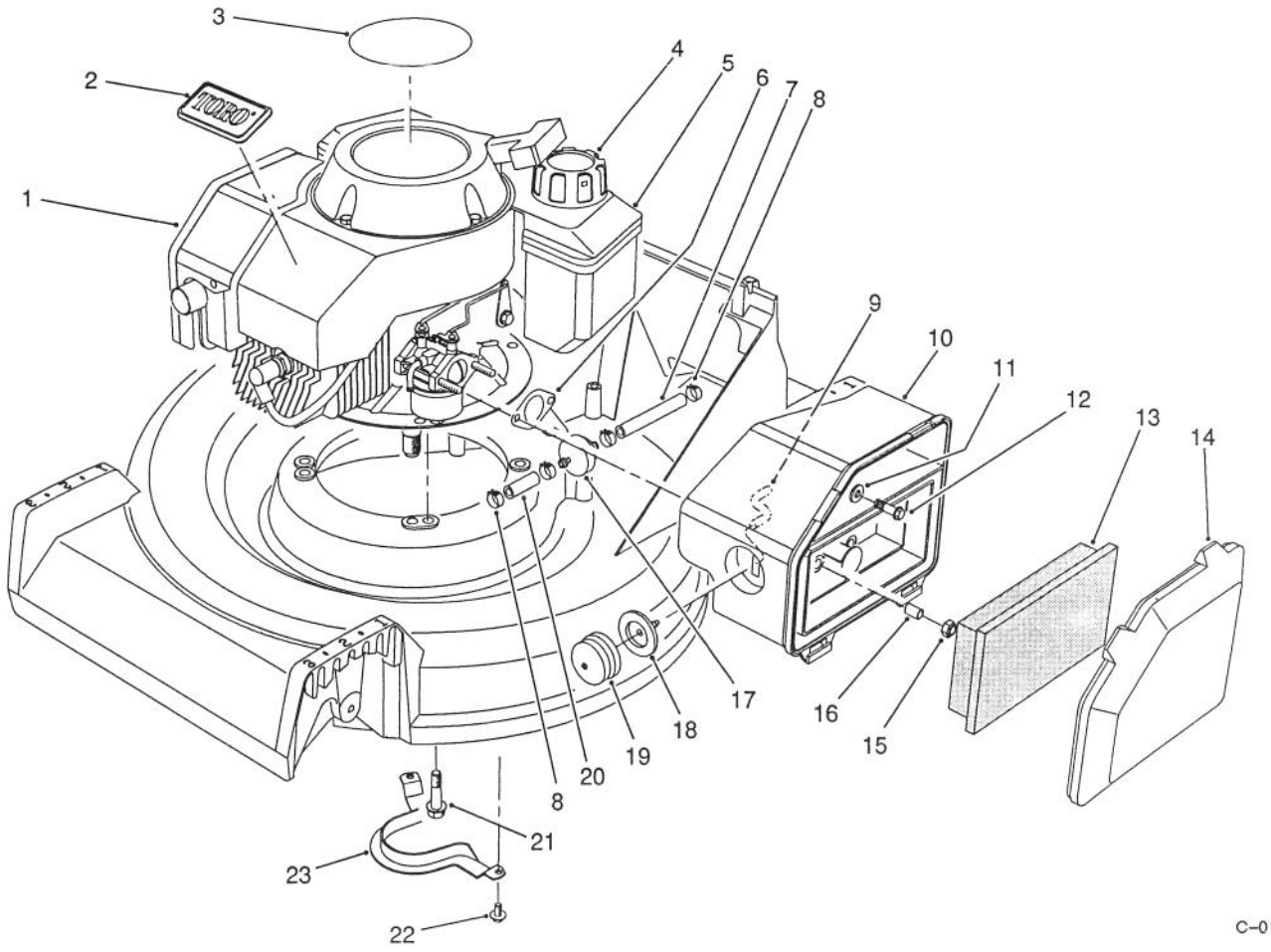

C-0175

ENGINE ASSEMBLY

Ref. No.	Part No.	Description	No. Used
1	51-0402	Engine - 2 Cycle	1
2	46-8290	Plate - TORO Logo	1
3	66-0510	Decal - Recoil	1
4	55-3575	Cap - Gas	1
5	81-0162	Tank - Fuel	1
6	81-0090	Gasket - Air Cleaner	1
7	51-3215	Line - Fuel	1
8	2412-95	Clamp - Fuel Line	4
9	44-3172	Hose - Primer	1
10	63-9330	Body - Air Cleaner	1
11	3256-16	Washer - Flat	1
12	51-2690	Screw - Hex. Flange Hd.	1

Ref. No.	Part No.	Description	No. Used
13	63-9380	Element - Air Cleaner	1
14	63-9340	Cover - Air Cleaner	1
15	50-7180	Nut - Lock	2
16	62-3980	Spacer	2
17	56-6360	Filter - Fuel	1
18	44-2750	Body - Primer	1
19	66-7460	Bulb - Primer	1
20	51-3216	Line - Fuel	1
21	66-9300	Screw - Cap Hex. Hd.	3
22	32144-70	Screw - Cap Hex. Hd.	2
23	66-0570	Guide - Belt	1

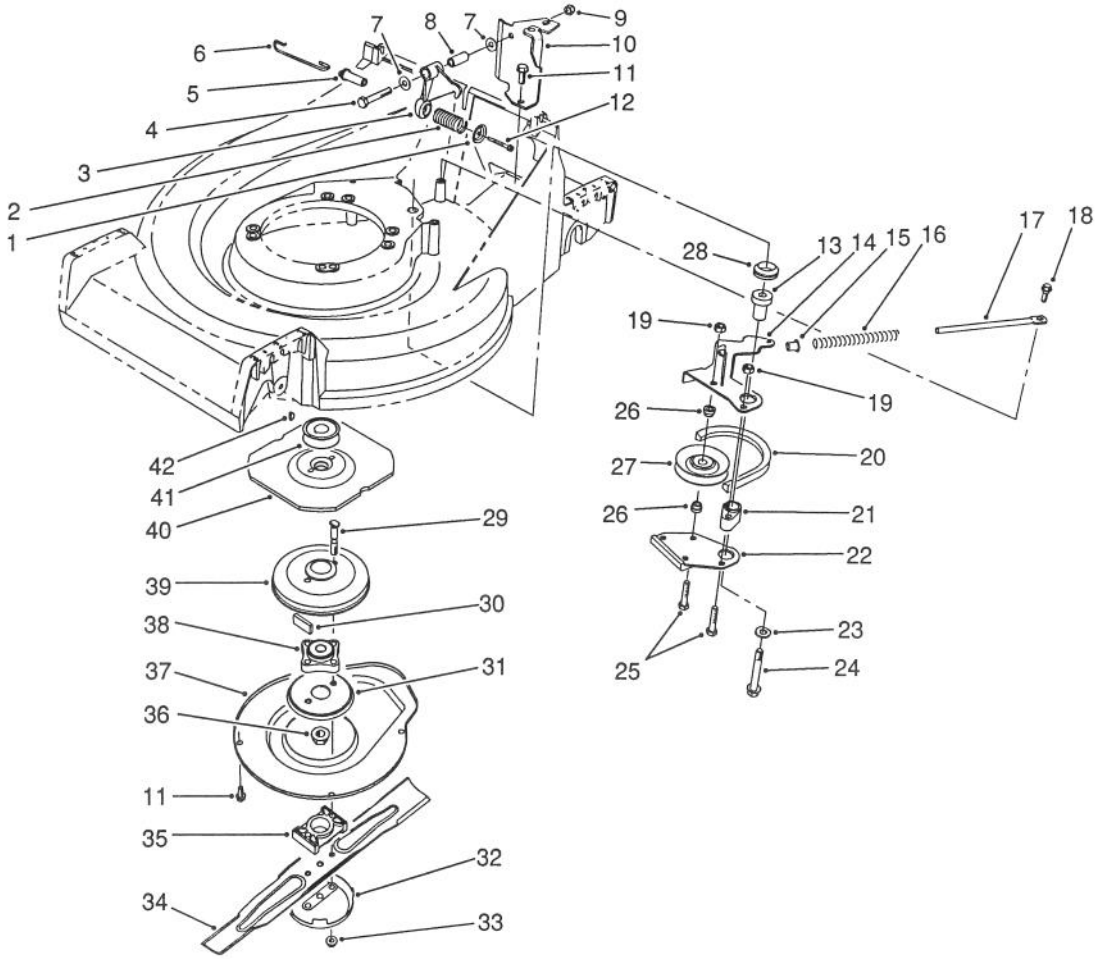

C-0182

BLADE BRAKE CLUTCH ASSEMBLY

Ref. No.	Part No.	Description	No. Used
1	65-5280	Retainer - Spring	1
2	71-3630	Spring - Compression	1
3	65-5700	Crank	1
4	322-21	Screw - Cap Hex. Hd.	1
5	71-3660	Pin - BBC Spring	1
6	71-3650	Link - Control	1
7	3256-23	Washer - Flat	2
8	65-5690	Bushing - Bellcrank	1
9	32128-44	Nut - Lock	1
10	66-0030	Bracket - Cable Support	1
11	32144-70	Screw - Cap Hex. Hd.	5
12	46-7040	Screw - Cap Hex. Hd.	1
13	65-5720	Bushing - BBC	1
14	66-0090	Lever - Brake	1
15	66-0350	Bushing - Flange	1
16	71-3640	Spring - Compression	1
17	65-5320	Rod - Brake Spring	1
18	65-5670	Bolt - Shoulder	1
19	3296-42	Nut - Lock	2
20	65-5740	Belt - BBC	1
21	65-5070	Hub - Brake Plate	1

Ref. No.	Part No.	Description	No. Used
22	65-5780	Brake Plate Assembly	1
23	65-5380	Washer	1
24	11-0580	Screw - Cap Hex. Hd.	1
25	321-13	Screw - Cap Hex. Hd.	2
26	65-5130	Hub - Idler Pulley	2
27	46-5650	Idler Pulley Assembly	1
28	253-151	Seal - V-Ring	1
29	42-3190	Screw - BBC	2
30	52-3480	Dampner - Vibration	2
31	65-5330	Screen - BBC	1
32	42-0910	Cup - Anti Scalp	1
33	54-9190	Nut - Flange Lock	2
34	62-7700	Blade - 21"	1
35	62-4280	Spacer - Blade	1
36	3296-33	Nut - Lock	1
37	65-5200	Cover - BBC	1
38	42-6890	Hub Assembly	1
39	62-3890	Drum - Brake	1
40	65-5300	Flywheel - BBC	1
41	62-7560	Pulley - Engine	1
42	3257-3	Key - Woodruff	1

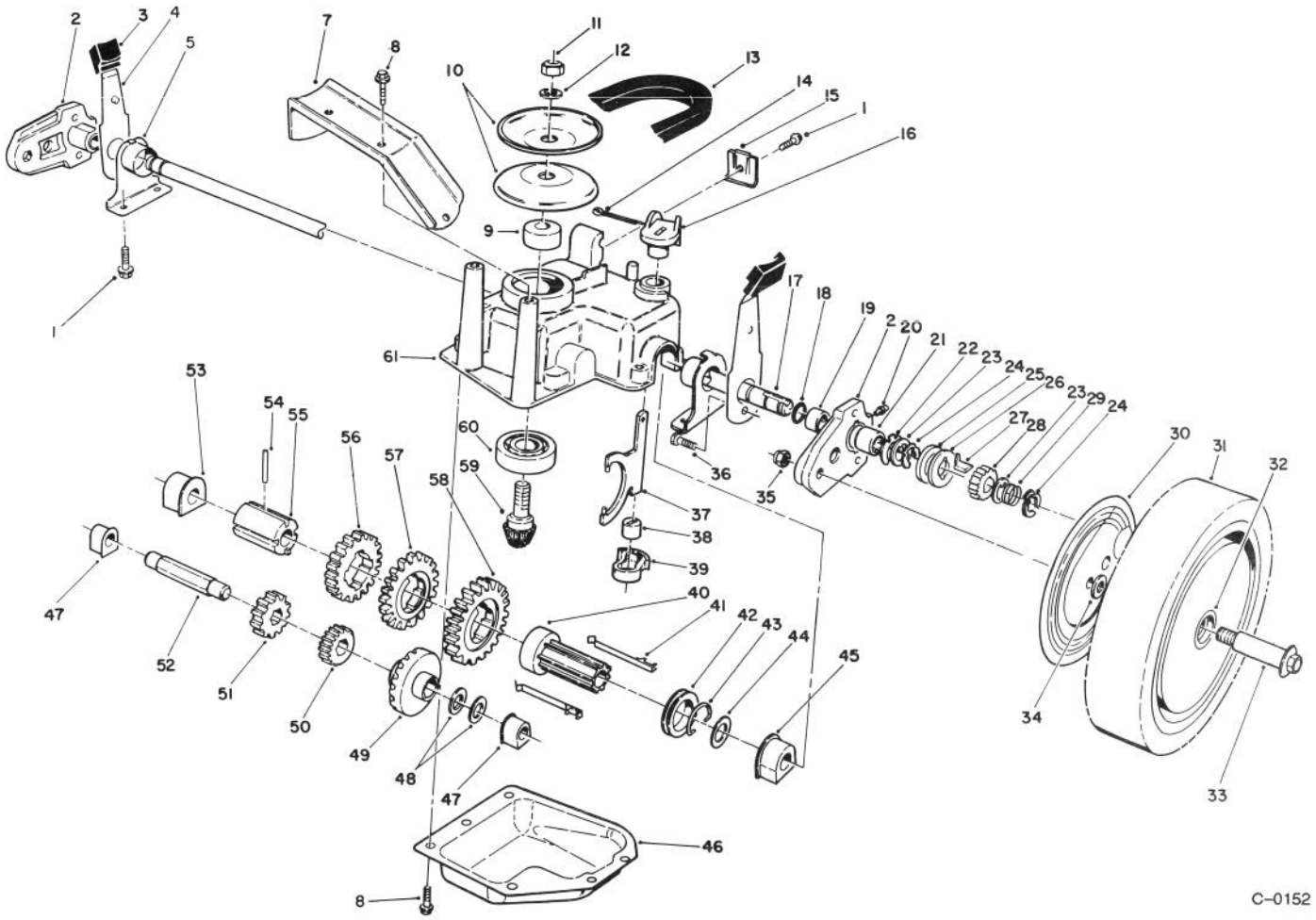

GEAR CASE ASSEMBLY

Ref. No.	Part No.	Description	No. Used
1	32144-70	Screw - Hex. Washer Hd.	5
2	65-5040	Pivot Arm Assembly (Incl. Ref. #19-21)	2
3	25-7740	Knob - Arm	2
4	65-5440	Spring Arm Assembly	2
5	66-0360	Cap - End	2
7	65-5190	Bracket - Belt Guide	1
8	49-2040	Screw - Self Tapping	8
9	62-6660	Spacer	1
10	60-8840	Pulley - Half	2
11	3296-5	Nut - Lock	1
12	3256-24	Washer - Flat	1
13	66-0210	V-Belt	1
14	3272-5	Pin - Cotter	1
15	66-0240	Clamp - Cable	1
16	66-0250	Lever - Shift	1
17	65-4770	Shaft - Output	1
18	237-153	Seal - O-Ring	2
19	47-2900	Bushing - Sleeve	2
20	302-56	Fitting - Grease	2
21	48-2060	Bearing -Needle	2
22	65-4730	Washer - Thrust (Inner)	2
23	65-4740	Washer - Thrust (Keyed)	4

Ref. No.	Part No.	Description	No. Used
24	65-2720	Ring - Retaining	4
25	65-4710	Ring - Friction	2
26	65-4760	Washer -Clutch	2
27	66-6050	Key - Rocking (L.H.)	1
*	66-6040	Key - Rocking (R.H.)	1
28	65-4750	Pinion	2
29	65-4720	Spring - Compression	2
30	63-5270	Cover - Wheel	2
31	11-9519	Wheel Tire & Gear Assy. (Incl. Ref. #32)	2
32	27-6250	Bushing - Wheel	4
33	27-6231	Bolt - Wheel	2
34	40-1940	Washer - Wheel Bolt	4
35	52-3620	Nut - Lock	2
36	65-5220	Screw - Cap Socket Hd.	2
37	60-8870	Yoke - Shift	1
38	29-9570	Bushing - Yoke	1
39	60-8810	Retainer - Shift Fork	1
40	60-8780	Sleeve - Shift Key	1
41	65-5230	Key - Shift	2
42	60-8760	Collar - Shift	1
43	65-5250	Clip - Spring	1
44	36-4780	Washer - Thrust	1

*Not Illustrated

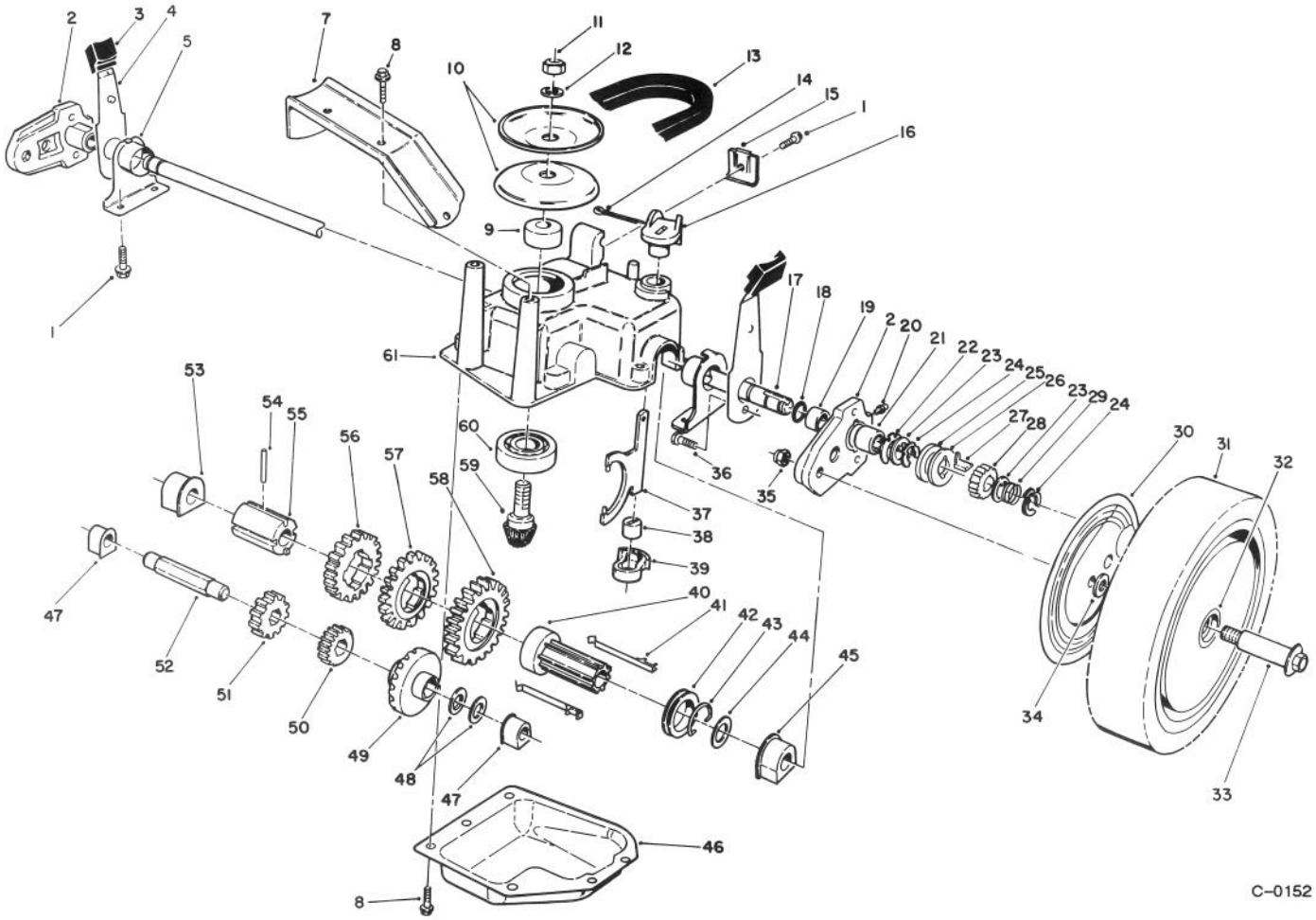

GEAR CASE ASSEMBLY (Continued)

Ref. No.	Part No.	Description	No. Used
45	60-8770	Bushing - Output Shaft	1
46	60-8730	Cover - Gear Case	1
47	60-8750	Bushing - Intrmdt. Shaft	2
48	36-4791	Washer - Thrust	2
49	55-3760	Gear - Pinion 15T	1
50	55-3780	Gear - Pinion 20T	1
51	55-3800	Gear - Pinion 25T	1
52	60-8800	Shaft - Intermediate	1
53	60-8850	Bushing - Output Shaft	1

Ref. No.	Part No.	Description	No. Used
54	32121-120	Pin - Coil	1
55	60-8790	Sleeve - Gear	1
56	55-3810	Gear - 39T (3rd Gear)	1
57	55-3790	Gear - 44T (2nd Gear)	1
58	55-3770	Gear - 49T (1st Gear)	1
59	60-8890	Pinion - Bevel	1
60	38-7820	Bearing - Ball	1
61	60-8710	Case - Gear (Upper)	1
*	62-6672	Gear Case Assy. Complete	1

*Not Illustrated

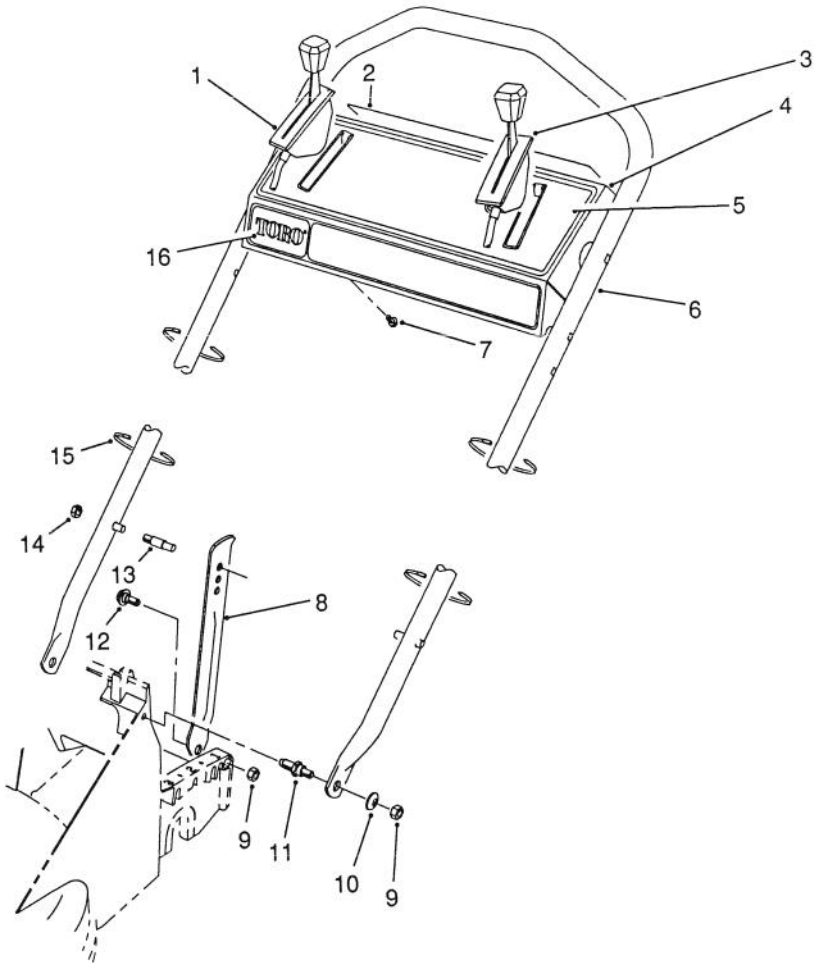

C-0173

HANDLE ASSEMBLY

Ref. No.	Part No.	Description	No. Used
1	65-5530	Control - Ground Speed Bend Type #3 Sheath Lg. 51-1/4" Wire Lg. 2-1/8"	1
2	63-9060	Decal - Danger	1
3	66-0231	Control - Throttle Bend Type #1 Sheath Lg. 43-3/4" Wire Lg. 2-5/8"	1
4	13-6269	Panel - Control (Incl. Ref. #2, 5 & 16)	1
5	63-9030	Decal - Instruction	1

Ref. No.	Part No.	Description	No. Used
6	66-0320	Handle	1
7	32104-76	Screw - Self Tapping	5
8	65-5730	Latch - Handle	2
9	3296-29	Nut - Lock	4
10	3256-23	Washer - Flat	2
11	66-0450	Screw - Shoulder Stud	2
12	66-0440	Screw - Shoulder	2
†13	49-2750	Pin - Handle	2
†14	3296-47	Nut - Lock	2
15	3290-378	Tie - Cable	4
16	66-1770	Decal - TORO	1

*Not Illustrated
†Service Replacement Parts

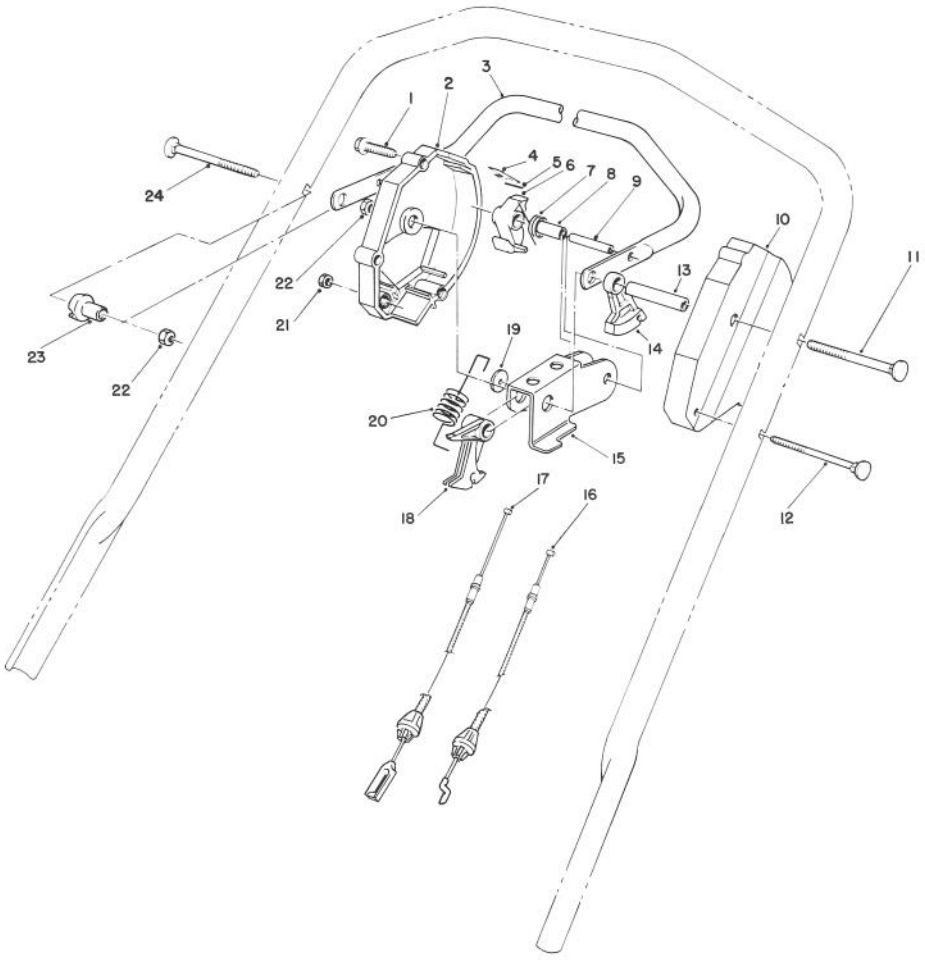

C-0153

TRACTION CONTROL ASSEMBLY

Ref. No.	Part No.	Description	No. Used
1	46-7040	Screw - Hex. Washer Hd.	3
2	66-0160	Housing - Control R.H.	1
3	52-7430	Control Bar Assembly	1
4	52-7410	Spring - Leaf	1
5	57-6290	Pin - Insert	1
6	46-5530	Hook - Control	1
7	46-5510	Spring - Torsion	1
8	46-5550	Bushing - Sleeve	1
9	32121-9	Pin - Coil	1
10	46-5460	Housing - Control (L.H.)	1
11	17-9425	Screw - Handle	1
12	46-6431	Screw - Handle	1

Ref. No.	Part No.	Description	No. Used
13	46-5590	Spacer	1
14	46-5520	Lever - Traction	1
15	66-0180	Rocker	1
16	65-5520	Cable - Traction	1
17	66-0730	Cable - Clutch	1
18	46-5540	Lever - Cable	1
19	66-0170	Washer - Nylon	1
20	66-0190	Spring - Detent	1
21	3296-8	Nut - Lock	1
22	3296-58	Nut - Lock	2
23	66-0330	Support - Spacer	1
24	17-9426	Screw - Handle	1

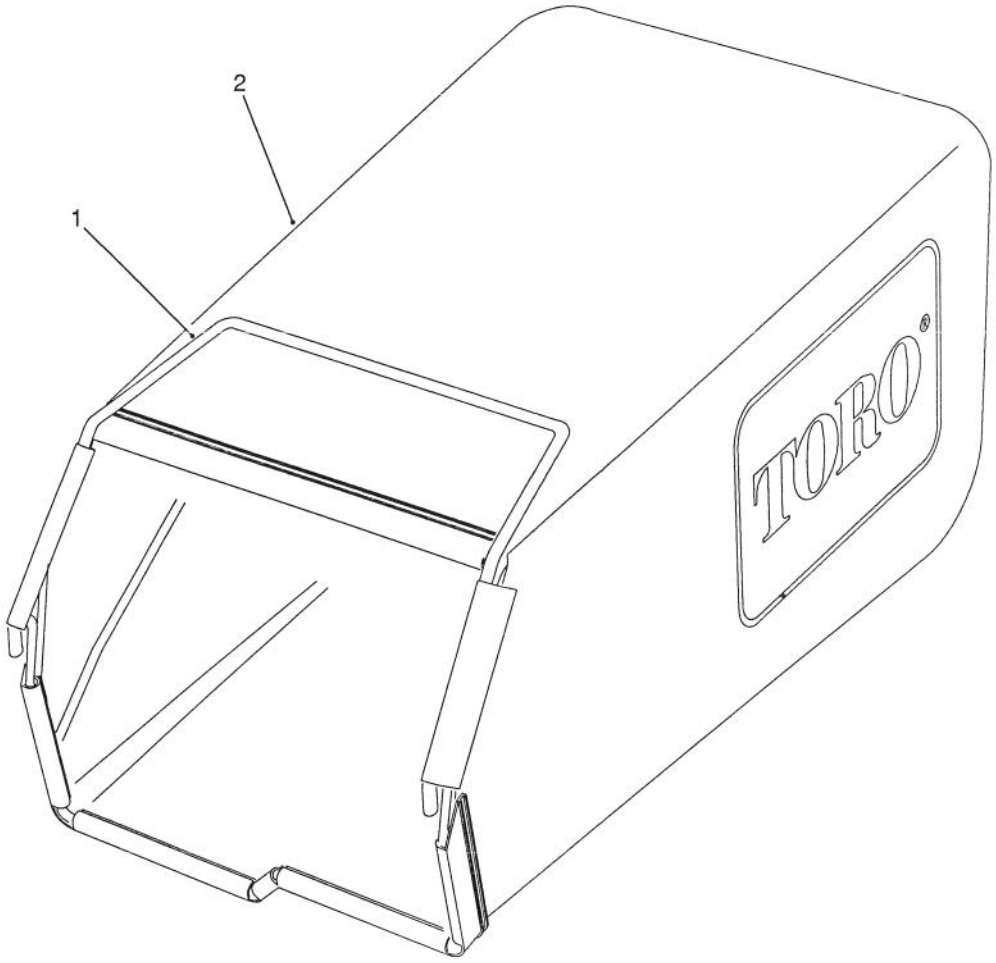

C-0168

GRASS BAG ASSEMBLY

Ref. No.	Part No.	Description	No. Used
1	65-5540	Frame - Grass Bag	1

Ref. No.	Part No.	Description	No. Used
2	66-0010	Bag	1

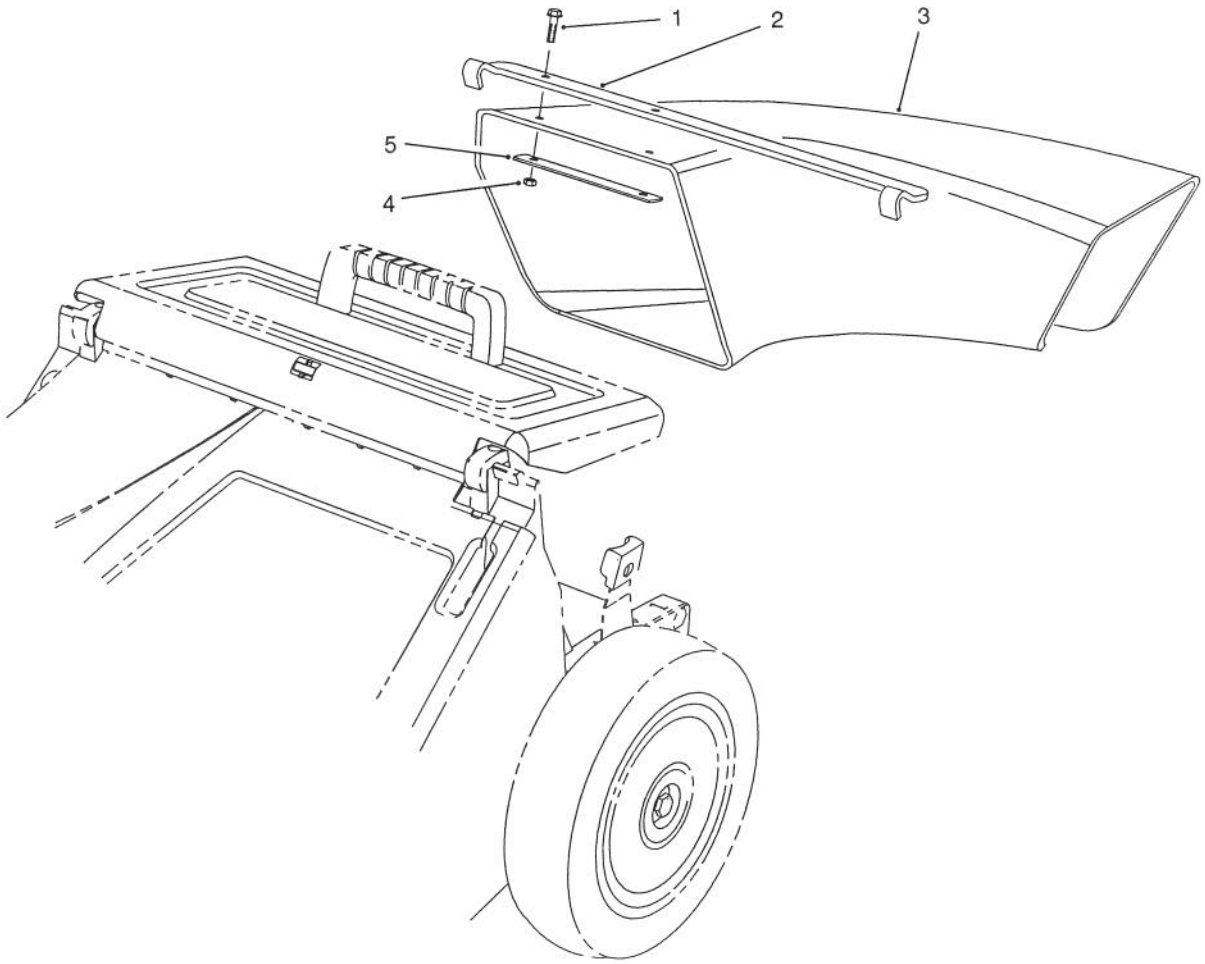

C–0169

SIDE DISCHARGE CHUTE MODEL NO. 59112 (Optional)

Ref. No.	Part No.	Description	No. Used
1	3290–126	Screw – Hex. Washer Hd.	2
2	66–0070	Bracket – Chute Hanger	1
3	65–5240	Chute – Discharge	1

Ref. No.	Part No.	Description	No. Used
4	3296–12	Nut – Lock	2
5	66–0060	Plate – Stress	1

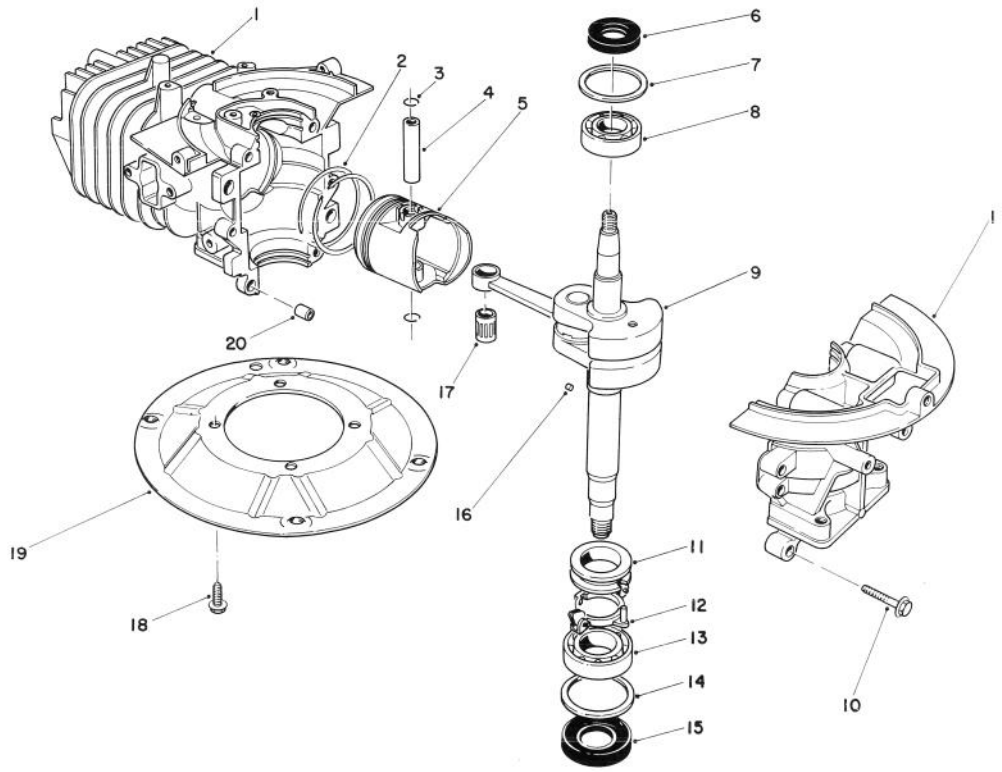

T-0663

CRANKSHAFT ASSEMBLY (Engine No. 47PJ8)

Ref. No.	Part No.	Description	No. Used
1	81-2800	Crankcase/Cylinder Assy.	1
2	81-0590	Piston Ring Set	1
3	81-0620	Circlip	2
4	81-0600	Pin - Wrist	1
5	81-0580	Piston - 58mm	1
6	81-0720	Seal - Oil Upper	1
7	81-0710	Washer - Thrust Upper	1
8	81-0690	Bearing - Upper 20mm	1
9	81-4670	Crankshaft/Connecting Rod Assembly	1
10	81-0540	Bolt	6

Ref. No.	Part No.	Description	No. Used
11	81-0770	Spacer - Governor	1
12	81-0750	Bracket - Governor Arm	1
13	81-0700	Bearing - Lower 25mm	1
14	81-0730	Washer - Thrust Lower	1
15	81-0740	Seal - Oil Lower	1
16	81-0760	Pin - Crankshaft	1
17	81-0610	Bearing - Wrist Pin	1
18	81-0570	Bolt	4
19	81-0560	Plate - Mounting	1
20	81-0520	Pin - Crankcase	2
*	12-7719	Short Block (Model 47PJ8)	1

*Not Illustrated

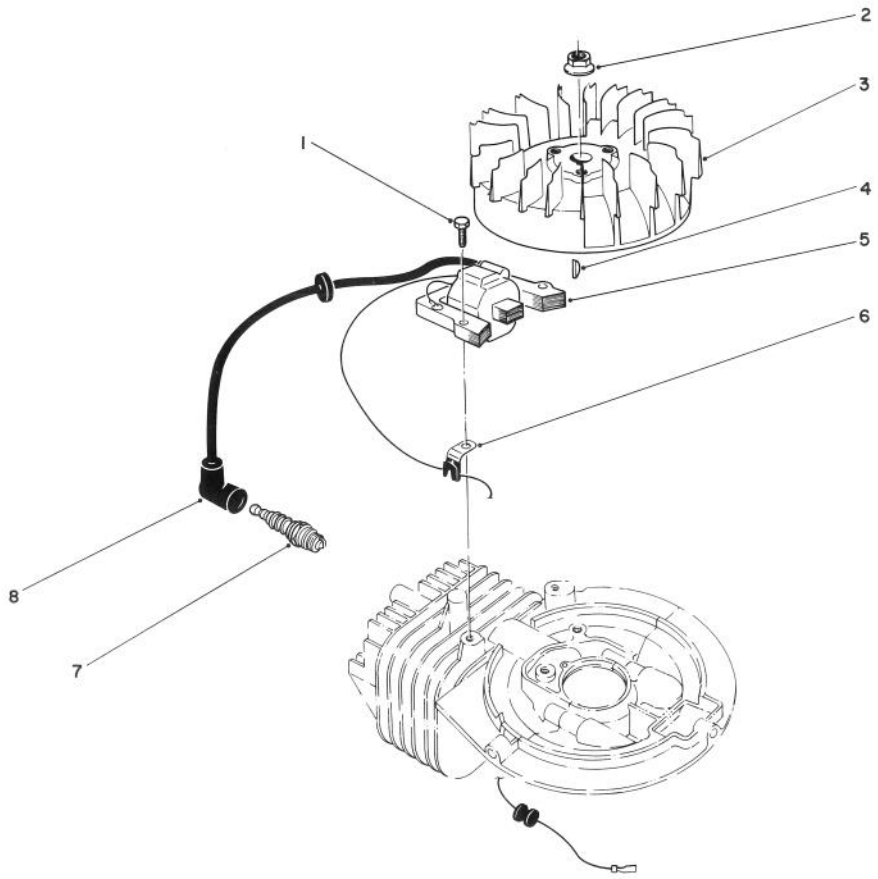

C–0176

FLYWHEEL & MAGNETO ASSEMBLY
(Engine Model No. 47PJ8)

Ref. No.	Part No.	Description	No. Used
1	81–5680	Screw – Cap Hex. Hd	2
2	81–1330	Nut	1
3	81–2810	Flywheel – Magneto	1
4	81–2370	Key – Flywheel	1
5	81–2820	Coil/Ignition Assembly	1

Ref. No.	Part No.	Description	No. Used
6	81–1480	Clamp	1
7	81–0181	Spark – Plug	1
8	81–1500	Cover – Spark Plug	1
*	41–7650	Puller – Flywheel	1

*Not Illustrated

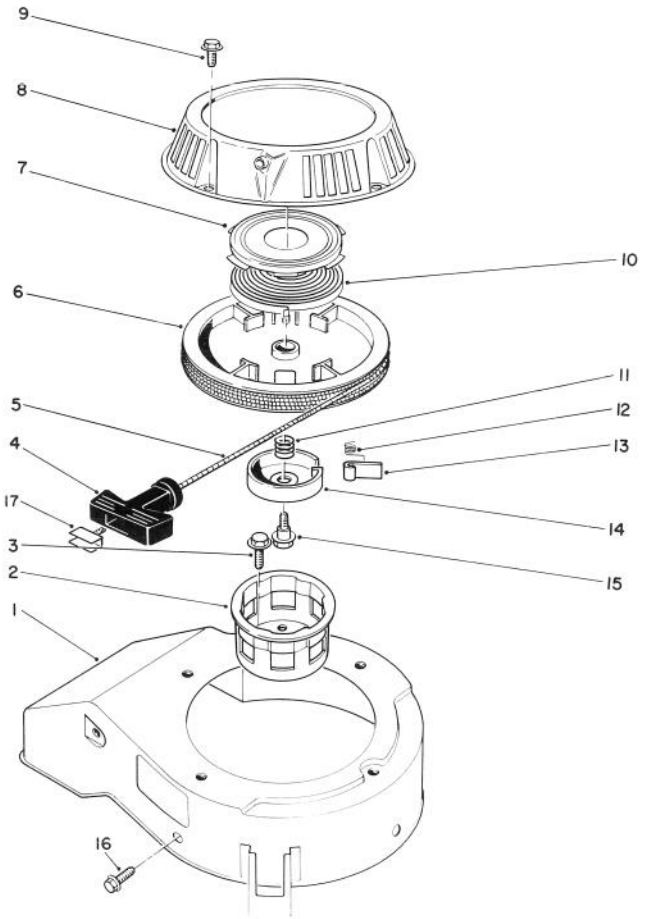

T-0668

RECOIL ASSEMBLY
(Engine Model No. 47PJ8)

Ref. No.	Part No.	Description	No. Used
1	81-2070	Cover - Cooling Fan	1
2	81-1290	Cup - Starter Pulley	1
3	81-1300	Bolt	3
4	81-1630	Handle - Recoil	1
5	81-1270	Rope	1
6	81-1210	Reel - Rope Pulley	1
7		Retainer - Recoil Spring	1
8	81-2090	Case - Recoil	1
9	81-1280	Bolt	4
10		Spring - Recoil	1
11	81-1240	Spring - Compression	1

Ref. No.	Part No.	Description	No. Used
12	81-1220	Spring - Dog	1
13	81-1230	Dog	1
14	81-1250	Retainer - Dog	1
15	81-1260	Bolt - Shoulder	1
16	81-1170	Bolt - Self Tapping	3
17	81-5760	Insert - Recoil Handle	1
*	81-5480	Recoil Starter Assembly (Incl. Ref. #4-8 & 10-17)	1
*	81-2300	Spring & Retainer Assembly (Incl. Ref. #7 & 10)	1

*Not Illustrated

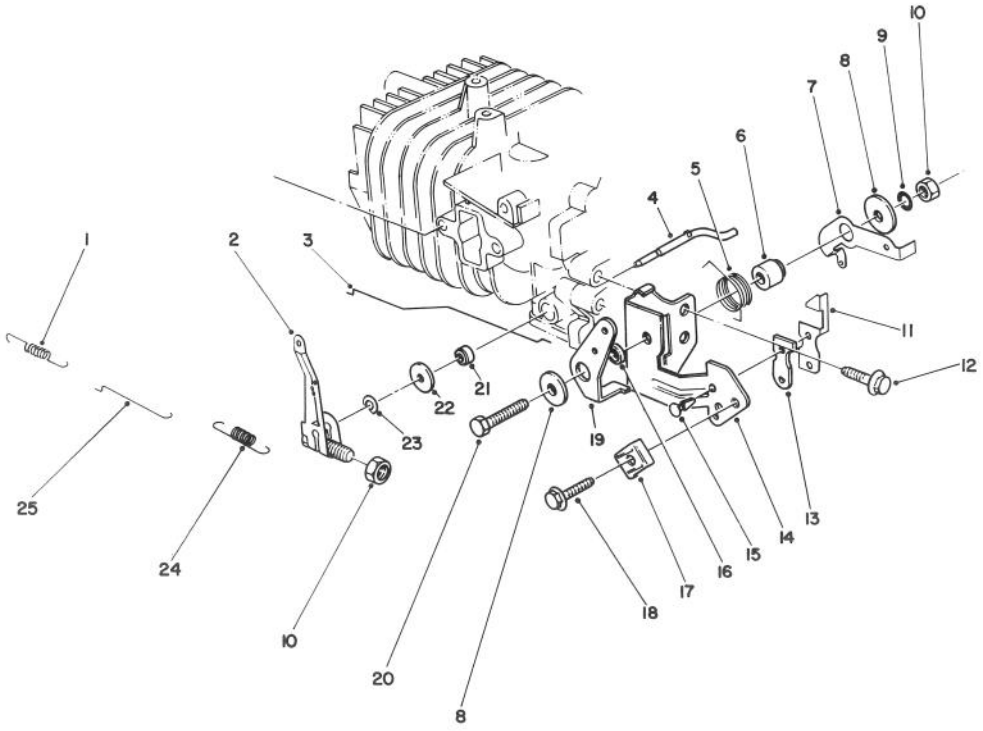

C-0177

GOVERNOR ASSEMBLY
(Engine No. 47PJ8)

Ref. No.	Part No.	Description	No. Used
1	81-0920	Spring - Carburetor Rod	1
2	81-5420	Governor Arm/Bolt Assy.	1
3	81-5410	Rod - Choke	1
4	81-0840	Shaft - Governor	1
5	81-2460	Spring - Choke Lever	1
6	81-1770	Spacer - Governor Lever	1
7	81-2850	Lever - Governor	1
8	81-1750	Washer - Choke Lever	2
9	81-1450	Washer - Lock	1
10	81-0900	Nut	2
11	81-1840	Terminal - Kill Switch	1
12	81-1170	Bolt - Self Tapping	1
13	81-1830	Insulator - Kill Switch	1

Ref. No.	Part No.	Description	No. Used
14	81-2420	Bracket - Throttle	1
15	81-1850	Rivet - Kill Switch	2
16	81-2470	Spacer - Choke Lever	1
17	81-2430	Clamp - Cable	1
18	50-0130	Bolt - Cable Clamp	1
19	81-1710	Lever - Choke	1
20	81-1730	Bolt - Throttle Bracket	1
21	81-0850	Seal - Governor Shaft	1
22	81-0860	Washer	1
23	81-0870	Ring - Retaining	1
24	81-2830	Spring - Governor	1
25	81-0910	Rod - Carburetor	1

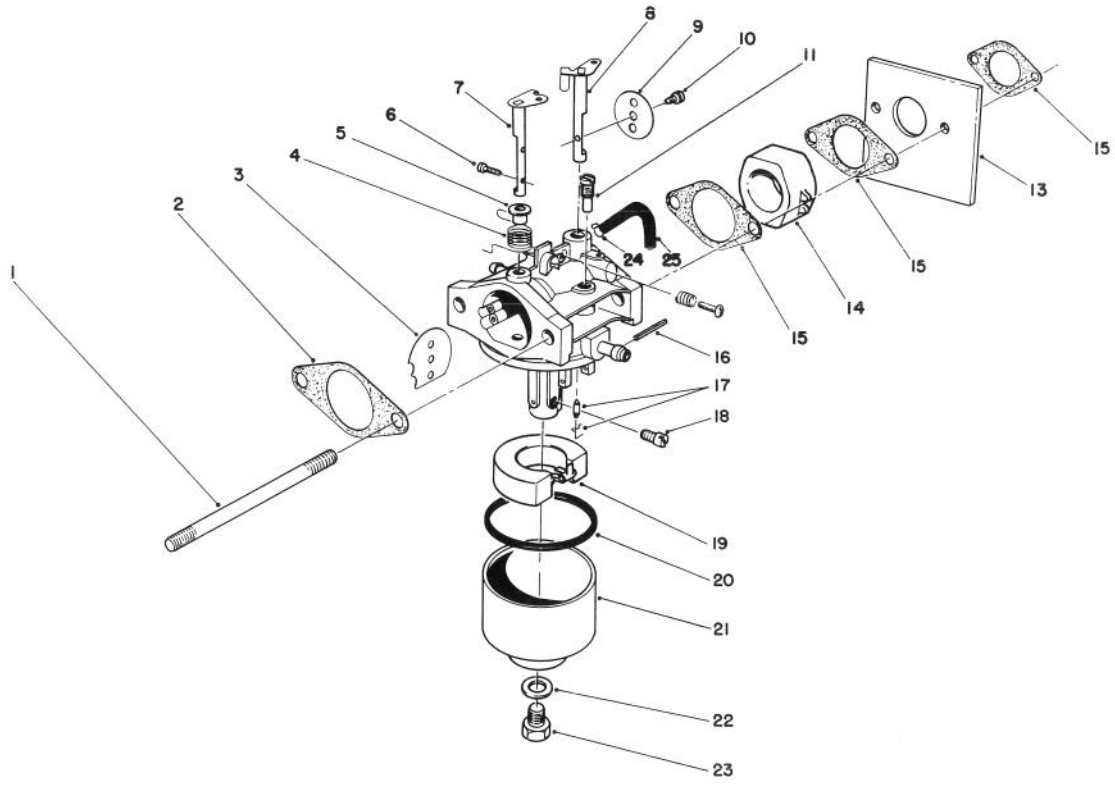

T-0665

CARBURETOR ASSEMBLY (Engine No. 47PJ8)

Ref. No.	Part No.	Description	No. Used
1	81-5450	Stud - Carburetor Bolt	2
2	81-0090	Gasket - Air Cleaner	1
3	81-0240	Valve - Choke	1
4	81-0230	Spring - Choke	1
5	81-0220	Bushing - Choke Valve	1
6	81-2160	Screw	2
7	81-1950	Shaft - Choke	1
8	81-0250	Shaft - Throttle	1
9	81-0260	Valve - Throttle	1
10	81-0270	Screw - Throttle Valve	1
11	81-1030	Jet - Pilot (#40)	1
13	81-5490	Shield - Carburetor	1
14	81-5440	Insulator - Carburetor	1
15	81-0780	Gasket	3
16	81-5600	Pin	1

Ref. No.	Part No.	Description	No. Used
17	81-4910	Needle Valve/Spring Wire	1
18	81-1060	Jet - Main (#75)	1
*	81-2340	Jet - Main (#72.5) High Alt. (Above 6000 ft.) Optional	1
19	81-0970	Float	1
20	81-1010	Gasket - Float Bowl	1
21	81-5660	Bowl - Float	1
22	81-1020	Gasket - Float Bowl Drain	1
23	81-5670	Screw - Float Bowl Drain	1
24	81-5460	Clamp - Vent Tube	1
25	81-5470	Tube - Vent	1
*	12-6379	Carburetor Kit (Incl. Ref. #2, 15, 17, 20 & 22)	1
*	81-5740	Carburetor Assy. Complete	1

*Not Illustrated

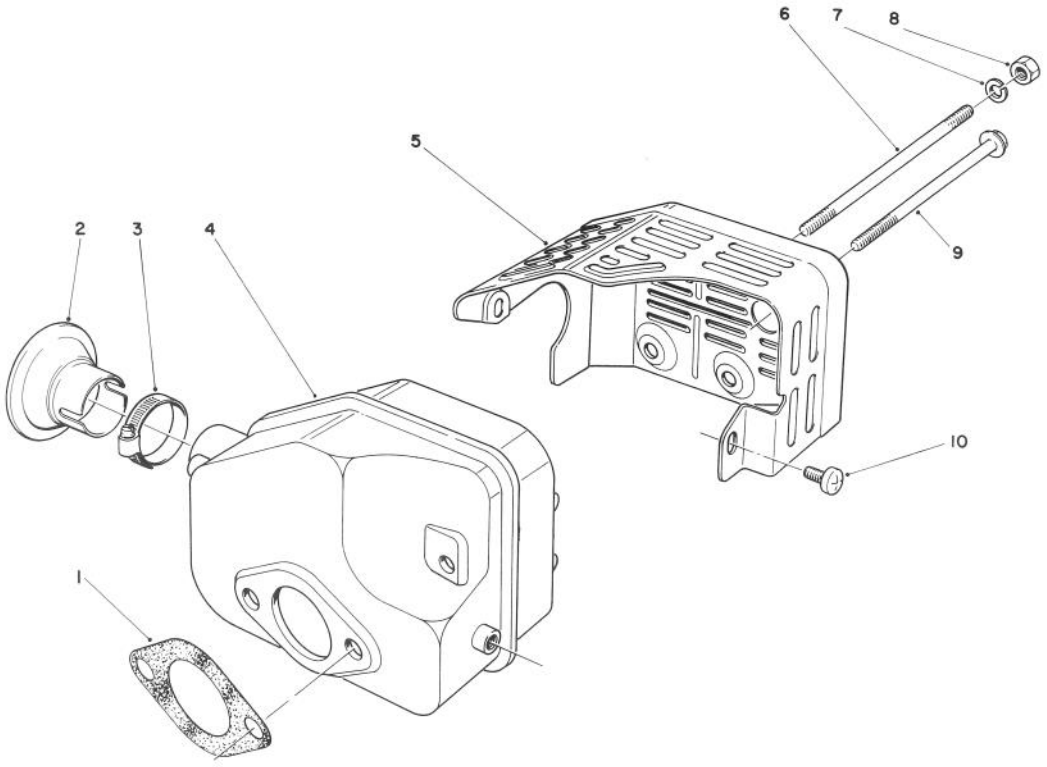

T-0667

MUFFLER ASSEMBLY
(Engine No. 47PJ8)

Ref. No.	Part No.	Description	No. Used
1	81-1080	Gasket - Muffler	1
2	81-0200	Spark Arrester (Optional)	1
3		Clamp	1
4	81-1090	Muffler	1
5	81-2450	Cover - Muffler	1

Ref. No.	Part No.	Description	No. Used
6	81-1100	Bolt	2
7	81-1120	Washer - Lock	2
8	81-1110	Nut	2
9	81-1150	Bolt - Self Tapping	1
10	81-1140	Screw - Phillips Hd	2

†Obtain Locally

PRODUCT CHANGES

In an effort to make improvements available to TORO owners as quickly as possible, minor changes are incorporated into Toro's products from time to time that do not become immediately shown in the Parts Catalog. If such a change has been made in your unit, which is not reflected in your manual, see your TORO Distributor or his Authorized TORO Service Dealer for information and part numbers.

IDENTIFICATION AND ORDERING

MODEL AND SERIAL NUMBERS

The Lawnmower has two identification numbers; a model number and a serial number. The two numbers are stamped on a decal which is located on the rear of the housing. In any correspondence concerning the lawnmower, supply model and serial numbers to assure that correct information and replacement parts are obtained.

To order replacement parts from an Authorized TORO Service Dealer, supply the following information:
1. Model and serial number of the lawnmower.
2. Part number, description, and the quantity of part(s) desired.

NOTE: Do not order by reference number if a parts catalog is being used; use the PART NUMBER.

COUNTRIES OTHER THAN THE UNITED STATES OR CANADA

Customers who have purchased TORO products exported from the United States or Canada should contact their Toro Distributor (Dealer) to obtain guarantee policies for your country, province or state. If for any reason you are dissatisfied with your Distributor's service or have difficulty obtaining guarantee information, contact the TORO importer. If all other remedies fail, you may contact us at The Toro Company.

MAINTENANCE RECORD

Date								

MAINTENANCE RECORD

Date								

MAINTENANCE RECORD

Date								