FORM NO. 3313-790

TORO®

MODEL NO. 38000-9000001 & UP

PARTS CATALOG

TORO S-120 SNOWTHROWER

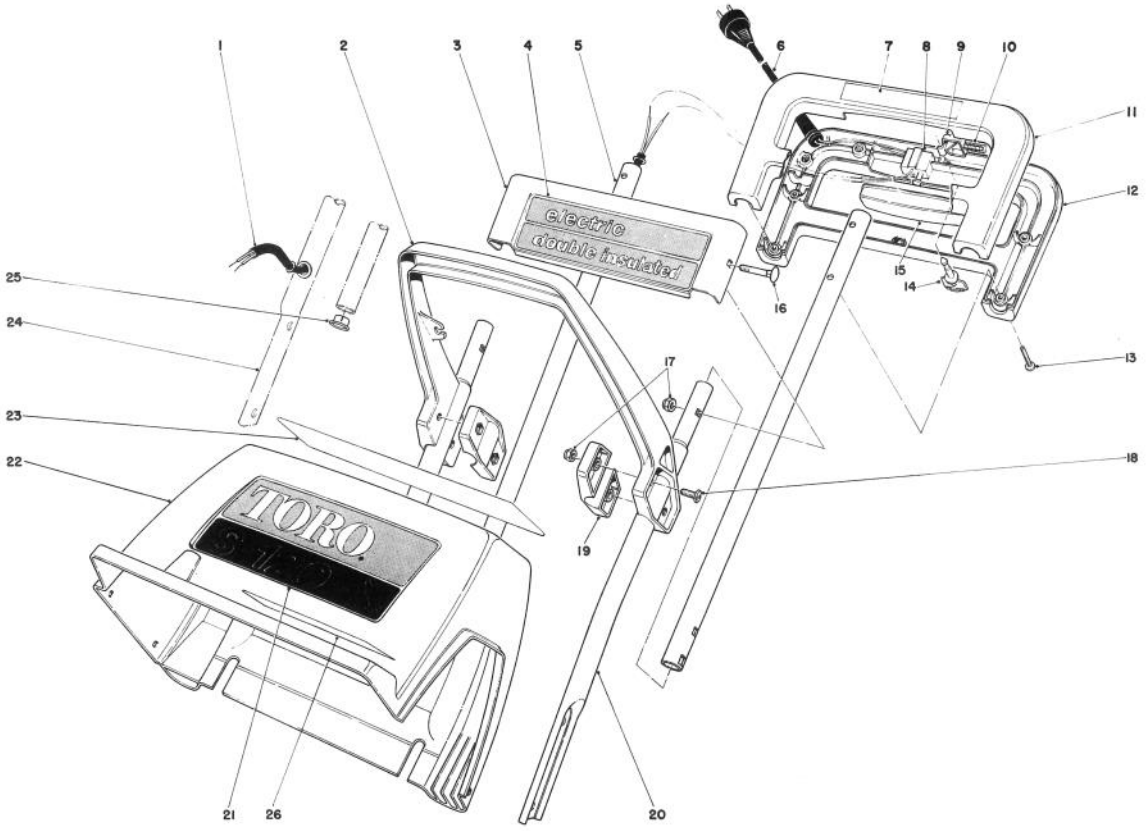

C-0252-89

HANDLE ASSEMBLY

Ref. No.	Part No.	Description	No. Used
1	61-8820	Wire Harness	1
2	37-6260	Middle Handle	1
3	37-6411	Escutcheon Plate	1
4	37-6480	Decal — Electric	1
5	56-6520	Upper Tube	2
6	38-8390	Cord Supply	1
7	38-4590	Decal — Handle	1
8	36-8340	Switch	1
9	37-8000	Lockout — Switch	1
10	37-7990	Spring Compression	1
11	39-2460	Handle — Upper Control	1
12	39-2470	Handle — Lower Control	1
13	32104-121	Screw	8

Ref. No.	Part No.	Description	No. Used
14	38-8310	Key	1
15	37-8010	Switch Bar	1
16	37-6320	Carriage Bolt	2
17	3296-42	Nut	6
18	3290-133	Screw Round Hd.	4
19	37-6190	Clamp — Middle Handle	2
20	56-6540	Handle — Lower L.H.	1
21	37-6470	Decal — Toro S-120	1
22	61-8700	Shroud — S-120	1
23	64-7000	Decal — UL	1
24	64-8570	Handle — Lower R.H.	1
25	64-8910	Tube — Bushing	1
26	64-7010	Decal — Danger	1

©The TORO Company — 1989

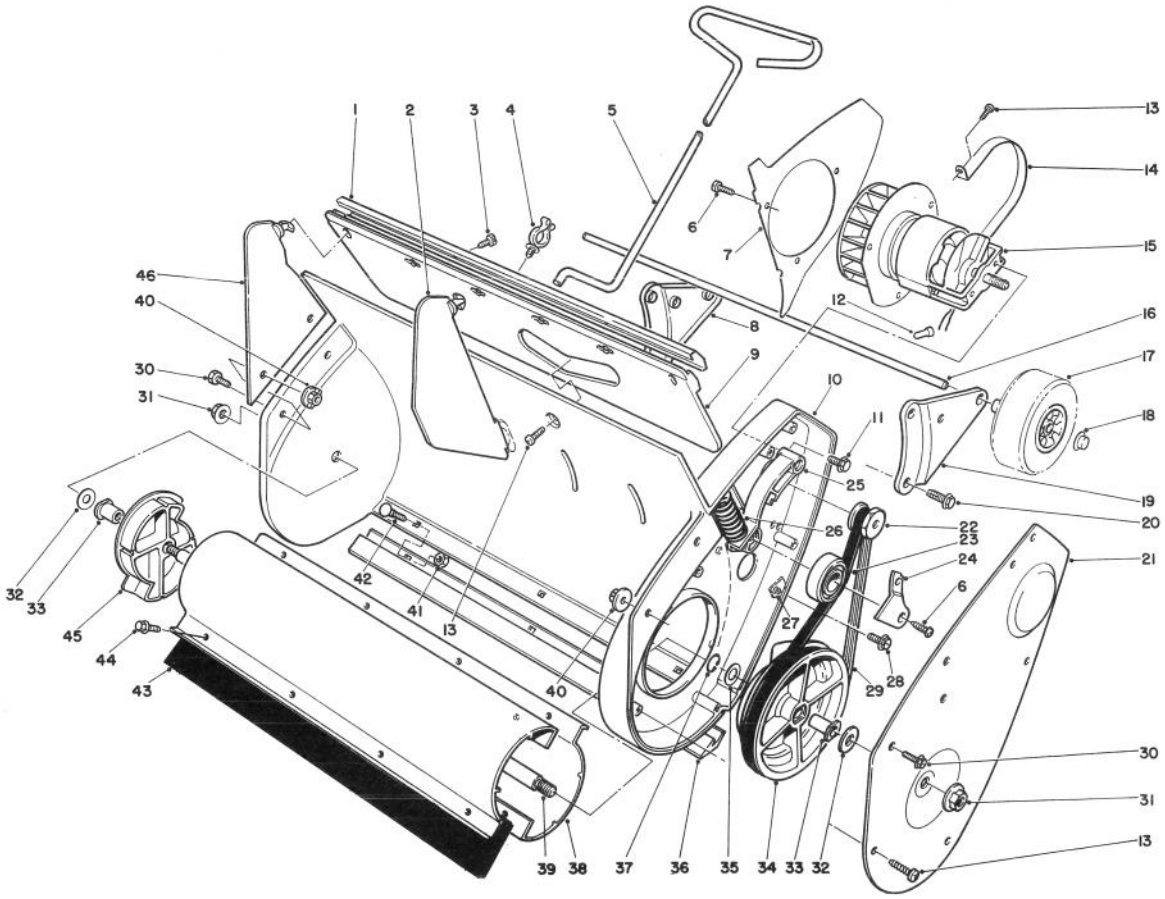

C-0253-89

LOWER MAIN FRAME ASSEMBLY

Ref. No.	Part No.	Description	No. Used
1	37-6340	Moulding	1
2	61-8830	Vane — Inner	4
3	32104-77	Screw	2
4	64-8590	Wire Keeper	1
5	61-8770	Rod — Vane Adjustment	1
6	32104-130	Screw — Self Tapping Phillips Hd.	5
7	61-8720	Air Baffle	1
8	39-0680	Wheel Bracket R.H.	1
9	61-8760	Vane Mount	1
10	61-8710	Housing	1
11	321-2	Screw Hex Head Thread Forming	2
12	218-496	Wire Connector	2
13	32104-121	Screw	9
14	61-8870	Mount — Motor	1
15	61-4210	Motor	1
16	37-6460	Axle Shaft	1
17	37-5960	Wheel	2
18	32112-1	Push Nut	2
19	39-0690	Wheel Bracket L.H.	1
20	11-9760	Screw	6
21	61-8750	Cover — Belt Case	1
22	61-8840	Drive Pulley	1
23	61-8780	Ball Bearing	1

Ref. No.	Part No.	Description	No. Used
24	61-8790	Retainer — Idler Pulley	1
25	61-8740	Idler Arm	1
26	61-8880	Idler Spring	1
27	3290-171	Tinnerman Nut	3
28	32144-34	Screw	3
29	61-8800	Drive Belt	1
30	3290-321	Screw — Slotted Hex Washer Hd.	4
31	32128-25	Nut — Flange	2
32	39-5190	Thrust Washer	2
33	61-8850	Rotor Bushing	2
34	61-8730	Pulley — Driven	1
35	37-8080	Thrust Washer	1
36	38-8720	Scraper	1
37	32120-46	Retaining Ring	1
38	37-6371	Rotor	2
39	61-8860	Shaft Rotor	1
40	64-8980	Nut	1
41	32149-2	Nut	3
42	3229-11	Carriage Bolt	3
43	37-6391	Blade — Rotor	2
44	32144-64	Screw — Thread Forming	8
45	61-8890	End Cap Rotor	1
46	61-8810	Vane — Outer	2