FORM NO. 3313-791

TORO®

MODEL NO. 26642-9000001 & UP

PARTS CATALOG

21" S.P. REAR BAGGER

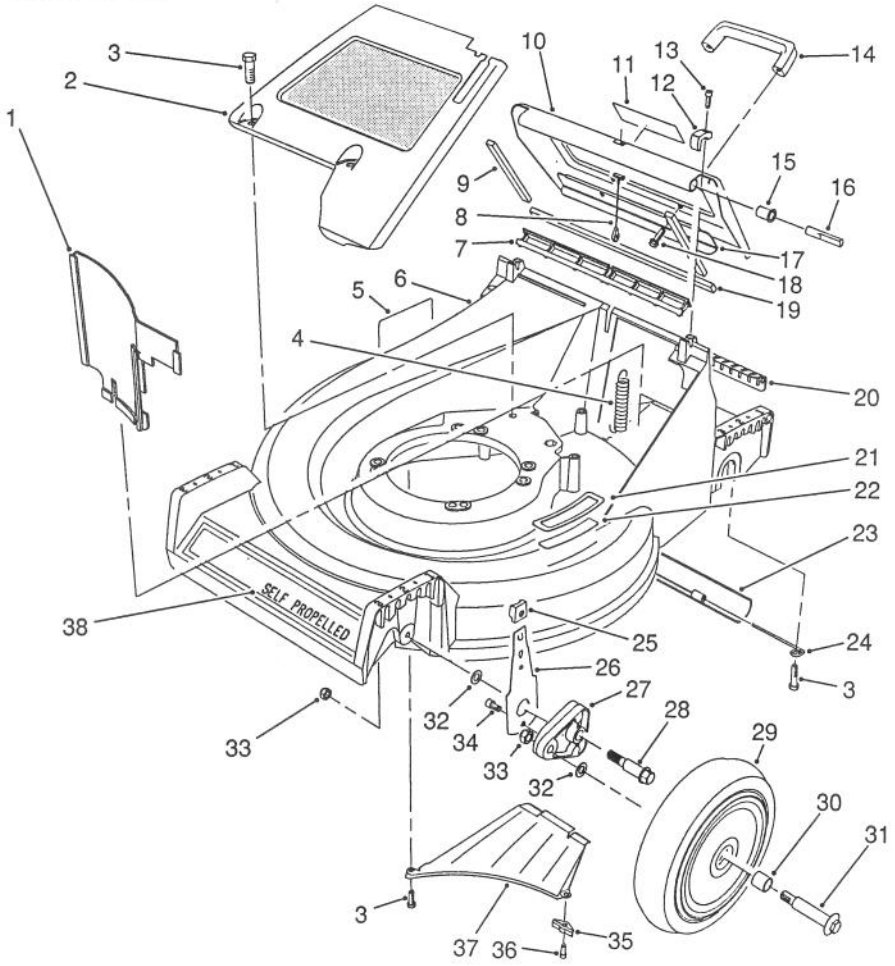

C-0250

HOUSING ASSEMBLY (Unit Serial No. 9000101 thru 9001577 and 9004801 & Up)

Ref. No.	Part No.	Description	No. Used
1	66-0020	Panel - Vertical	1
2	65-5660	Panel - Screen	1
3	32144-70	Screw - Cap Hex. Hd.	5
4	65-5360	Spring - Extension	1
5	43-8480	Decal - Danger	1
6	13-4689	21" Housing Assembly (Incl. Ref. #5, 21-22)	1
7	65-5160	Seal - Door	1
8	65-5370	Cable - Door	1
9	65-5480	Seal - Door Side	2
10	13-2189	Door - Discharge (Incl. Ref. #9, 11, 17 & 19)	1
11	63-9050	Decal - Warning	1
12	65-5140	Clamp - Hinge	2
13	65-5210	Screw - Hex. Socket Hd.	2
14	65-5100	Handle - Door	1

Ref. No.	Part No.	Description	No. Used
15	65-5460	Bushing - Door	2
16	65-5290	Pin - Hinge	2
17	66-0610	Brace - Door	1
18	46-8091	Screw - Handle	2
19	65-5490	Seal - Door (End)	1
20	65-5150	Cover - Access	1
21	66-0110	Pad - Step	1
22	46-7370	Decal - Step Pad	1
23	65-5350	Shield - Trailing	1
24	66-0150	Hanger - Shield (L.H.)	1
*	66-0140	Hanger - Shield (R.H.)	1
25	25-7740	Knob - Spring Arm	2
26	66-0540	Arm - Front Spring	2
27	66-0580	Arm - Front Pivot	2
28	66-0560	Screw - Shoulder	2

*Not Illustrated

©The TORO Company - 1989

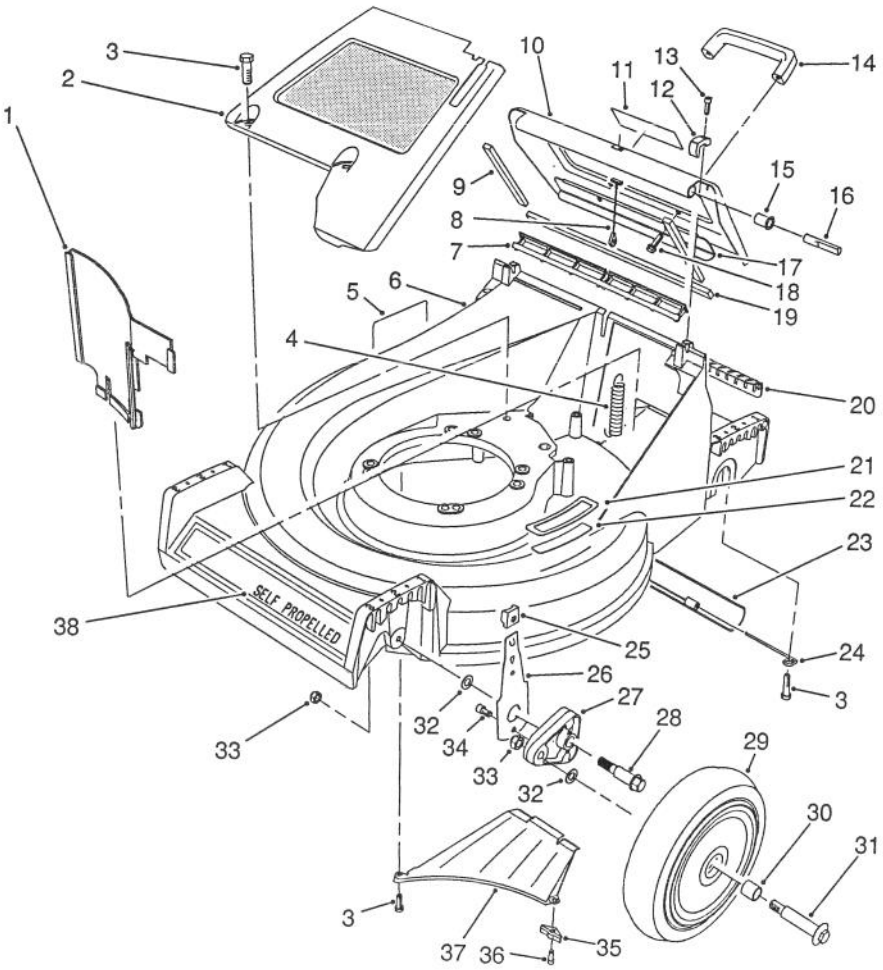

C-0250

HOUSING ASSEMBLY (Unit Serial No. 9000101 thru 9001577 and 9004801 & Up)(Continued)

Ref. No.	Part No.	Description	No. Used
29	11-9509	Wheel & Tire Assembly (Incl. Ref. #30)	2
30	27-6250	Bushing - Wheel	4
31	27-6231	Bolt - Wheel	2
32	40-1940	Washer - Wheel	4
33	52-3620	Nut - Lock	4

Ref. No.	Part No.	Description	No. Used
34	65-5220	Screw - Cap Socket Hd.	2
35	66-0640	Bracket - Discharge	1
36	65-5221	Screw - Bracket	1
37	65-5010	Ramp - Discharge	1
38	66-0480	Decal - 21"	1

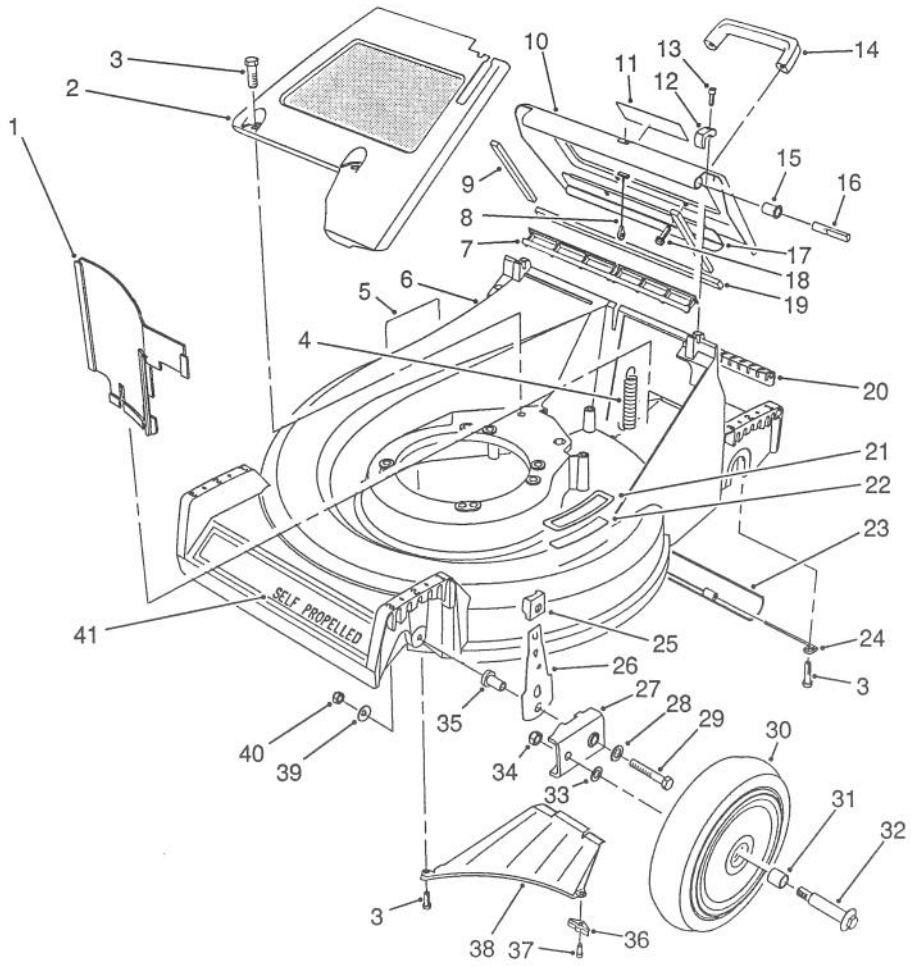

C-0251

HOUSING ASSEMBLY (Unit Serial No. 9001578 thru 9004800)

Ref. No.	Part No.	Description	No. Used
1	66-0020	Panel - Vertical	1
2	65-5660	Panel - Screen	1
3	32144-70	Screw - Cap Hex. Hd.	5
4	65-5360	Spring - Extension	1
5	43-8480	Decal - Danger	1
6	13-6639	21" Housing Assembly (Incl. Ref. #5, & 21-22)	1
7	65-5160	Seal - Door	1
8	65-5370	Cable - Door	1
9	65-5480	Seal - Door Side	2
10	13-2189	Door - Discharge (Incl. Ref. #9, 11, 17 & 19)	1
11	63-9050	Decal - Warning	1
12	65-5140	Clamp - Hinge	2
13	65-5210	Screw - Hex. Socket Hd.	2
14	65-5100	Handle - Door	1
15	65-5460	Bushing - Door	2
16	65-5290	Pin - Hinge	2
17	66-0610	Brace - Door	1
18	46-8091	Screw - Handle	2
19	65-5490	Seal - Door (End)	1
20	65-5150	Cover - Access	1
21	66-0110	Pad - Step	1

Ref. No.	Part No.	Description	No. Used
22	46-7370	Decal - Step Pad	1
23	65-5350	Shield - Trailing	1
24	66-0150	Hanger - Shield (L.H.)	1
*	66-0140	Hanger - Shield (R.H.)	1
25	25-7740	Knob - Spring Arm	2
26	66-0410	Arm - Front Spring	2
27	47-2940	Arm - Front Pivot	2
28	3256-2	Washer - Flat	2
29	322-2	Screw - Cap Hex. Hd.	2
30	11-9509	Wheel & Tire Assembly (Incl. Ref. #31)	2
31	27-6250	Bushing - Wheel	4
32	27-6231	Bolt - Wheel	2
33	40-1940	Washer - Wheel	4
34	52-3620	Nut - Lock	2
35	65-5080	Bushing	2
36	66-0640	Bracket - Discharge	1
37	65-5221	Screw - Bracket	1
38	65-5010	Ramp - Discharge	1
39	3290-456	Washer - Belleville	2
40	3296-29	Nut - Lock	2
41	66-0480	Decal - 21"	1

*Not Illustrated

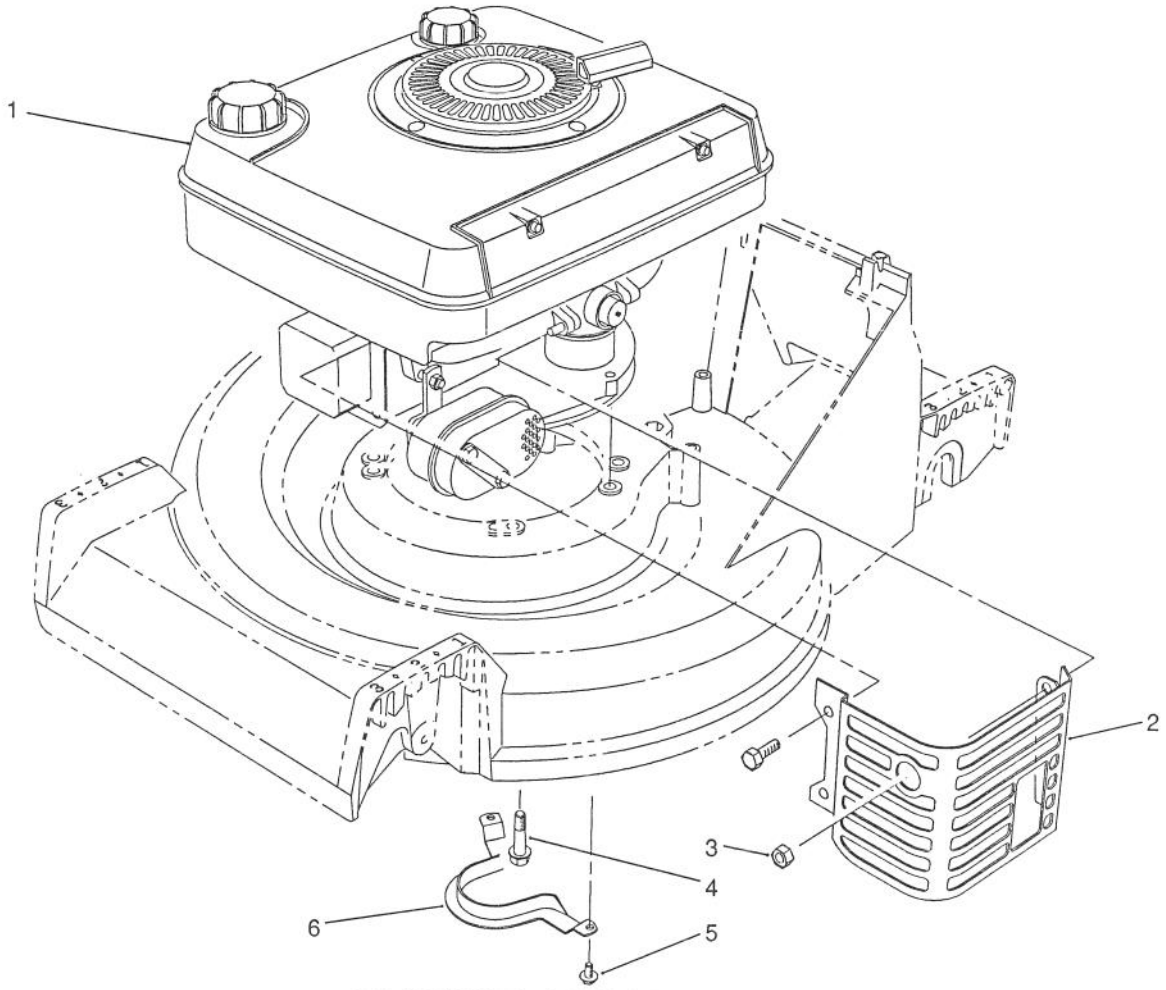

C-0254

ENGINE ASSEMBLY

Ref. No.	Part No.	Description	No. Used
†1		Engine - OHV (Tecumseh Model OVRM40 Type No. 42603	1
2	70-7720	Heat Shield - Muffler	1

Ref. No.	Part No.	Description	No. Used
3	32149-3	Nut - Lock	1
4	11-0590	Screw - Engine	3
5	32144-70	Screw - Hex. Flange Hd.	2
6	66-0570	Guide - Belt	1

†Obtain from your local Tecumseh dealer.

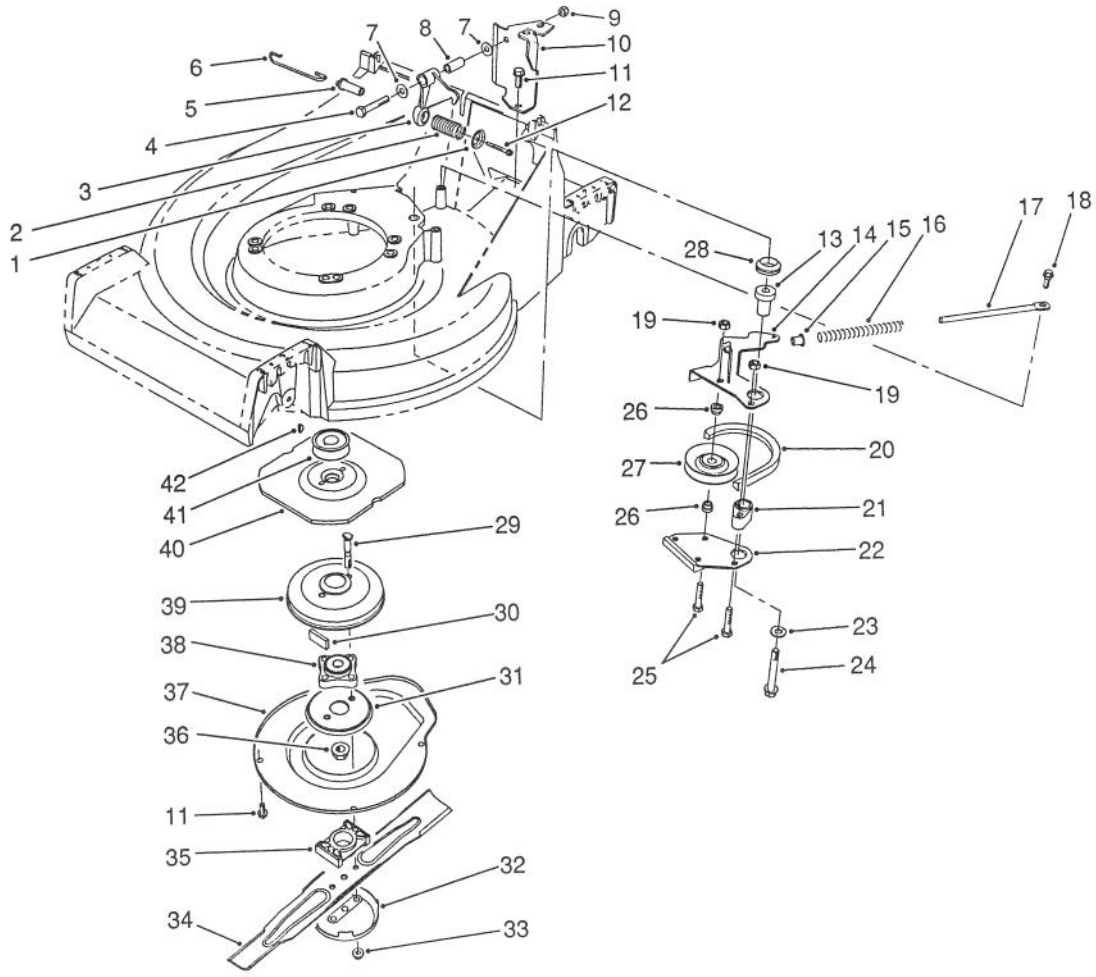

C-0182

BLADE BRAKE CLUTCH ASSEMBLY

Ref. No.	Part No.	Description	No. Used
1	65-5280	Retainer - Spring	1
2	71-3630	Spring - Compression	1
3	65-5700	Crank	1
4	322-21	Screw - Cap Hex. Hd.	1
5	71-3660	Pin - BBC Spring	1
6	71-3650	Link - Control	1
7	3256-23	Washer - Flat	2
8	65-5690	Bushing - Bellcrank	1
9	32128-44	Nut - Lock	1
10	66-0030	Bracket - Cable Support	1
11	32144-70	Screw - Cap Hex. Hd.	5
12	46-7040	Screw - Cap Hex. Hd.	1
13	65-5720	Bushing - BBC	1
14	66-0090	Lever - Brake	1
15	66-0350	Bushing - Flange	1
16	71-3640	Spring - Compression	1
17	65-5320	Rod - Brake Spring	1
18	65-5670	Bolt - Shoulder	1
19	3296-42	Nut - Lock	2
20	65-5740	Belt - BBC	1
21	65-5070	Hub - Brake Plate	1

Ref. No.	Part No.	Description	No. Used
22	65-5780	Brake Plate Assembly	1
23	65-5380	Washer	1
24	11-0580	Screw - Cap Hex. Hd.	1
25	321-13	Screw - Cap Hex. Hd.	2
26	65-5130	Hub - Idler Pulley	2
27	46-5650	Idler Pulley Assembly	1
28	253-151	Seal - V-Ring	1
29	42-3190	Screw - BBC	2
30	52-3480	Dampner - Vibration	2
31	65-5330	Screen - BBC	1
32	42-0910	Cup - Anti Scalp	1
33	54-9190	Nut - Flange Lock	2
34	62-7700	Blade - 21"	1
35	62-4280	Spacer - Blade	1
36	3296-33	Nut - Lock	1
37	65-5200	Cover - BBC	1
38	42-6890	Hub Assembly	1
39	62-3890	Drum - Brake	1
40	65-5300	Flywheel - BBC	1
41	62-7560	Pulley - Engine	1
42	3257-3	Key - Woodruff	1

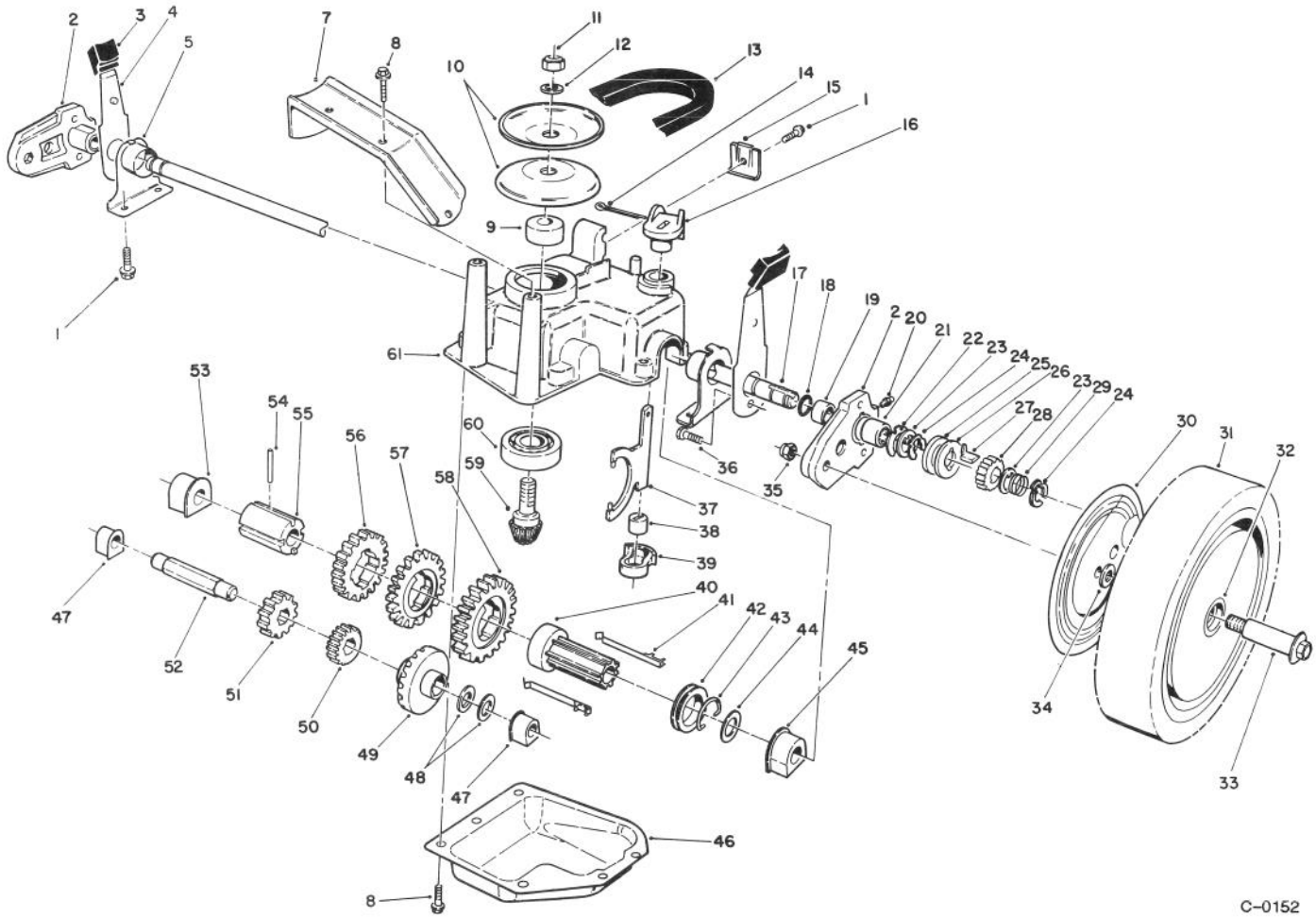

GEAR CASE ASSEMBLY

Ref. No.	Part No.	Description	No. Used
1	32144-70	Screw - Hex. Washer Hd.	5
2	65-5040	Pivot Arm Assembly (Incl. Ref. #19-21)	2
3	25-7740	Knob - Arm	2
4	65-5440	Spring Arm Assembly	2
5	66-0360	Cap - End	2
7	65-5190	Bracket - Belt Guide	1
8	49-2040	Screw - Self Tapping	8
9	62-6660	Spacer	1
10	60-8840	Pulley - Half	2
11	3296-5	Nut - Lock	1
12	3256-24	Washer - Flat	1
13	66-0210	V-Belt	1
14	3272-5	Pin - Cotter	1
15	66-0240	Clamp - Cable	1
16	66-0250	Lever - Shift	1
17	65-4770	Shaft - Output	1
18	237-153	Seal - O-Ring	2
19	47-2900	Bushing - Sleeve	2
20	302-56	Fitting - Grease	2
21	48-2060	Bearing -Needle	2
22	65-4730	Washer - Thrust (Inner)	2
23	65-4740	Washer - Thrust (Keyed)	4

Ref. No.	Part No.	Description	No. Used
24	65-2720	Ring - Retaining	4
25	65-4710	Ring - Friction	2
26	65-4760	Washer -Clutch	2
27	66-6050	Key - Rocking (L.H.)	1
*	66-6040	Key - Rocking (R.H.)	1
28	65-4750	Pinion	2
29	65-4720	Spring - Compression	2
30	63-5270	Cover - Wheel	2
31	11-9519	Wheel Tire & Gear Assy. (Incl. Ref. #32)	2
32	27-6250	Bushing - Wheel	4
33	27-6231	Bolt - Wheel	2
34	40-1940	Washer - Wheel Bolt	4
35	52-3620	Nut - Lock	2
36	65-5220	Screw - Cap Socket Hd.	2
37	60-8870	Yoke - Shift	1
38	29-9570	Bushing - Yoke	1
39	60-8810	Retainer - Shift Fork	1
40	60-8780	Sleeve - Shift Key	1
41	65-5230	Key - Shift	2
42	60-8760	Collar - Shift	1
43	65-5250	Clip - Spring	1
44	36-4780	Washer - Thrust	1

*Not Illustrated

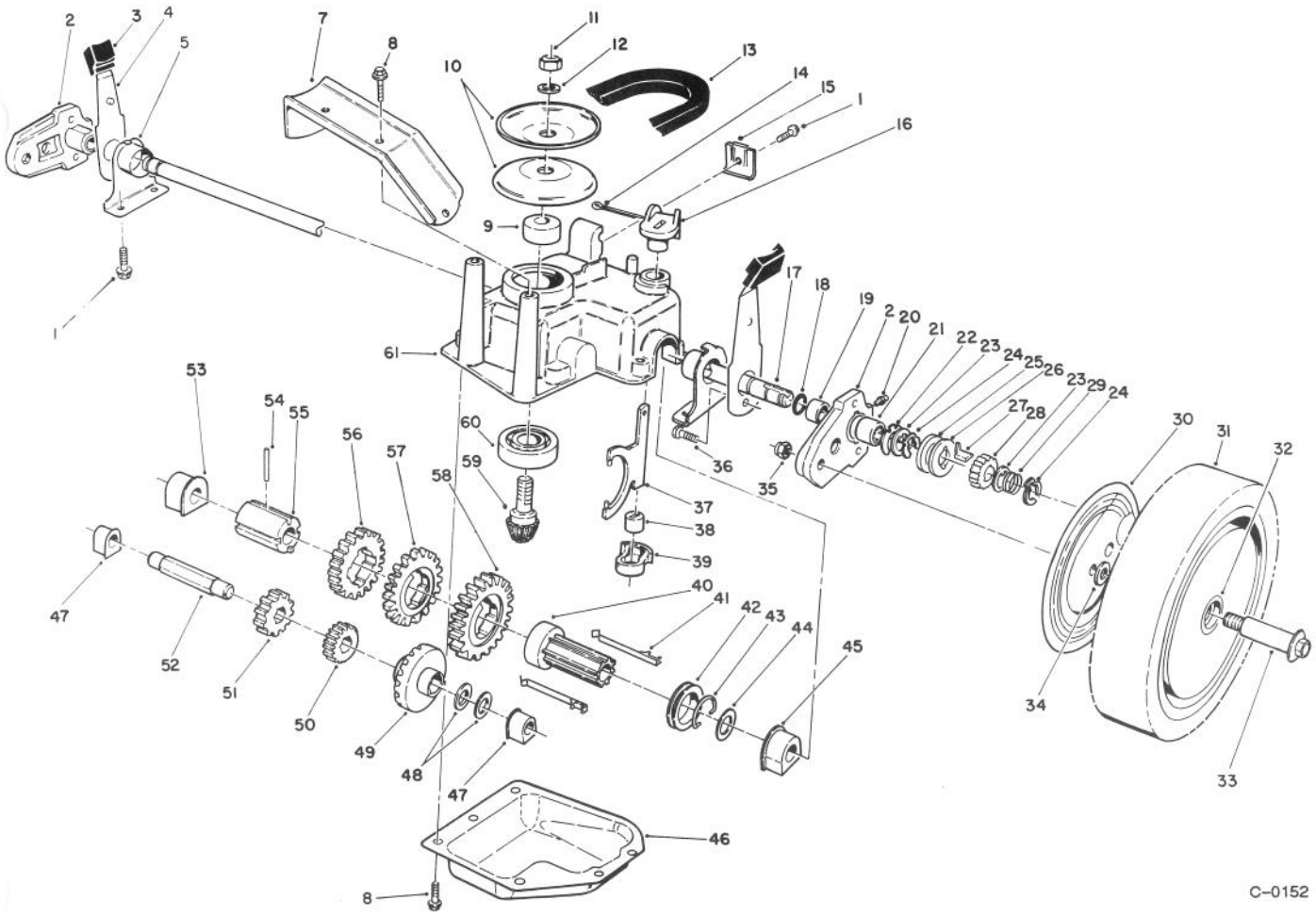

GEAR CASE ASSEMBLY (Continued)

Ref. No.	Part No.	Description	No. Used
45	60-8770	Bushing - Output Shaft	1
46	60-8730	Cover - Gear Case	1
47	60-8750	Bushing - Intrmdt. Shaft	2
48	36-4791	Washer - Thrust	2
49	55-3760	Gear - Pinion 15T	1
50	55-3780	Gear - Pinion 20T	1
51	55-3800	Gear - Pinion 25T	1
52	60-8800	Shaft - Intermediate	1
53	60-8850	Bushing - Output Shaft	1

Ref. No.	Part No.	Description	No. Used
54	32121-120	Pin - Coil	1
55	60-8790	Sleeve - Gear	1
56	55-3810	Gear - 39T (3rd Gear)	1
57	55-3790	Gear - 44T (2nd Gear)	1
58	55-3770	Gear - 49T (1st Gear)	1
59	60-8890	Pinion - Bevel	1
60	38-7820	Bearing - Ball	1
61	60-8710	Case - Gear (Upper)	1
*	62-6672	Gear Case Assy. Complete	1

*Not Illustrated

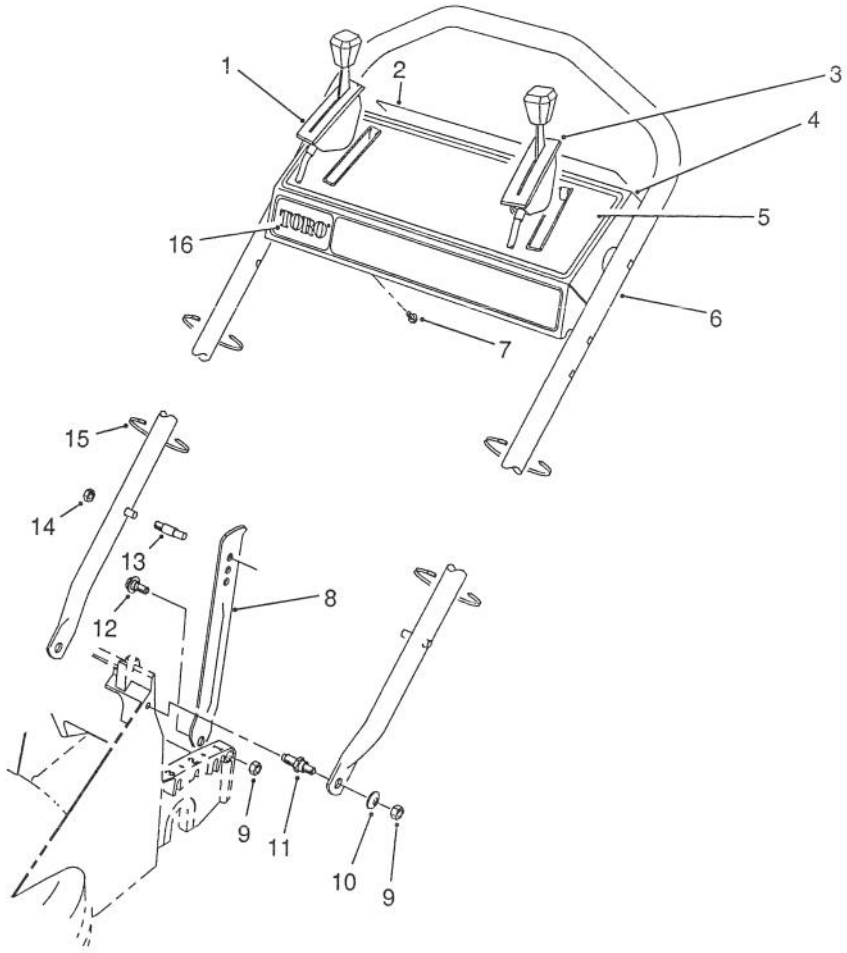

C-0173

HANDLE ASSEMBLY

Ref. No.	Part No.	Description	No. Used
1	65-5530	Control - Ground Speed Bend Type #3 Sheath Lg. 51-1/4" Wire Lg. 2-1/8"	1
2	63-9060	Decal - Danger	1
3	71-0650	Control - Throttle Bend Type #1 Sheath Lg. 44-1/2" Wire Lg. 2-3/16"	1
4	13-6629	Control Panel Assembly (Incl. Ref. #2 & 5)	1
5	66-0420	Decal - Instruction	1
6	66-0320	Handle	1
7	32104-76	Screw - Self Tapping	5
8	65-5730	Latch - Handle	2
9	3296-29	Nut - Lock	4
10	3256-23	Washer - Flat	2
11	66-0450	Screw - Shoulder Stud	2
12	66-0440	Screw - Shoulder	2
†13	49-2750	Pin - Handle	2
†14	3296-47	Nut - Lock	2
15	3290-378	Tie - Cable	4
16	66-1770	Decal - TORO	1

*Not Illustrated
†Service Replacement Parts

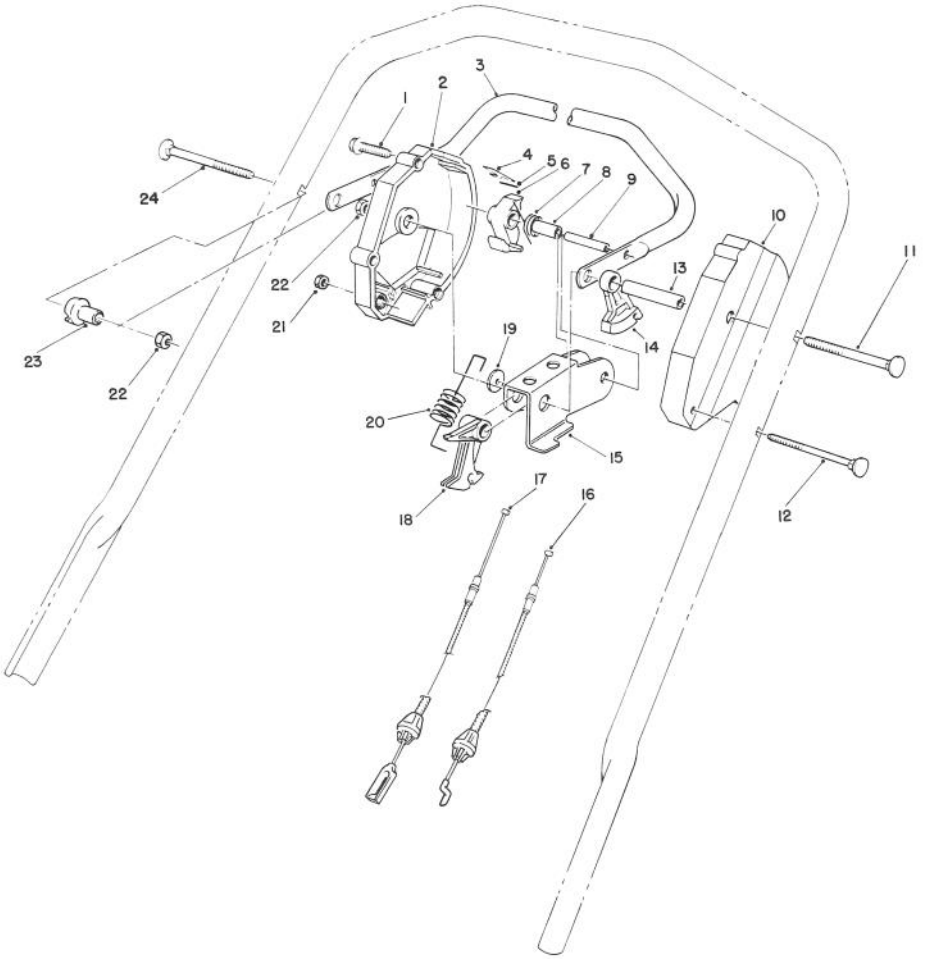

C-0153

TRACTION CONTROL ASSEMBLY

Ref. No.	Part No.	Description	No. Used
1	46-7040	Screw - Hex. Washer Hd.	3
2	66-0160	Housing - Control R.H.	1
3	52-7430	Control Bar Assembly	1
4	52-7410	Spring - Leaf	1
5	57-6290	Pin - Insert	1
6	46-5530	Hook - Control	1
7	46-5510	Spring - Torsion	1
8	46-5550	Bushing - Sleeve	1
9	32121-9	Pin - Coil	1
10	46-5460	Housing - Control (L.H.)	1
11	17-9425	Screw - Handle	1
12	46-6431	Screw - Handle	1

Ref. No.	Part No.	Description	No. Used
13	46-5590	Spacer	1
14	46-5520	Lever - Traction	1
15	66-0180	Rocker	1
16	65-5520	Cable - Traction	1
17	66-0730	Cable - Clutch	1
18	46-5540	Lever - Cable	1
19	66-0170	Washer - Nylon	1
20	66-0190	Spring - Detent	1
21	3296-8	Nut - Lock	1
22	3296-58	Nut - Lock	2
23	66-0330	Support - Spacer	1
24	17-9426	Screw - Handle	1

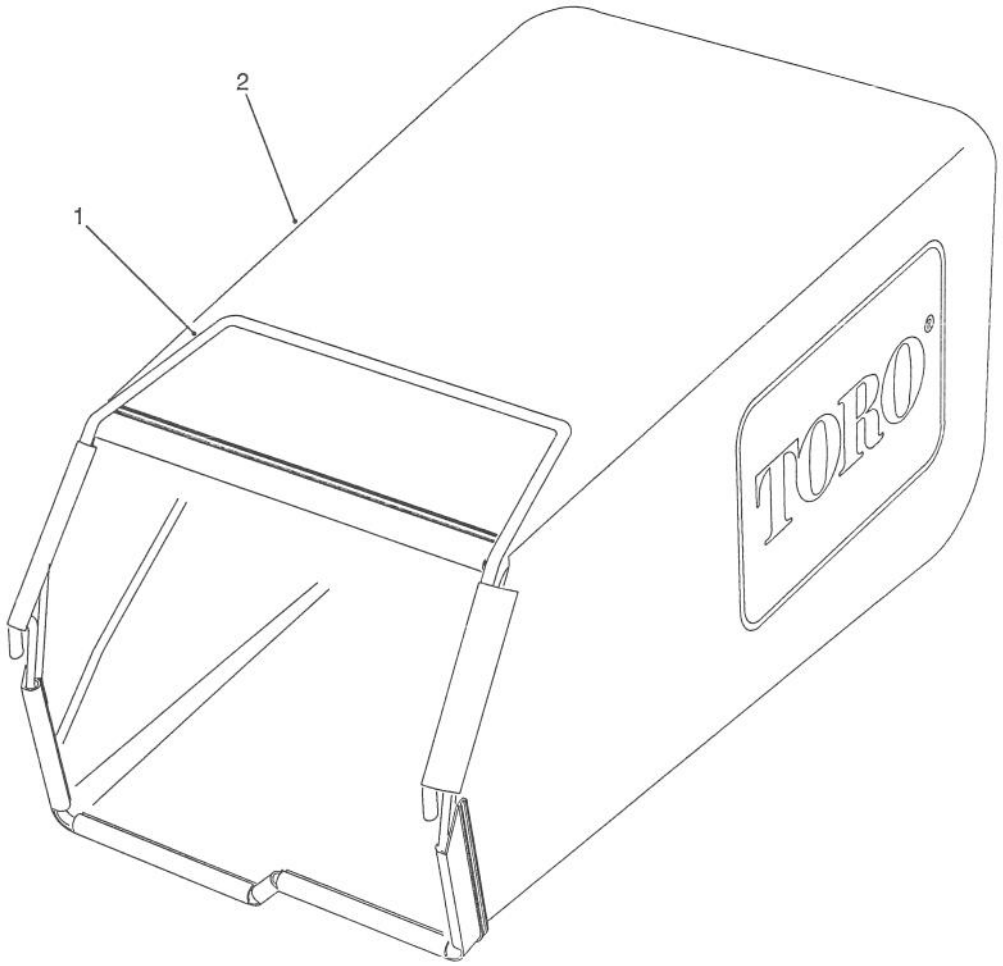

C-0168

GRASS BAG ASSEMBLY

Ref. No.	Part No.	Description	No. Used
1	71-2970	Frame - Grass Bag	1
2	66-0010	Bag	1

Ref. No.	Part No.	Description	No. Used
*	13-6349	Grass Bag Assembly (Incl. Ref. #1 & 2)	1

*Not Illustrated

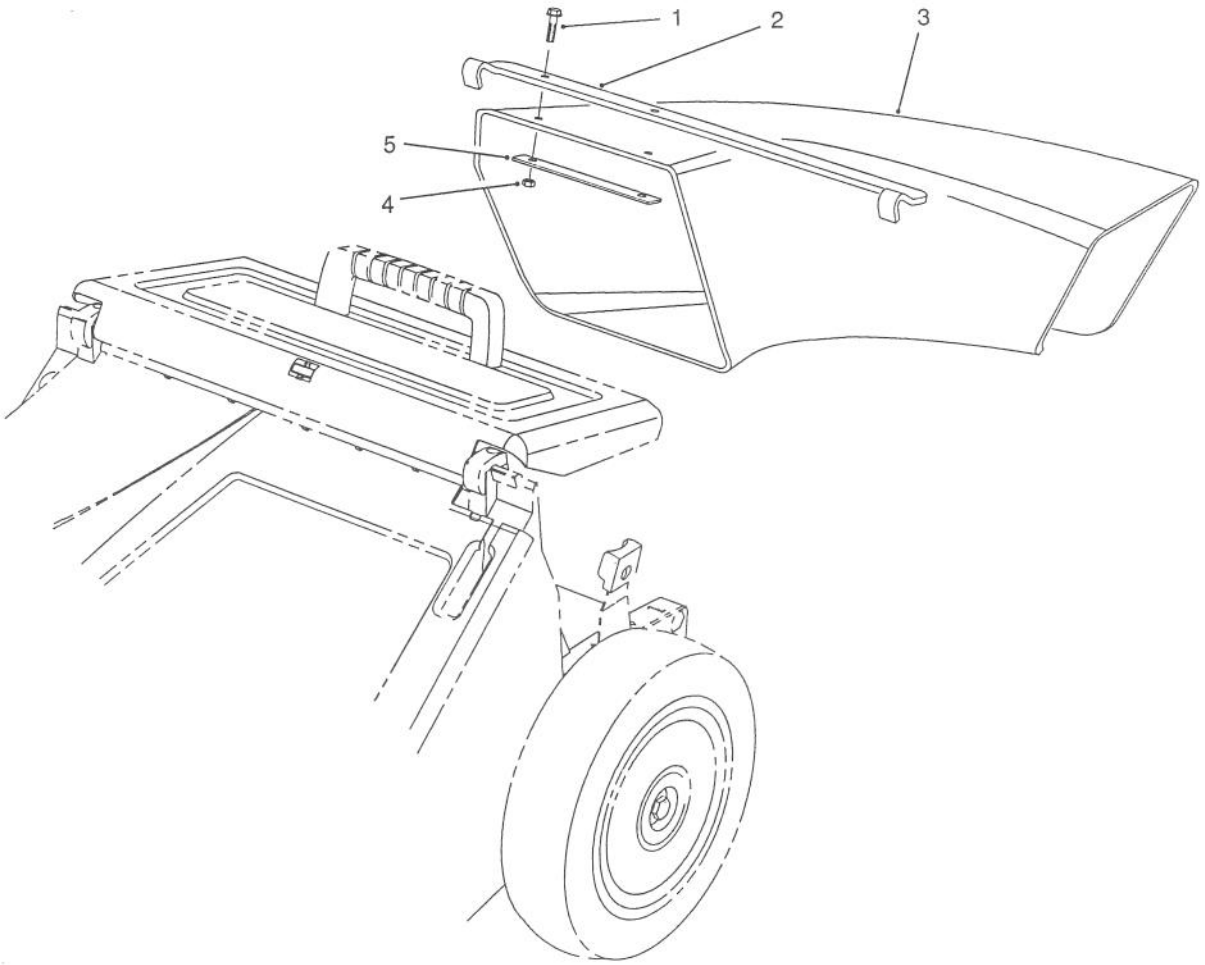

C-0169

SIDE DISCHARGE CHUTE MODEL NO. 59112 (Optional)

Ref. No.	Part No.	Description	No. Used
1	3290-126	Screw - Hex. Washer Hd.	2
2	66-0070	Bracket - Chute Hanger	1
3	65-5240	Chute - Discharge	1

Ref. No.	Part No.	Description	No. Used
4	3296-12	Nut - Lock	2
5	66-0060	Plate - Stress	1

ENGINE TECUMSEH MODEL NO. OVRM40 TYPE NO. 42603

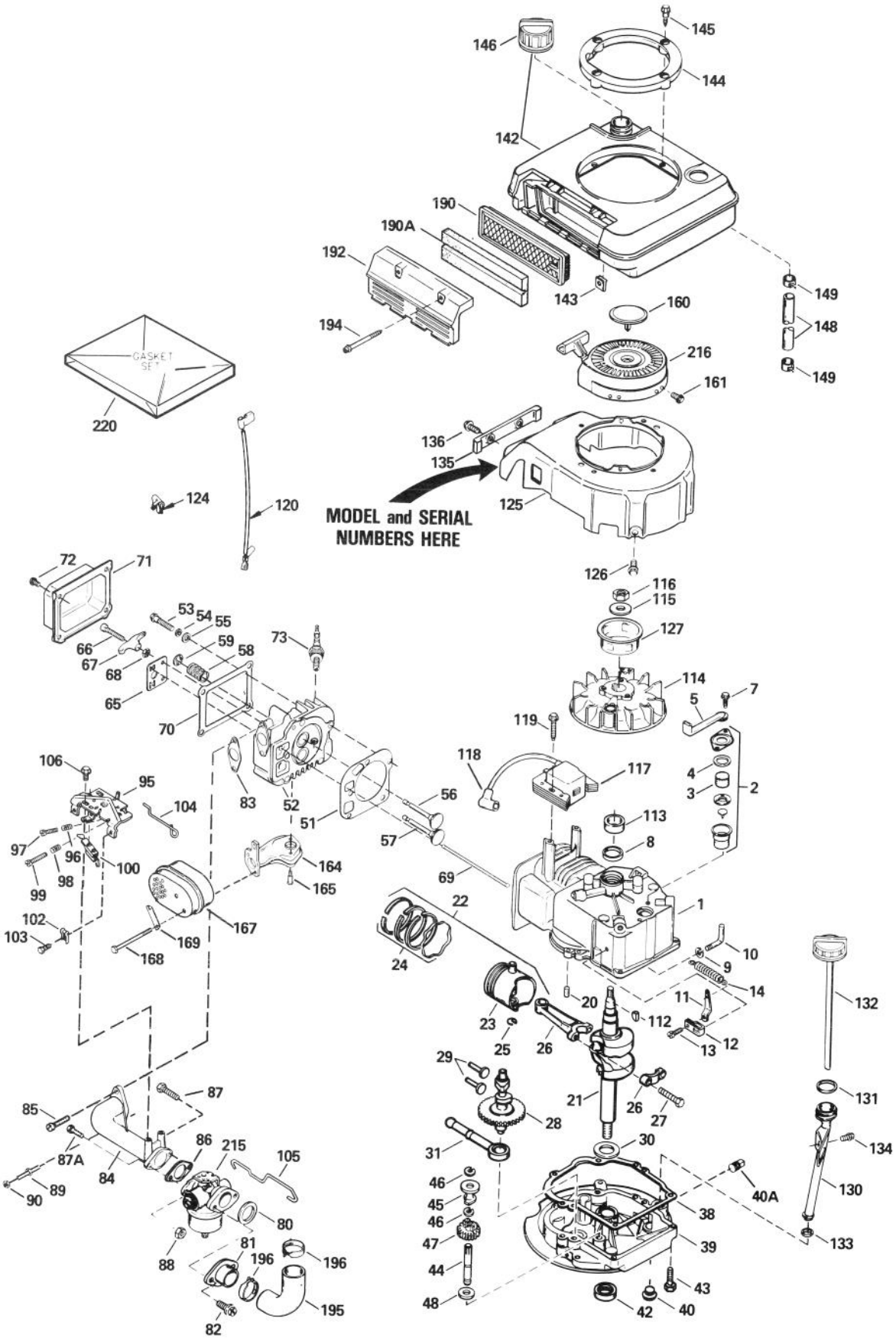

ENGINE TECUMSEH MODEL NO. OVRM40-42603

Ref. No.	Part No.	Description	No. Used
1	35613	Cylinder Assembly (Incl. Ref. #8 & 20)	1
2	34214A	Breather Assembly (Incl. Ref. #3, 4 & 7)	1
3	33734	Element - Breather	1
4	†33735	Gasket - Breather	1
5	35496	Tube - Breather	1
7	30200	Screw - Hex. Washer Hd.	2
8	32600	Seal - Oil	1
9	28277	Washer - Flat	1
10	30589	Rod - Governor (Incl. Ref. #9)	1
11	31383A	Lever - Governor	1
12	31335	Clamp - Governor Lever	1
13	650548	Screw - Hex. Washer Hd.	1
14	33578	Spring - Extension	1
20	26727	Pin - Dowel	2
21	35748	Crankshaft	1
22	34514	Piston Pin & Ring Std. (Incl. Ref. #23-25)	1
*	34515	Piston Pin & Ring .010 O.S. (Incl. Ref. #23-25)	1
*	34516	Piston Pin & Ring .020 O.S. (Incl. Ref. #23-25)	1
23	32538B	Piston & Pin Std. (Incl. Ref. #25)	1
*	32548B	Piston & Pin .010 O.S. (Incl. Ref. #25)	1
*	32549B	Piston & Pin .020 O.S. (Incl. Ref. #25)	1
24	28986	Piston Ring Set Std.	1
*	28987	Piston Ring Set .010 O.S.	1
*	28988	Piston Ring Set .020 O.S.	1
25	20381	Ring - Retaining	2
26	30963B	Connecting Rod Assy. (Incl. Ref. #27)	1
27	32610A	Bolt - Connecting Rod	2
28	35615	Camshaft	1
29	35616	Valve - Lifter	2
30	32323	Washer - Thrust	1
31	29914	Oil Pump Assembly	1
38	†35261	Gasket - Mounting Flange	1
39	34311B	Flange - Mounting (Incl. Ref. #40, 40A, 42 & 44)	1
40	27244	Plug - Oil Drain	1
40A	9556	Plug - Oil Drain	1
42	27897	Seal - Oil	1
43	650488	Screw - Hex. Hd.	6
44	30574	Shaft - Governor	1
45	30588A	Spool - Governor	1
46	29193	Ring - Retaining	2
47	30591	Governor Gear Assembly (Incl. Ref. #48)	1
48	35479	Washer - Flat	1
51	†35617	Gasket - Cylinder Head	1
52	35630	Head - Cylinder	1
53	650912	Screw - Hex. Hd.	5
54	650691	Washer - Flat	5
55	650690	Washer - Belleville	5

Ref. No.	Part No.	Description	No. Used
56	35619	Valve - Intake Std. (Incl. Ref. #59)	1
*	35620	Valve - Intake .031 O.S. (Incl. Ref. #59)	1
57	35621	Valve - Exhaust Std. (Incl. Ref. #59)	1
*	35622	Valve - Exhaust .031 O.S. (Incl. Ref. #59)	1
58	31672	Spring - Valve	2
59	31673	Cap - Valve Spring Keeper	2
65	35623	Guide - Push Rod	1
66	650913	Stud - Rocker Arm	2
67	35624	Arm - Rocker	2
68	650914	Nut - Hex. Jam	2
69	35625	Rod - Push	2
70	†35626	Gasket - Rocker Cover	1
71	35718	Cover - Rocker Arm	1
72	30063	Screw - Hex. Washer Hd.	4
73	34645	Spark Plug - Resistor (Champion RN-4C or equivalent)	1
80	†27272A	Gasket - Air Cleaner	1
81	32971	Adapter - Air Cleaner	1
82	650709	Screw - Round Hd.	2
83	†35629	Gasket - Intake Pipe	1
84	35628	Pipe - Intake	1
85	65-451	Screw - Hex. Hd.	1
86	†26756	Gasket - Carburetor	1
87	6201	Screw - Hex. Hd.	1
87A	650920	Screw - Special Hex. Hd.	1
88	29752	Nut - Lock	2
89	650917	Stud - Manifold	1
90	29752	Nut - Lock	1
95	33131A	Control Bracket Assembly (Incl. Ref. #96-100)	1
96	33802	Spring - Compression	1
97	650777	Screw - Filester Hd.	1
98	31342	Spring - Compression	1
99	650549	Screw - Filester Hd.	1
100	610973	Terminal Assembly	1
102	27793	Clip - Conduit	1
103	28942	Screw - Hex. Washer Hd.	1
104	34337	Link - Governor Spring	1
105	34336	Link - Throttle	1
106	30200	Screw - Hex. Washer Hd.	2
112	611004	Key - Flywheel	1
113	34080	Spacer - Flywheel Key	1
114	611112	Flywheel	1
115	650815	Washer - Belleville	1
116	650816	Nut - Flywheel	1
117	34443A	Solid State Assembly	1
118	610118	Cover - Spark Plug	1
119	650814	Screw - Torx Washer Hd.	2
120	34231	Wire - Ground	1
124	29443	Clip - Spring	1
125	35719	Housing - Blower	1
126	650831	Screw - Hex. Washer Hd.	3
127	35000	Hub - Starter	1
130	35498	Tube - Oil Fill	1
131	35499	Seal - O-Ring	1

*Not Illustrated
†Included In Gasket Set Ref. No. 220

ENGINE TECUMSEH MODEL NO. OVRM40–42603 (Cont.)

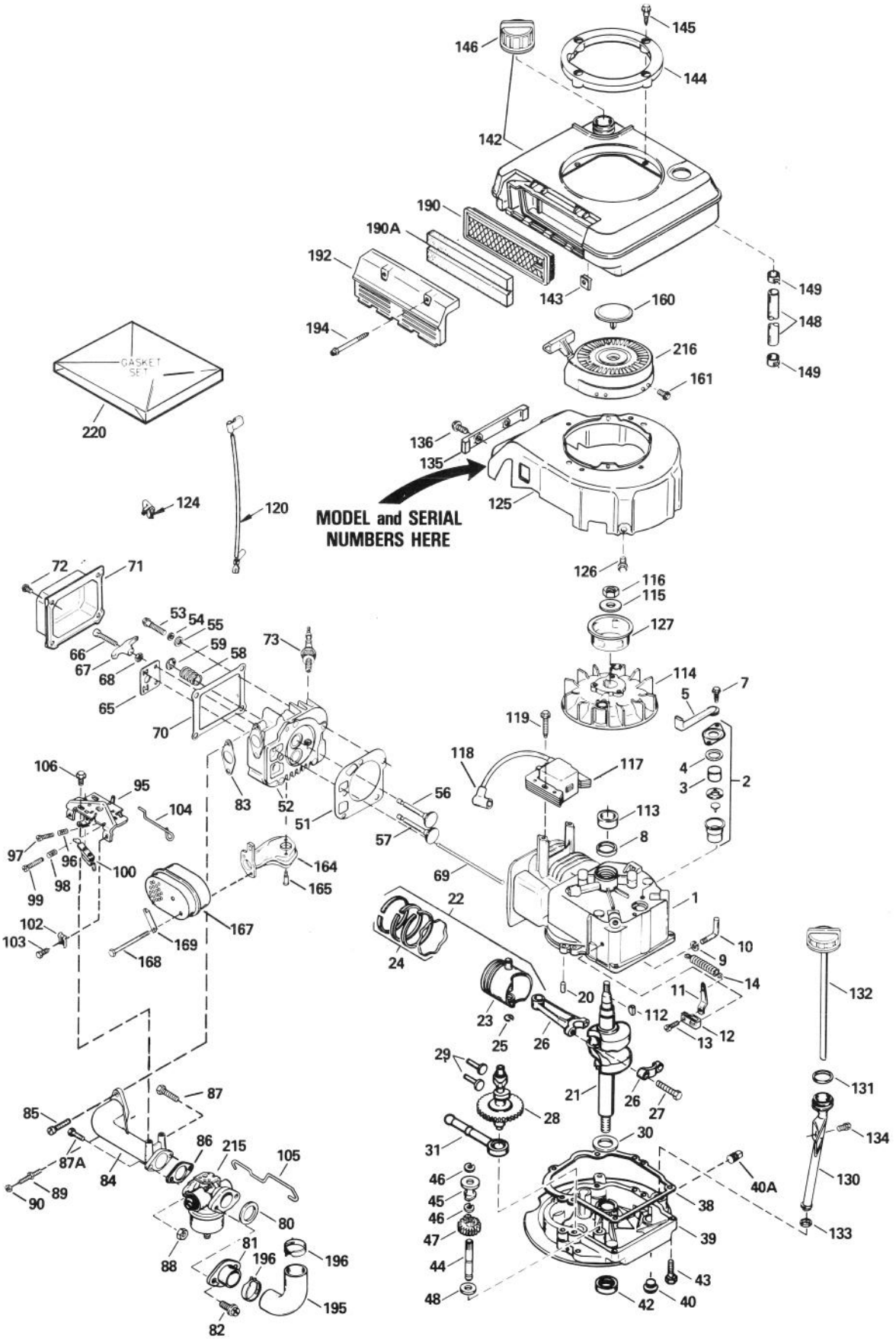

ENGINE TECUMSEH MODEL NO. OVRM40–042603 (Cont.)

Ref. No.	Part No.	Description	No. Used
132	35507	Dipstick – Oil Fill	1
133	†34265	Gasket – Fill Tube	1
134	650562	Screw – Hex. Washer Hd.	1
135	35721	Cover – Blower Housing	1
136	650821	Screw – Hex. Washer Hd.	2
142	35501A	Shroud & Tank Assembly (Incl. Ref. #143 & 146)	1
143	650900	Clip – U-Nut	2
144	35502	Ring – Shroud	1
145	650898	Screw – Shoulder	4
146	35355	Cap – Fuel	1
148	30705	Line – Fuel	1
149	26406	Clamp – Fuel Line	2
160	35392	Plug – Starter	1
161	650884	Screw – Hex. Washer Hd.	2

Ref. No.	Part No.	Description	No. Used
164	35720	Exhaust Manifold Assembly	1
165	650918	Screw – Torx Hd. Shoulder	2
167	391028	Muffler Assembly	1
168	650697A	Screw – Hex. Washer Hd.	2
169	31588	Plate – Lock	1
190	35500	Filter – Air Cleaner	1
190A	35705	Filter – Pre-Cleaner	1
192	35503	Cover – Air Cleaner	1
194	650899	Screw – Filester Hd.	2
195	35504	Tube – Air Cleaner	1
196	35505	Clamp – Air Cleaner	2
215	632521	Carburetor Assembly (Incl. Ref. #86)	1
216	590635	Starter – Rewind	1
220	35633A	Gasket Set	1

*Not Illustrated
†Included In Gasket Set Ref. No. 220

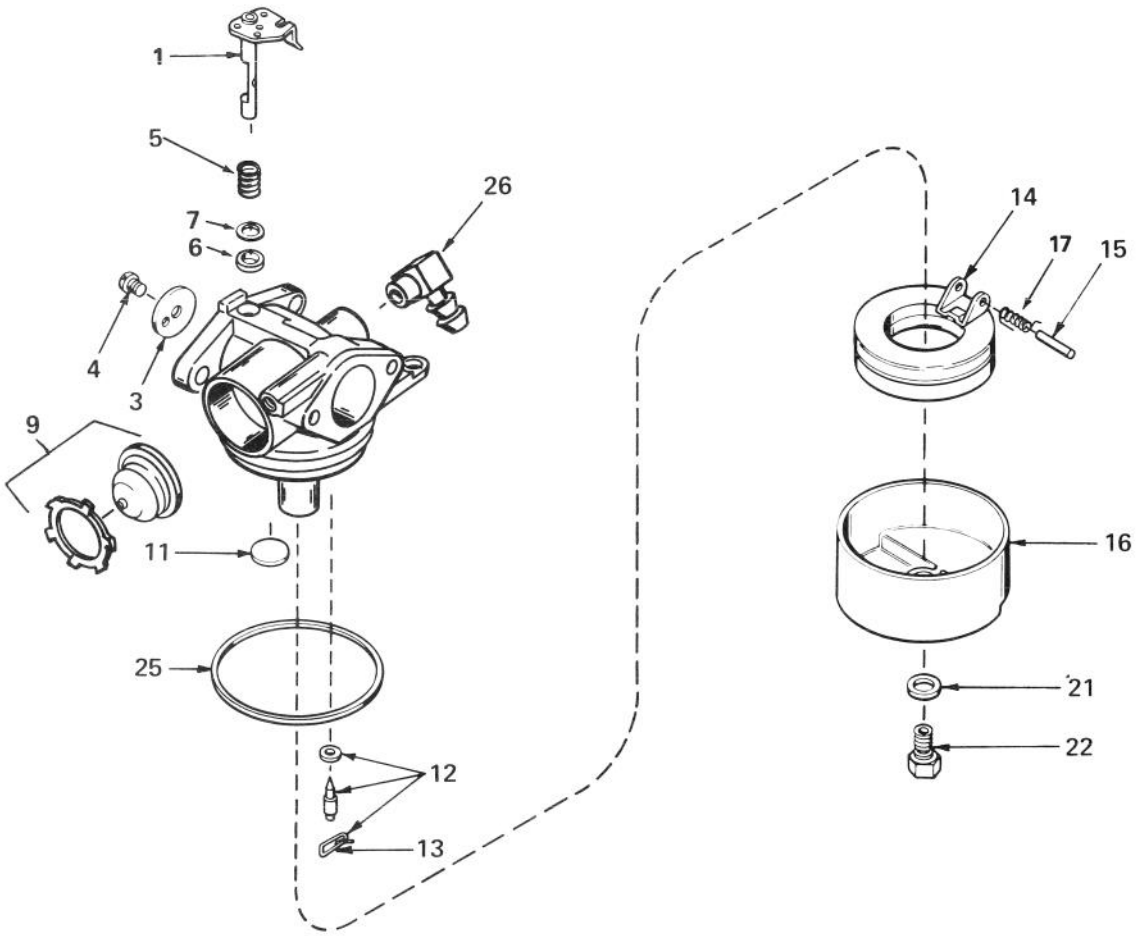

CARBURETOR TECUMSEH NO. 632521

Ref. No.	Part No.	Description	No. Used
1	631615	Throttle Shaft & Lever Assy.	1
3	632504	Shutter - Throttle	1
4	650506	Screw - Throttle Shutter	1
5	631767	Spring - Throttle	1
6	631971	Washer - Dust Seal	1
7	631184	Washer - Dust Seal	1
9	632433	Bulb & Retainer - Primer	1
11	631027	Plug - Welch	1
12	631021	Needle Seat & Clip Assy. (Incl. Ref. #13)	1

Ref. No.	Part No.	Description	No. Used
13	631022	Clip - Needle	1
14	632019	Float - Carburetor	1
15	631024	Shaft - Float	1
16	631867	Bowl - Float	1
17	632386	Spring - Float Shaft	1
21	27110	Washer - Fiber	1
22	632505	Nut - Float Bowl	1
25	631028	Gasket - Float Bowl	1
26	631807	Fitting - Fuel Inlet	1

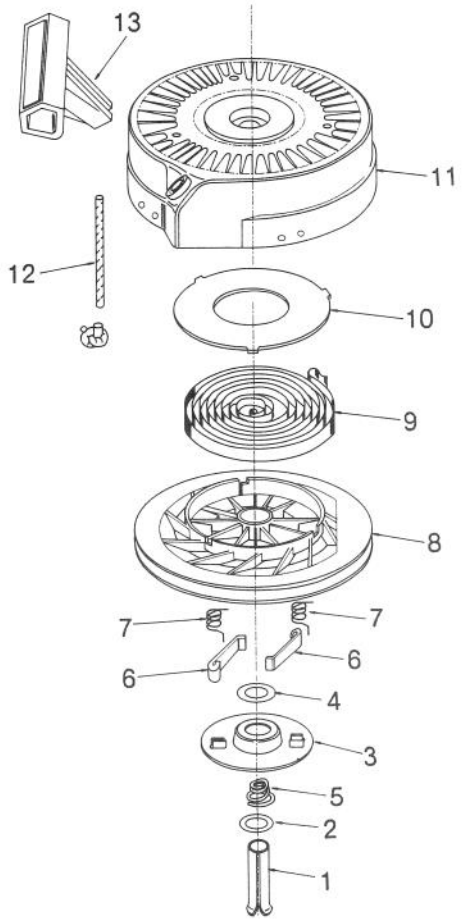

REWIND STARTER TECUMSEH NO. 590635

Ref. No.	Part No.	Description	No. Used
1	590599	Pin – Spring	1
2	590600	Washer	1
3	590615	Retainer	1
4	590601	Washer	1
5	590598	Spring – Brake	1
6	590616	Dog – Starter	2
7	590617	Spring – Dog	2

Ref. No.	Part No.	Description	No. Used
8	590618	Pulley	1
9	590619	Spring – Rewind	1
10	590620	Cover – Spring	1
11	590622	Housing – Starter	1
12	590535	Rope – Starter 62"	1
13	590452	Handle – Starter	1

PRODUCT CHANGES

In an effort to make improvements available to TORO owners as quickly as possible, minor changes are incorporated into Toro's products from time to time that do not become immediately shown in the Parts Catalog. If such a change has been made in your unit, which is not reflected in your manual, see your TORO Distributor or his Authorized TORO Service Dealer for information and part numbers.

IDENTIFICATION AND ORDERING

MODEL AND SERIAL NUMBERS

The Lawnmower has two identification numbers; a model number and a serial number. The two numbers are stamped on a decal which is located on the rear of the housing. In any correspondence concerning the lawnmower, supply model and serial numbers to assure that correct information and replacement parts are obtained.

To order replacement parts from an Authorized TORO Service Dealer, supply the following information:
1. Model and serial number of the lawnmower.
2. Part number, description, and the quantity of part(s) desired.

NOTE: Do not order by reference number if a parts catalog is being used; use the PART NUMBER.

COUNTRIES OTHER THAN THE UNITED STATES OR CANADA

Customers who have purchased TORO products exported from the United States or Canada should contact their Toro Distributor (Dealer) to obtain guarantee policies for your country, province or state. If for any reason you are dissatisfied with your Distributor's service or have difficulty obtaining guarantee information, contact the TORO importer. If all other remedies fail, you may contact us at The Toro Company.

MAINTENANCE RECORD

Date								

MAINTENANCE RECORD

Date								

MAINTENANCE RECORD

Date								

Compliance with Radio Interference Regulations Certified.
Certifie Conforme au Reglement sur le Brouillage Radioelectrique.

Litho in U.S.A.