FORM NO. 3313-798

TORO

MODEL NO. 16551-9000001 & UP

PARTS CATALOG

21" H.P. SIDE DISCHARGE 2 CYCLE ZONE START

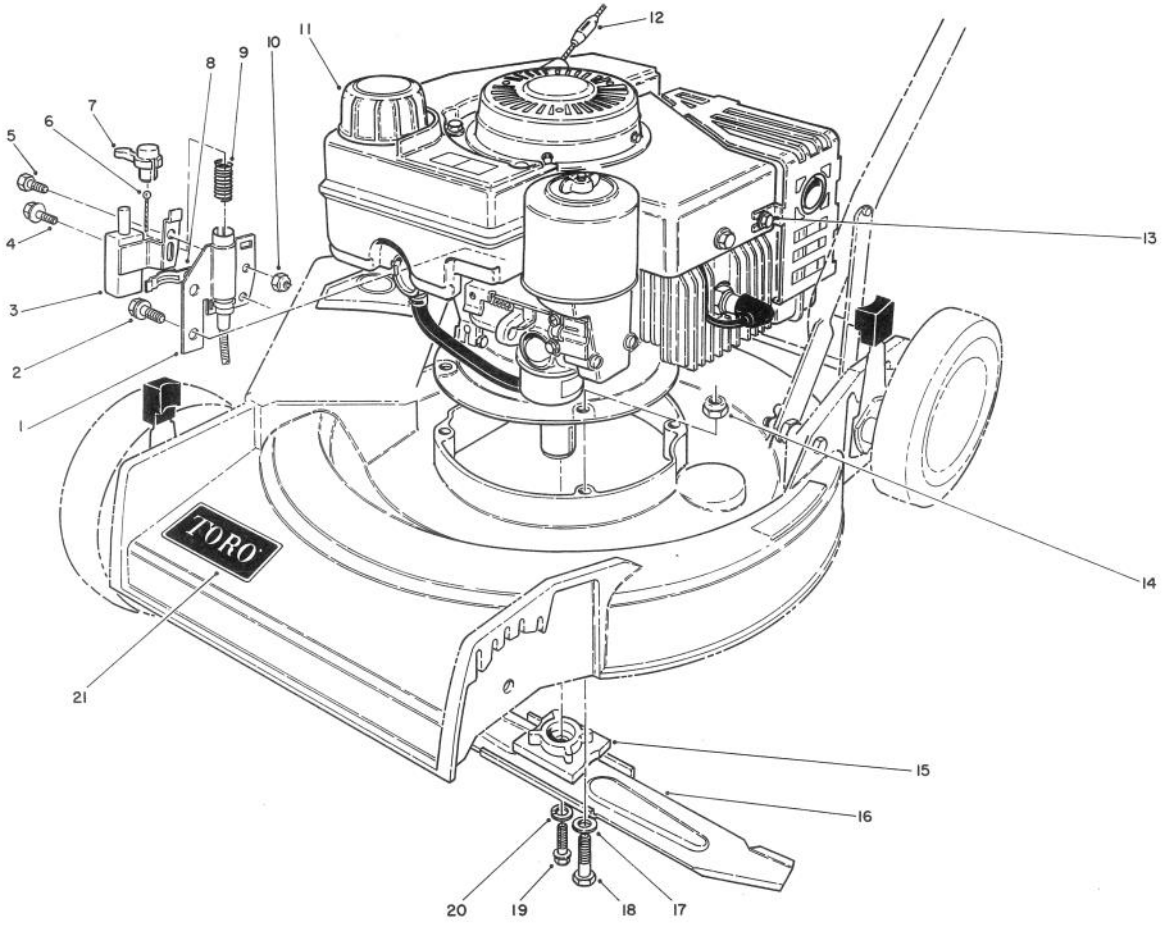

ENGINE ASSEMBLY

C-0234-89

Ref. No.	Part No.	Description	No. Used
1	70-7740	Tube Assembly	1
2	12-3270	Capscrew — Thd. Forming	2
3	47-6520	Switch — Push Button	1
4	12-5450	Capscrew	1
5	321-2	Capscrew	1
6		Cable Brake (Ref.)	1
7	47-7350	Plunger Assembly	1
8	46-6530	Clamp — Cable	1
9	46-9130	Spring — Compression	1
10	3296-42	Nut — Lock	1
11		Engine (2 cycle)	1

Ref. No.	Part No.	Description	No. Used
12		Recoil Stop (Ref.)	1
13	2210-250	Capscrew	3
14	3296-39	Nut — Lock	3
15	49-7900	Retainer — Blade	1
16	20-2720	Blade	1
17	3256-24	Washer — Flat	3
18	323-12	Screw — Engine	3
19	26-0671	Screw — Blade	1
20	3253-22	Lockwasher	1
21	70-2200	Decal — Toro	1

©The TORO Company — 1989

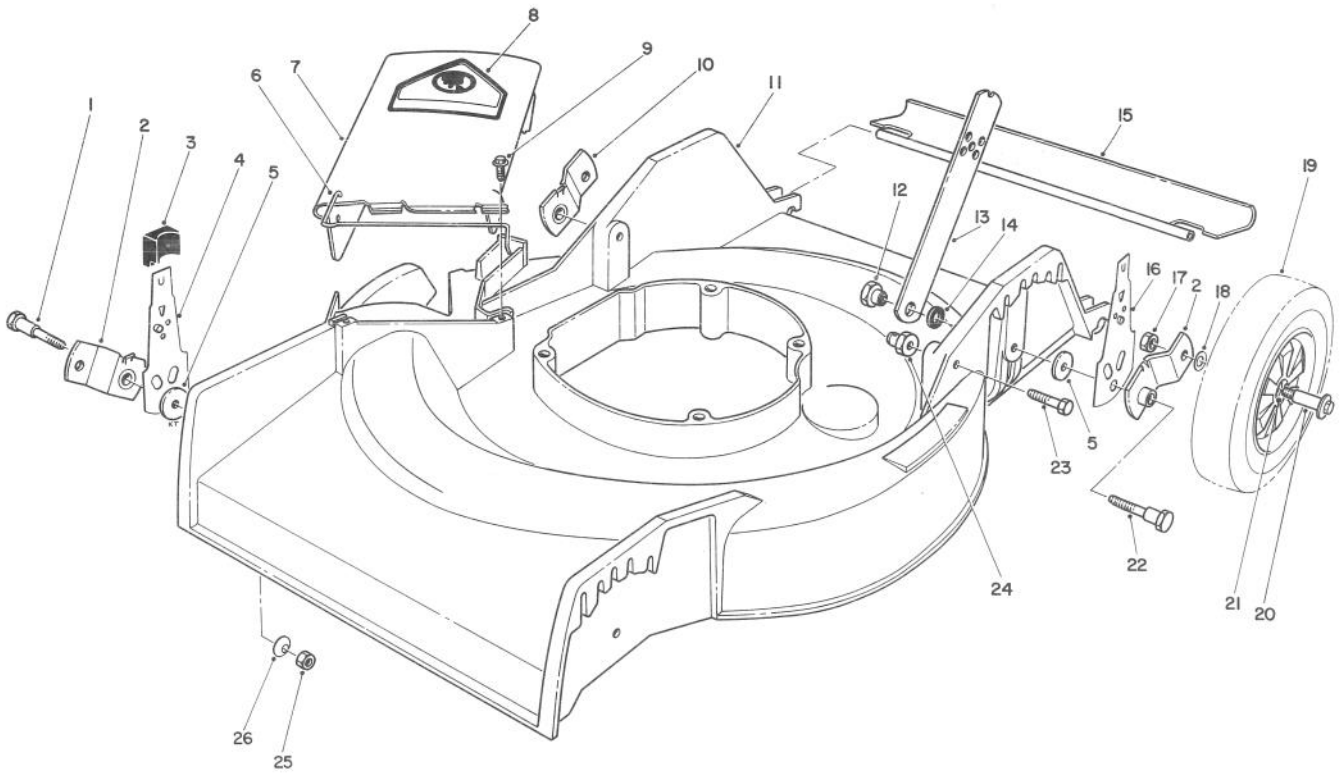

HOUSING ASSEMBLY

C-0235-89

Ref. No.	Part No.	Description	No. Used
1	3-0655	Screw — Pivot	2
2	20-2140	Pivot Arm "A"	2
3	25-7740	Knob — Spring Arm	4
4	66-6070	Spring Arm Front — R.H.	1
*	66-6010	Spring Arm — Front L.H.	1
5	33-0390	Washer — Pivot	4
6	20-2640	Hinge — Spring	1
7	13-4049	Deflector Assembly (Incl. Ref. #6 & 8)	1
8	39-5770	Decal — Danger	1
9	46-6811	Screw & Washer Assembly	2
10	20-2130	Pivot Arm "B"	2
11	13-2439	Housing	1
12	27-6520	Nut — Shoulder	2
13	27-7080	Latch — Handle	2

Ref. No.	Part No.	Description	No. Used
14	3-3287	Spacer — Handle Latch	2
15	66-5990	Shield — Rear	1
16	66-6030	Spring Arm — Rear	2
17	52-3620	Locknut	4
18	40-1940	Washer — Wheel Bolt	4
19	27-6200	Wheel & Tire Assembly (Incl. Ref. #21)	4
20	27-6230	Bolt — Wheel	4
21	27-6250	Bushing — Wheel	8
22	28-8880	Screw — Pivot	2
23	322-6	Hex Hd. Capscrew	2
24	12-2080	Nut — Shoulder	2
25	3296-29	Locknut	2
26	3290-456	Washer — Belleville	2

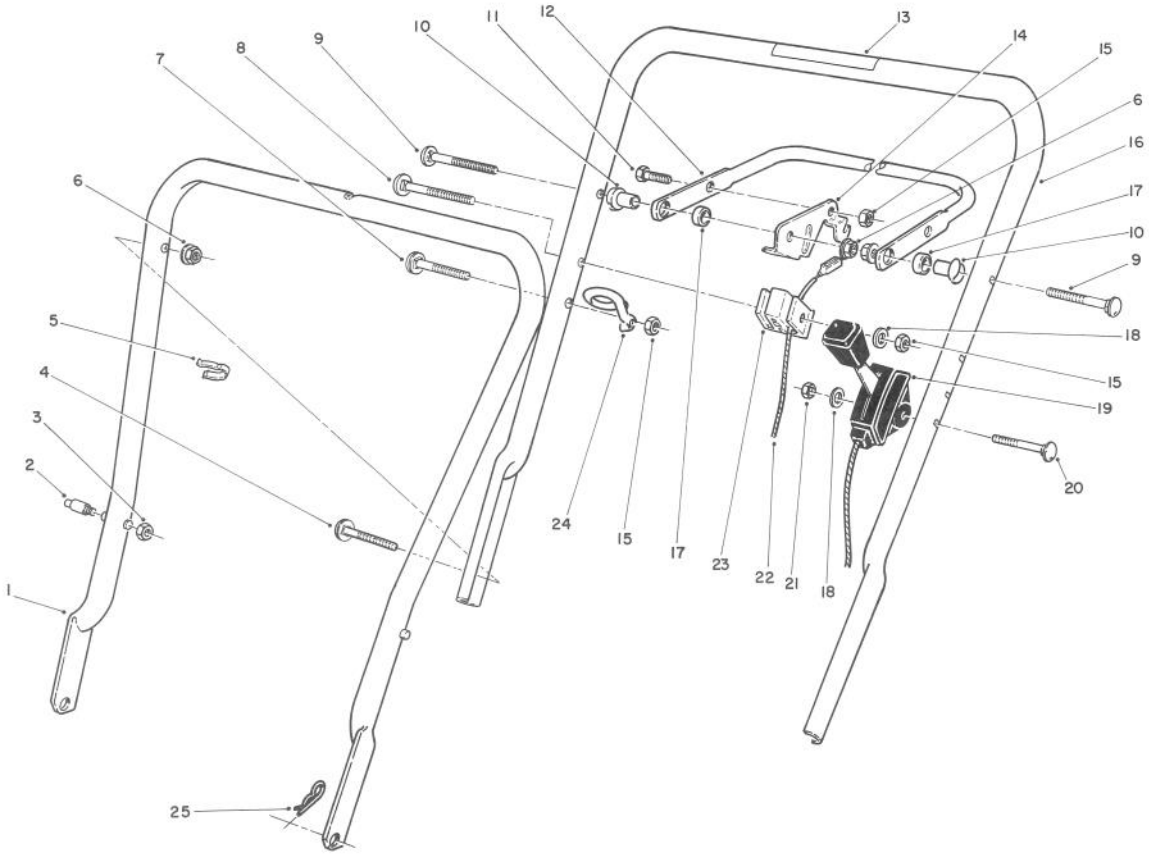

HANDLE ASSEMBLY

C-0236-89

Ref. No.	Part No.	Description	No. Used
1	49-1690	Lower Handle Assembly	1
†2	49-2750	Pin — Handle	2
†3	3296-47	Nut — Lock	2
4	17-9424	Screw — Handle	2
5	218-466	Clip — Cable	2
6	3296-58	Nut — Flange Lock	4
7	46-6433	Screw — Handle	1
8	46-6434	Screw — Handle	1
9	17-9421	Screw — Handle	2
10	49-1630	Support — Spacer	2
11	321-3	Capscrew	1
12	71-3080	Bar — Control	1
13	52-7510	Decal — Warning	1
14	61-8340	Lever — Control	1

Ref. No.	Part No.	Description	No. Used
15	3296-42	Nut — Lock	3
16	12-4419	Handle — Upper (Incl. Ref. #13)	1
17	256-276	Spacer — Nylon	2
18	3256-22	Washer — Flat	2
19	71-2770	Control Throttle (Bend Type #1) (Sheath Lg. 45″) (Wire Lg. 2-3/16″)	1
20	46-6430	Screw — Handle	1
21	3296-56	Nut — Lock	1
22	43-4533	Cable — Brake	1
23	46-6980	Support — Cable	1
24	46-8080	Guide — Rope	1
25	3290-255	Pin — Cotter Hair	2

† Service Replacement Part

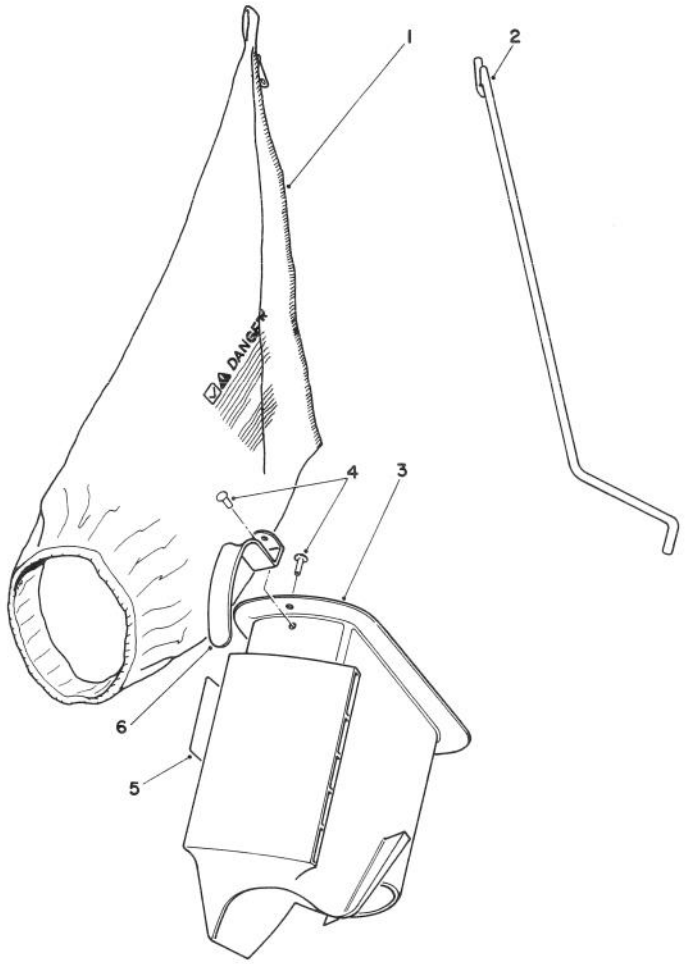

BAGGING KIT NO. 47-6510 (Optional)

C-0187-89

Ref. No.	Part No.	Description	No. Used
1	6-0929	Grass Bag	1
2	47-5830	Bag Rod	1
3	6-1089	Grass Chute (Incl. Ref. #4 & 6)	1

Ref. No.	Part No.	Description	No. Used
4	3295-26	Rivet	2
5	36-5230	Decal — Bag Chute	1
6	20-4650	Handle Chute	1

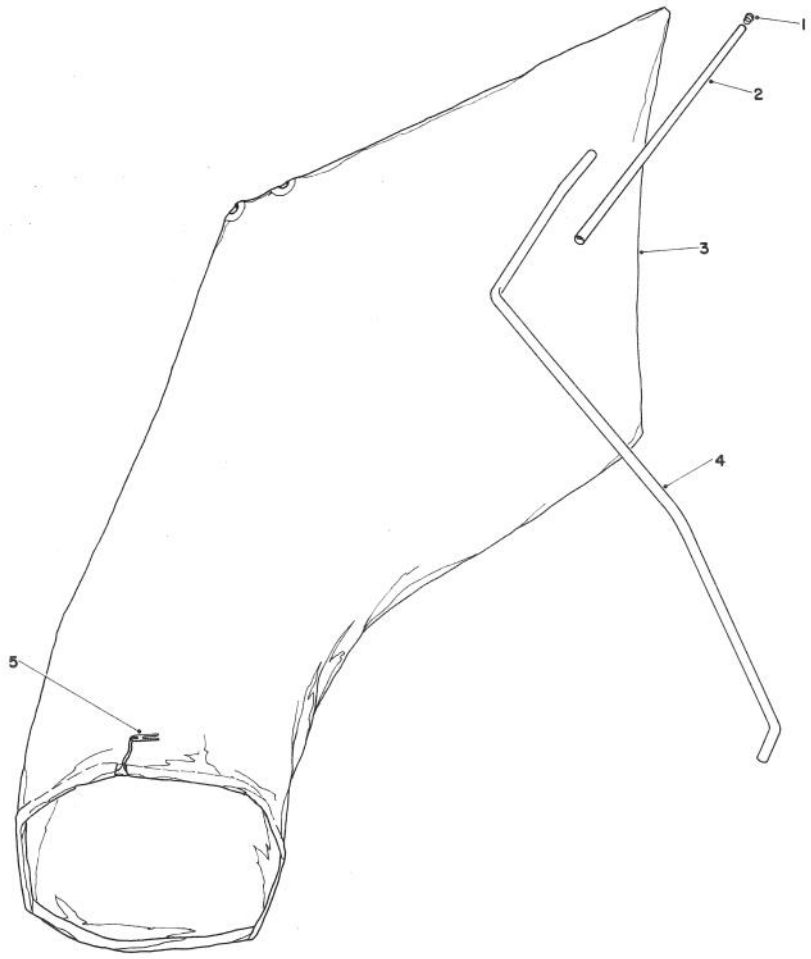

GIANT BAGGING KIT NO. 29-9750 (Optional)

C-0186-89

Ref. No.	Part No.	Description	No. Used
1	2410-29	Cap	1
2	29-7000	Tube 25"	1
3	8-4719	Bag (Incl. Ref. #5)	1

Ref. No.	Part No.	Description	No. Used
4	22-4820	Hanger Rod	1
5	3-2781	Bag Cord Fasteners	1

ENGINE TECUMSEH MODEL NO. TVS840-8016B

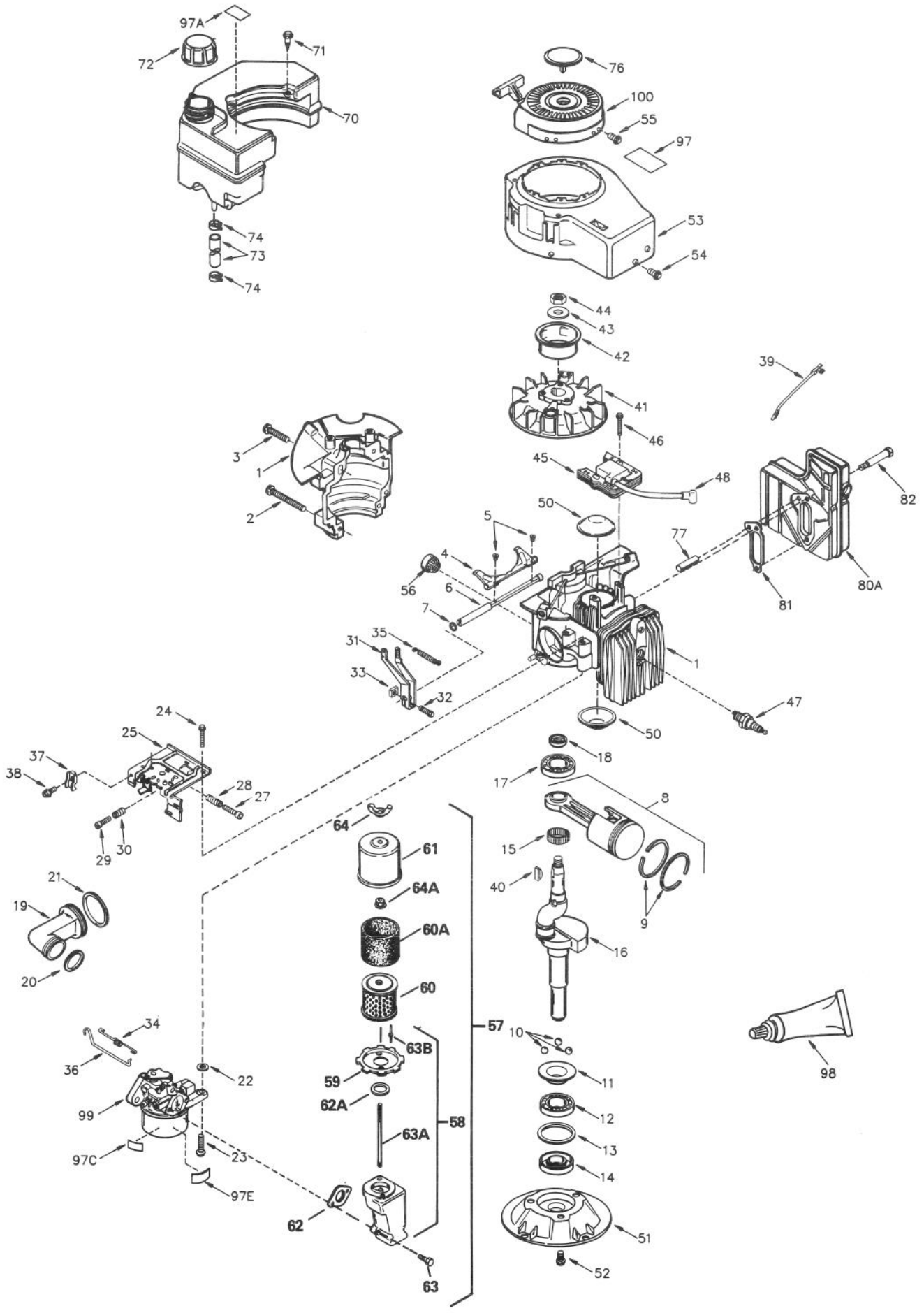

ENGINE TECUMSEH MODEL NO. TVS840-8016B

Ref. No.	Part No.	Description	No. Used
1	250294	Cylinder Assy. (Incl. Ref. # 2, 3, 50 & 56A)	1
2	650891	Screw, Hex hd.	2
3	650892	Screw, Hex hd.	2
4	490304	Lever, Governor	1
5	650506	Screw, Pan washer hd. mach.	2
6	490305	Shaft, Governor	1
7	510337	Seal, Oil	1
8	310279A	Piston & Rod Assy. (Incl. Ref. #9 & 15)	1
9	310239	Ring Set, Piston	1
10	570673	Ball	3
11	510338	Ring, Slide	1
12	530158	Bearing, Ball	1
13	530159	Retainer, Bearing	1
14	510339	Seal, Oil (PTO end)	1
15	530164	Bearing Strip (31 needles)	1
16	290601	Crankshaft	1
17	530161	Bearing, Ball	1
18	510340	Seal, Oil (flywheel end)	1
19	570674	Intake Pipe Assy. (Incl. Ref. #20 & 21	1
20	510341	"O" Ring	1
21	510342	"O" Ring	1
22	27110	Gasket	2
23	792067	Screw, Hex washer hd. taptite	2
24	650735	Screw, Hex hd. Sems taptite	3

Ref. No.	Part No.	Description	No. Used
25	570675	Control Bracket Assy. (Incl. Ref. #27 thru 30)	1
27	650606	Screw, Phil. hd. mach.	1
28	32924	Spring	1
29	650549	Screw, Fil. hd.	1
30	31342	Spring	1
31	490306	Lever, Governor	1
32	29826	Screw, Hex slotted hd. cap.	1
33	29216	Nut, Hex.	1
34	490307	Spring, Throttle Link	1
35	490308	Spring, Governor	1
36	490309	Link, Governor	1
37	27793	Clip, Conduit	1
38	650837	Screw, Hex hd. E.T.	1
39	611148	Wire, Ground	1
40	611107	Key, Flywheel	1
41	611149	Flywheel (w/screw & washers for counterbalance)	1
42	34449	Cup, Starter	1
43	650815	Washer, Belleville	1
44	650816	Nut, Flywheel	1
45	34443A	Solid State Assy.	1
46	650814	Screw, Hex hd.	2
47	611049	Plug, Spark (Champion RCJ-8Y or equivalent)	1
48	610118	Cover, Spark plug	1

ENGINE TECUMSEH MODEL NO. TVS840-8016B (Continued)

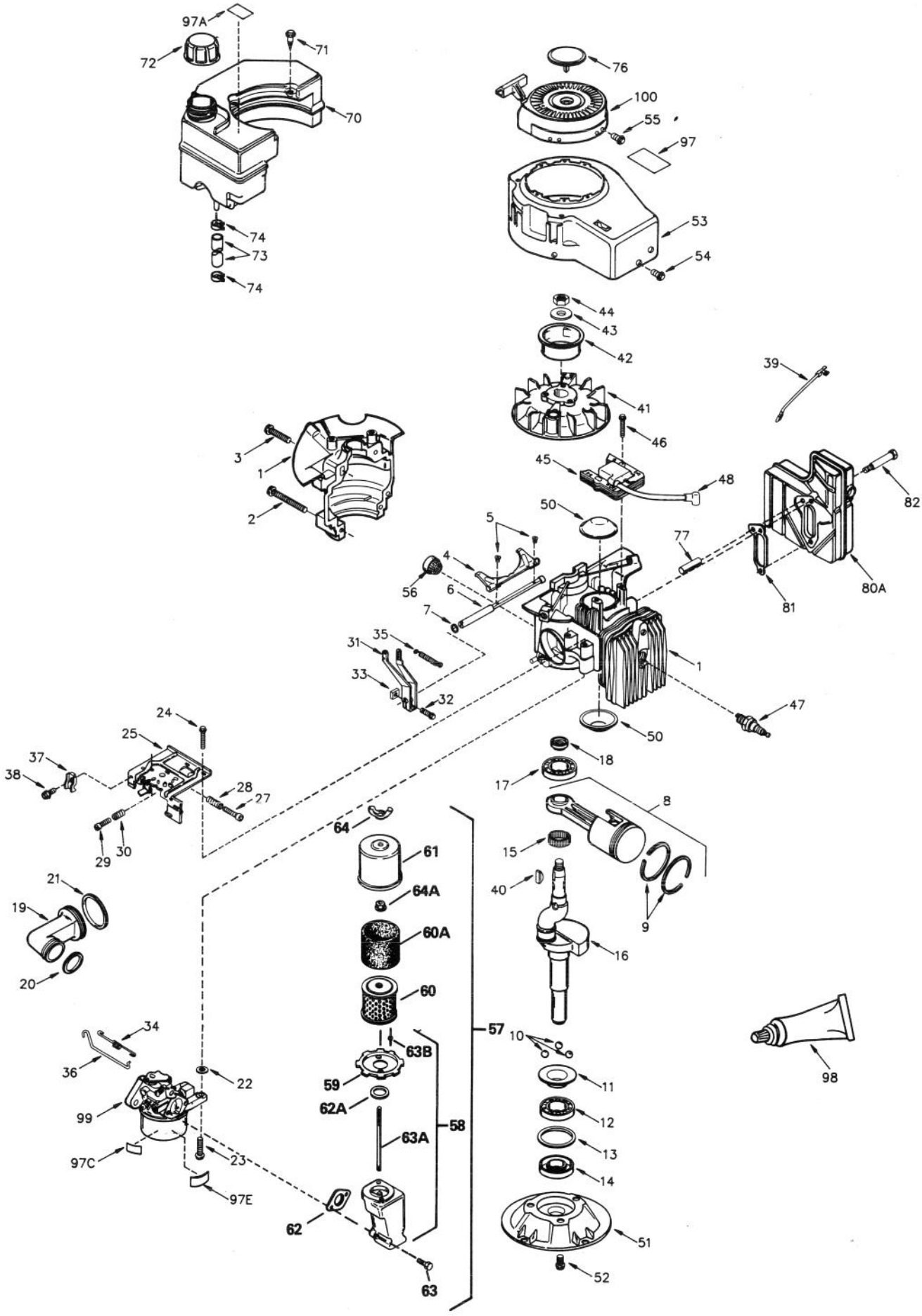

ENGINE TECUMSEH MODEL NO. TVS840-8016B (Continued)

Ref. No.	Part No.	Description	No. Used
50	570683	Cover, Port	2
51	330180	Adapter	1
52	792067	Screw, Hex washer hd. taptite	3
53	350430	Housing, Blower	1
54	650894	Screw, Hex washer hd. taptite	4
55	650884	Screw, Hex washer hd.	4
56	430233	Filter, Fuel (w/brass collar)	1
57	730575	Dual Upright Canister Air Cleaner Kit (Incl. Ref. #58, 60, 60A, 61, 62, 63, 64 & 97B)	1
58	450249	Elbow Assy., Air Cleaner (Incl. Ref. #59, 62A, 63A & 63B)	1
59	34699	Bracket, Air Cleaner	1
60	34782	Filter, Air Cleaner (Incl. Ref. #64A)	1
60A	34783	Filter, Pre-Air	1
61	34781	Cover, Air Cleaner	1
62	27272A	Gasket, Air Cleaner-To-Carburetor	1
62A	34698A	Gasket, Air Cleaner Bracket-To-Elbow	1
63	650163	Screw, Fil hd.	2
63A	650901	Stud, 1/4-20 x 4.89 threaded both ends	1
63B		Pop Rivet (Can be purchased locally.)	2
64	650513	Nut, Wing	1
64A	650825	Nut & Lockwasher	1
70	410258	Fuel Tank Assy.	1
71	650895	Screw, Hex hd. Shakeproof washer	3
72	410259	Cap, Fuel	1
73	29774	Line, Fuel	1
74	26460	Clamp, Fuel Line	2
76	35392	Plug, Starter	1
77	390315	Pin, Spirol	1
80A	390316	Muffler (Exhaust towards spark plug) (w/glass pack)	1
81	510343A	Gasket, Muffler	1
82	650893	Screw, Hex hd. taptite	2
97	34686	Decal, Name	1
97A	550230	Decal, Fuel/mix (Bilingual)	1
97C	34144	Decal, Primer (Bilingual)	1
97E	550234	Decal, Bowl nut instruction (Bilingual)	1
98	510334	Gasket Eliminator	1
99	632434	Carburetor (Incl. Ref. #20)	1
100	590621	Starter, Rewind (w/90" rope)	1

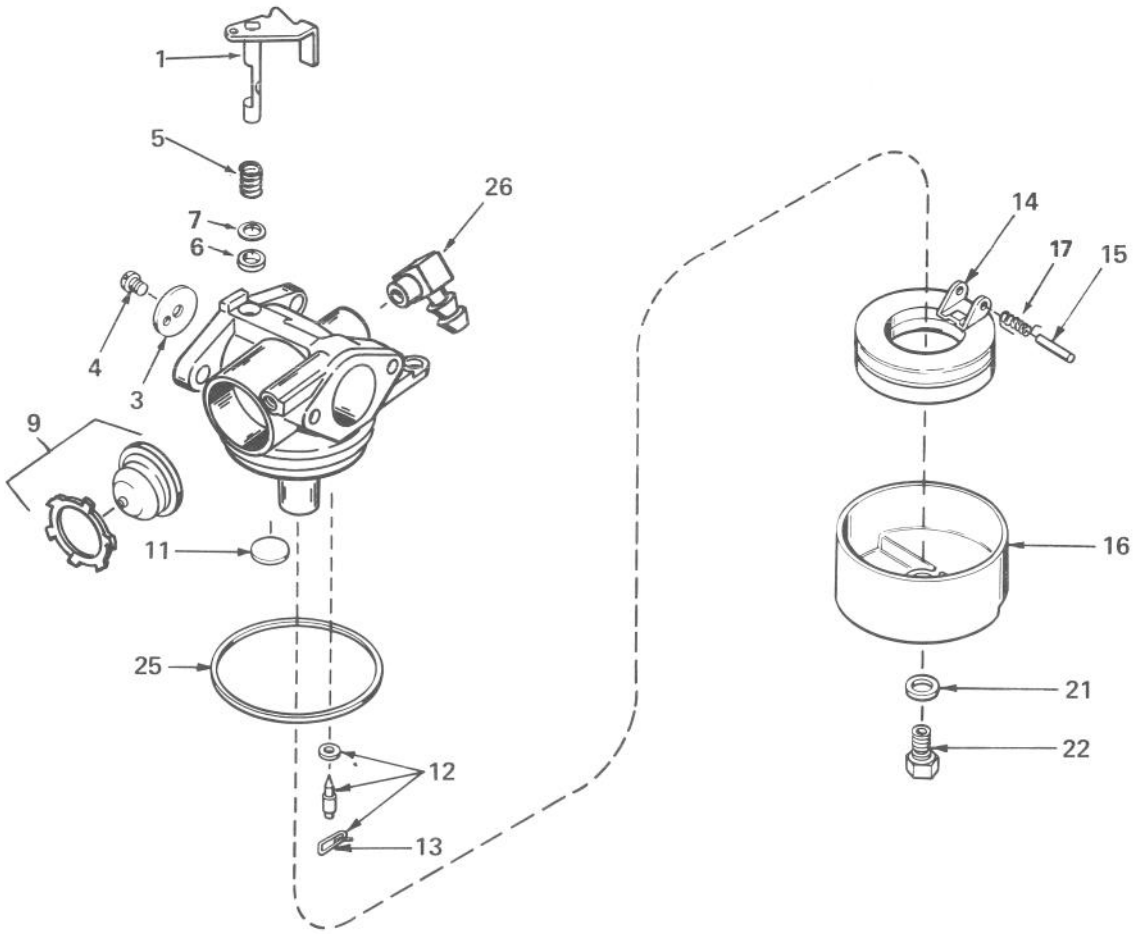

CARBURETOR NO. 632434

Ref. No.	Part No.	Description	No. Used
1	632432	Shaft & Lever Assy., Throttle	1
3	631757	Shutter, Throttle	1
4	650506	Screw, Throttle Shutter	1
5	632169	Spring, Throttle	1
6	631183	Seal, Dust	1
7	631184	Washer, Flat	1
9	632433	Bulb & Retainer, Primer	1
11	631027	Plug, Welch	1
12	631021	Inlet Needle, Seat & Clip Assy. (Incl. Ref. #13)	1

Ref. No.	Part No.	Description	No. Used
13	631022	Clip, Inlet Needle	1
14	632019	Float, Carburetor	1
15	631024	Shaft, Float	1
16	631867	Bowl, Float	1
17	632386	Spring, Float Shaft	1
21	27110	Washer, Fiber	1
22	632435	Nut, Float Bowl (L.H.)	1
25	631028	Gasket, Bowl-to-Body	1
26	631807	Fitting, Fuel Inlet	1

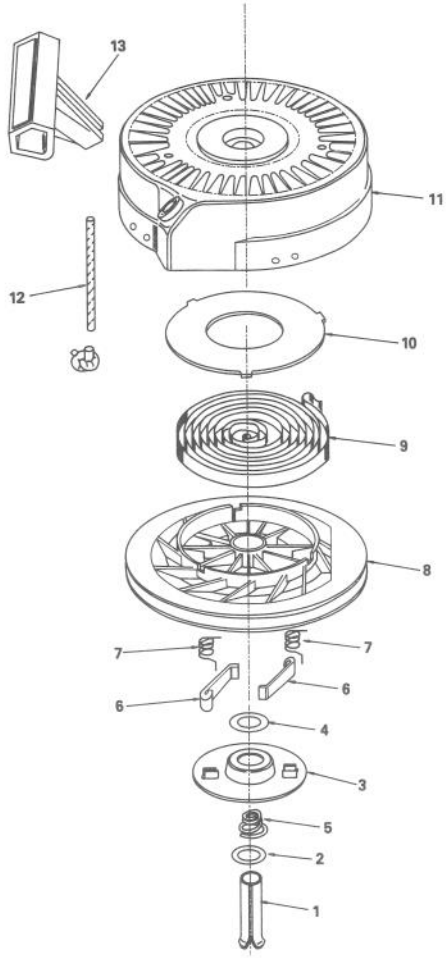

REWIND STARTER NO. 590621

Ref. No.	Part No.	Description	No. Used
1	590599A	Pin, Spring (Incl. Ref. #4)	1
2	590600	Washer	1
3	590615	Retainer	1
4	590601	Washer	1
5	590598	Spring, Brake	1
6	590616	Dog, Starter	2
7	590617	Spring, Dog	2

Ref. No.	Part No.	Description	No. Used
8	590618	Pulley	1
9	590619	Spring, Rewind	1
10	590620	Cover, Spring	1
11	590622	Housing Assy., Starter	1
12	590535	Rope, Starter (Length 98" & 9/64" dia.)	1
13	590452	Handle, Starter	1

PRODUCT CHANGES

In an effort to make improvements available to TORO owners as quickly as possible, minor changes are incorporated into Toro's products from time to time that do not become immediately shown in the Parts Catalog. If such a change apparently has been made in your unit, which is not reflected in your manual, see your TORO Distributor or his Authorized TORO Service Dealer for information and part numbers.

IDENTIFICATION AND ORDERING

MODEL AND SERIAL NUMBERS

The Mower has two identification numbers: a model number and a serial number. The two numbers are stamped on a decal which is located on the mower housing between the rear wheels. In any correspondence concerning the mower, supply model and serial numbers to assure that correct information and replacement parts are obtained.

To order replacement parts from an Authorized TORO Service Dealer, supply the following information:

1. Model and serial numbers of the mower.
2. Part number, description, and quantity of part(s) desired.

Note: Do not order by reference number if a parts catalog is being used; use the PART NUMBER.

The Toro Promise

A Two Year Limited Warranty

On All

Gasoline Powered Consumer Products

The Toro Company promises to repair your TORO Product if defective in materials or workmanship. The following time periods from the date of purchase apply:

Residential Product ..... 2 Years
Residential Products Used Commercially ..... 45 Days

The costs of parts and labor are included, but the customer pays the transportation costs. Just return any residential product to an Authorized TORO Service Dealer or TORO Distributor.

Should you feel your TORO Product is defective and wish to rely on The Toro Promise, the following procedure is recommended:

1. Contact any Authorized TORO Service Dealer, TORO Master Service Dealer, or TORO Distributor (the Yellow Pages of your telephone directory is a good reference source).
2. He will either instruct you to return the product to him or recommend another Authorized TORO Service outlet which might be more convenient.
3. Bring the product along with your original sales slip, or other evidence of purchase date, to the service dealer.
4. The servicing dealer will inspect the unit, advise you whether the product is defective and, if so, make all repairs necessary to correct the defect without extra charge to you.

If for any reason you are dissatisfied with the dealer's analysis of the defect or the service performed, you may contact us.

Write:

TORO Consumer Service Department
8111 Lyndale Avenue South
Minneapolis, Minnesota 55420

The above remedy of product defects through repair by an Authorized TORO Service Dealer is the purchaser's sole remedy for any defect.

THERE IS NO OTHER EXPRESS WARRANTY. ALL IMPLIED WARRANTIES OF MERCHANTABILITY AND FITNESS FOR USE ARE LIMITED TO THE DURATION OF THE EXPRESS WARRANTY.

Some states do not allow limitations on how long an implied warranty lasts, so the above limitation may not apply to you.

This warranty applies only to parts or components which are defective and does not cover repairs necessary due to normal wear, misuse, accidents, or lack of proper maintenance. Regular, routine maintenance of the unit to keep it in proper operating condition is the responsibility of the owner.

All warranty repairs reimbursable under The Toro Promise must be performed by an Authorized TORO Service Dealer using Toro approved replacement parts.

Repairs or attempted repairs by anyone other than an Authorized TORO Service Account are not reimbursable under The Toro Promise. In addition, these unauthorized repair attempts may result in additional malfunctions, the correction of which is not covered by warranty.

THE TORO COMPANY IS NOT LIABLE FOR INDIRECT, INCIDENTAL OR CONSEQUENTIAL DAMAGES IN CONNECTION WITH THE USE OF THE PRODUCT INCLUDING ANY COST OR EXPENSE OF PROVIDING SUBSTITUTE EQUIPMENT OR SERVICE DURING PERIODS OF MALFUNCTION OR NON-USE.

Some states do not allow the exclusion or limitation of incidental or consequential damages, so the above limitation or exclusion may not apply to you.

This warranty gives you specific legal rights, and you may also have other rights which vary from state to state.

COUNTRIES OTHER THAN THE UNITED STATES OR CANADA

Customers who have purchased TORO products exported from the United States or Canada should contact their TORO Distributor (Dealer) to obtain guarantee policies for your country, province or state. If for any reason you are dissatisfied with your Distributor's service or have difficulty obtaining guarantee information, contact the TORO importer. If all other remedies fail, you may contact us at The Toro Company.

Compliance with Radio Interference Regulations Certified.
Certifie Conforme au Reglement sur le Brouillage Radioelectrique.