FORM NO. 3313-800 REV. A

TORO®

MODEL NO. 16793-9000001 THRU
0000001 & UP

PARTS CATALOG

21" S.P. SIDE DISCHARGE KEY-LECTRIC

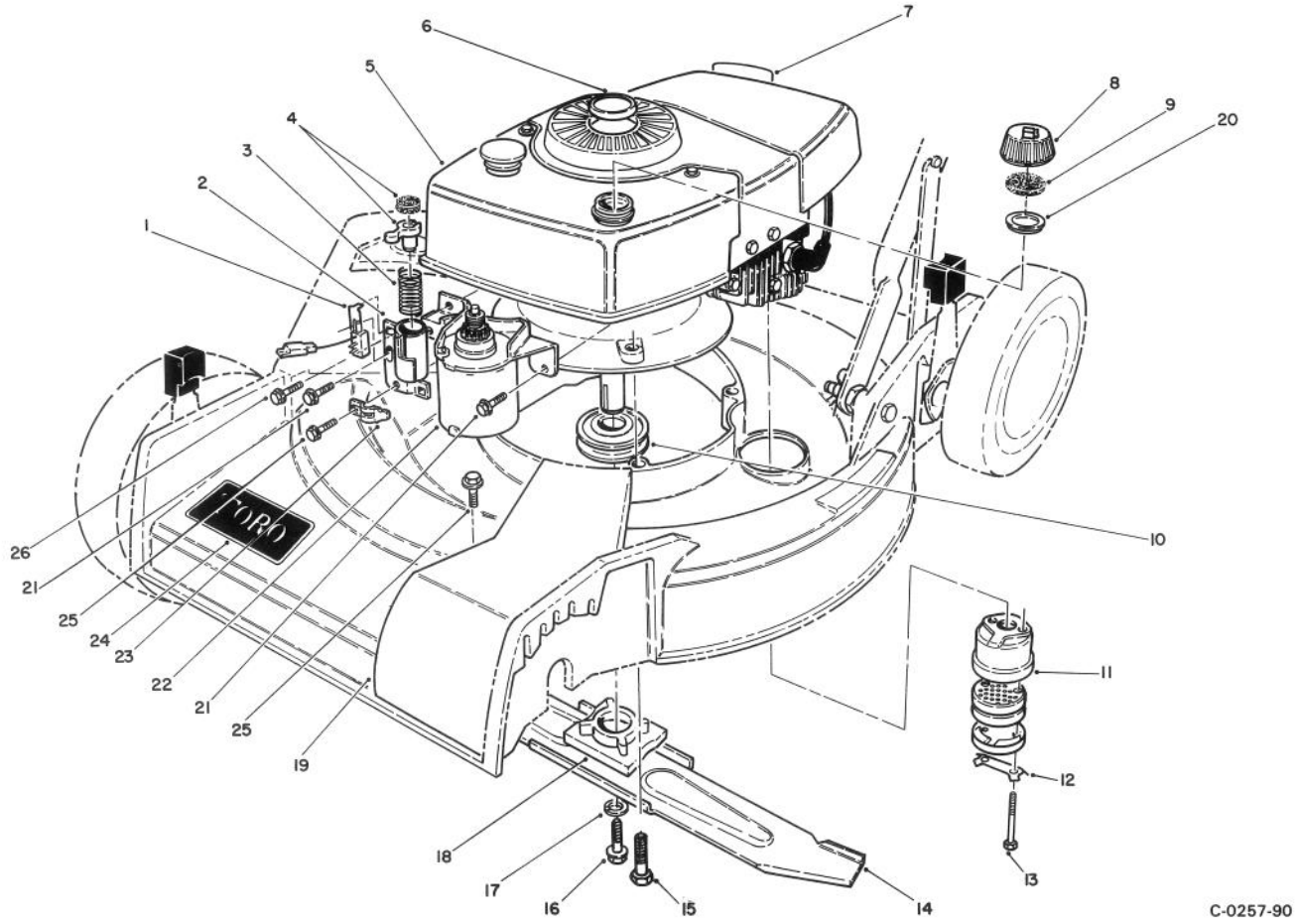

ENGINE ASSEMBLY

Ref. No.	Part No.	Description	No. Used
1	70-2490	Switch — Pushbutton	1
2	46-5840	Tube Assembly	1
3	47-2180	Spring — Compression	1
4	47-7350	Plunger & Pad Assembly	1
5		Engine	1
6	38-1480	Plug Button	1
7	37-1580	Decal — Maintenance	1
8	42-0682	Gas Cap Assembly (Incl. Ref. #9 & 20)	1
9	2210-144	Gasket	1
10	46-7910	Pulley — Driver	1
11	5-4769	Muffler Assembly (Incl. Ref. #12 & 13)	1
12	3-5094	Locking Clip	1

Ref. No.	Part No.	Description	No. Used
13	321-20	Capscrew	2
14	20-2720	Blade — 21"	1
15	11-0580	Screw — Engine	3
16	26-0671	Screw — Blade	1
17	3253-22	Lockwasher	1
18	49-7900	Retainer — Blade	1
19	46-4780	Belt Cover	1
20	2210-143	Baffle	1
21	12-3270	Screw — Thread Forming	2
22	49-4210	Starter Motor Assembly	1
23	46-6530	Clamp — Cable	1
24	70-2200	Decal — Toro	1
25	12-5450	Screw — Thread Forming	2
26	11-9760	Screw — Thread Forming	1

©The TORO Company — 1989

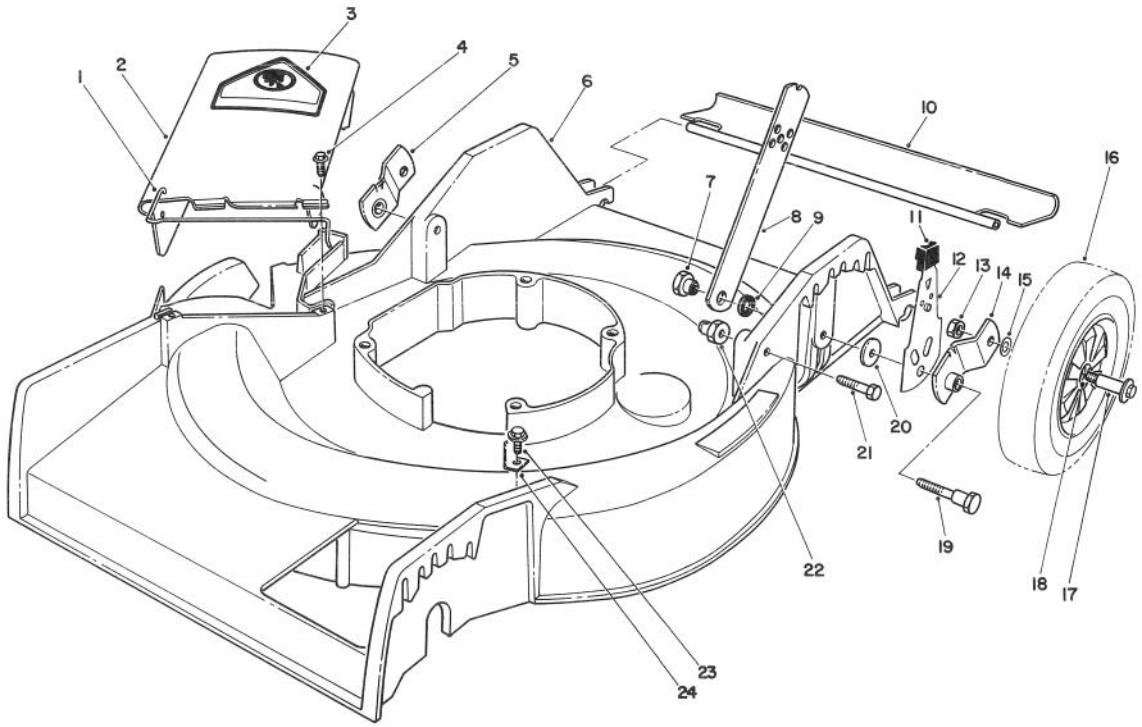

C-0258-90

HOUSING ASSEMBLY

Ref. No.	Part No.	Description	No. Used
1	20-2640	Hinge Spring	1
2	13-4049	Deflector (Incl. Ref. #1 & 3)	1
3	39-5770	Decal Danger	1
4	46-6811	Screw Assembled Washer	2
5	20-2130	Pivot Arm Assembly (B)	1
6	13-4769	Housing — 21″	1
7	27-6520	Shoulder Nut	2
8	27-7080	Latch Handle	2
9	3-3287	Spacer — Handle Latch	2
10	66-5990	Shield Rear	1
11	25-7740	Knob — Spring Arm	2
12	66-6030	Spring Arm Assembly	2
13	52-3620	Locknut	2

Ref. No.	Part No.	Description	No. Used
14	20-2140	Pivot Arm Assembly (A)	1
15	40-1940	Washer — Wheel Bolt	2
16	27-6200	Wheel & Tire Assembly (Incl. Ref. #18)	2
17	27-6230	Wheel Bolt	2
18	27-6250	Bushing	4
19	28-8880	Pivot Screw	2
20	33-0390	Washer — Pivot	2
21	322-6	Capscrew Hex Hd.	2
22	12-2080	Shoulder Nut	2
23	32144-70	Screw — Thread Forming	1
24	70-8080	Belt Guide	1

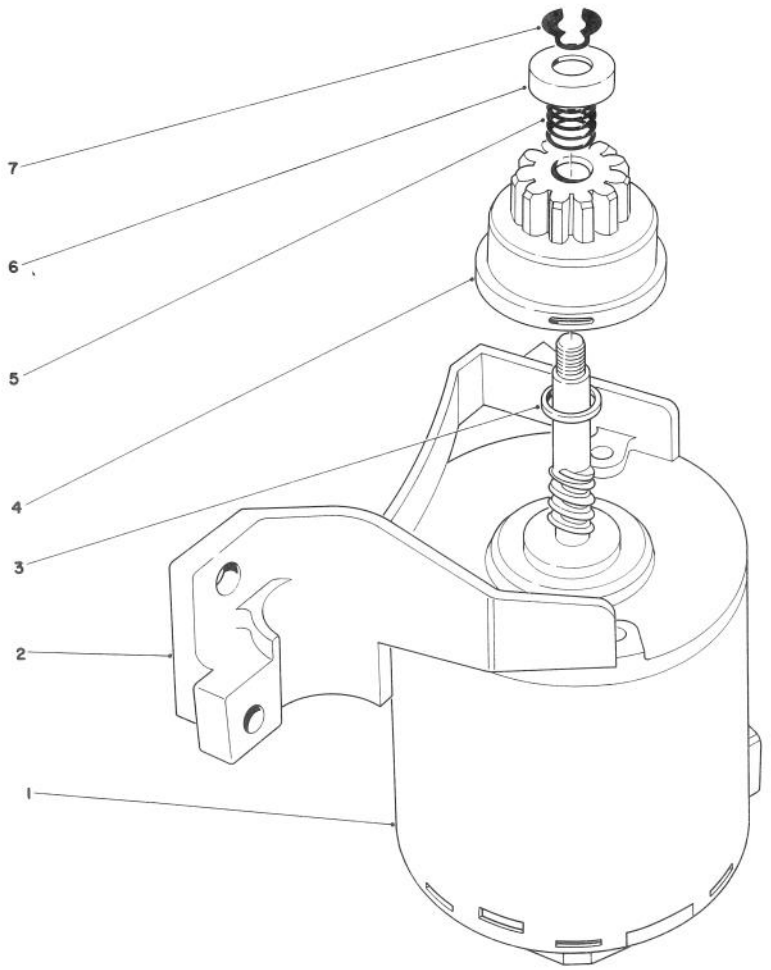

C-0259-90

STARTER ASSEMBLY

Ref. No.	Part No.	Description	No. Used
1	218-543	End Frame w/Brushes & Electrical Terminal	1
2	218-541	End Frame w/Bushing	1
3	23-9591	Spacer	1
4	43-4370	Pinion Assembly	1

Ref. No.	Part No.	Description	No. Used
5	44-0500	Spring — Compression	1
6	49-2170	Pinion Stop	1
7	32151-47	Ring — Retaining Ext.	1
*	49-4210	Starter Assembly (Incl. Ref. #1-7)	1

* Not Illustrated

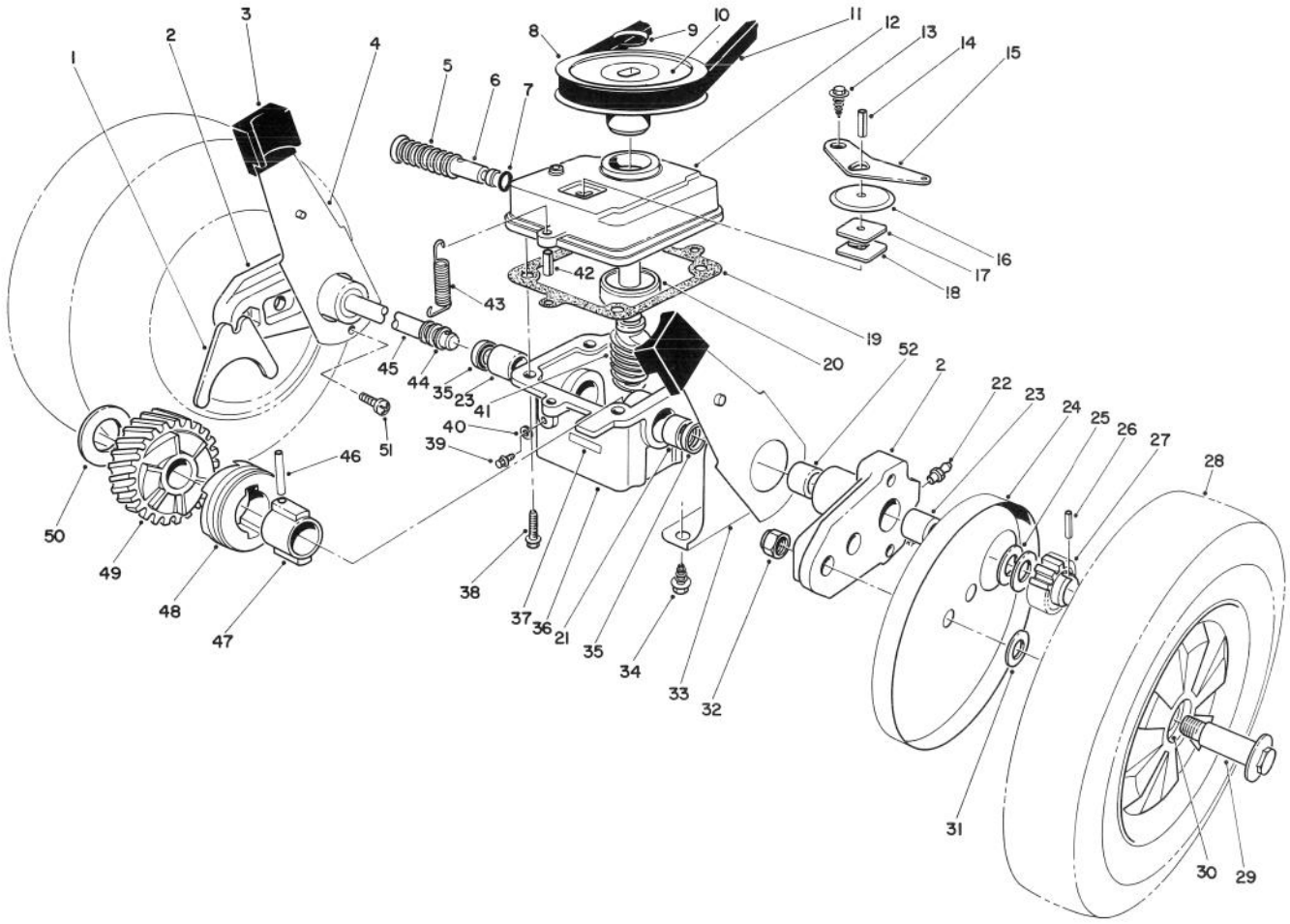

GEAR CASE ASSEMBLY

Ref. No.	Part No.	Description	No. Used
1	5-3247	Fork — Shifter	1
2	66-6001	Arm — Pivot (Incl. Ref. #22, 23 & 52)	2
3	25-7740	Knob — Arm	2
4	67-9370	Spring Arm Assembly	2
5	3-0731	Spring	1
6	46-8240	Rod — Shifter	1
7	237-137	"O" Ring	1
8	18-9760	Pulley	1
9	3290-346	Retainer — Push On	1
10	33-2450	Decal — Caution	1
11	5-4505	V-Belt	1
12	39-1101	Cover — Gear Case	1
13	32140-64	Screw — Self Tapping	1
14	32121-114	Roll Pin	1
15	5-3252	Arm — Shifter	1
16	52-7380	Dust Cover — Transmission	1
17	52-7370	Filter — Dust	1
18	3-0681	Plate — Latch	1
19	36-1000	Gasket — Gear Case	1
20	47-7250	Ball Bearing	1
21	47-2890	Bushing	1
22	302-56	Fitting — Grease	2

Ref. No.	Part No.	Description	No. Used
23	47-2900	Bushing	3
24	36-5630	Cover — Wheel	2
25	46-6510	Washer — Thrust	4
26	32121-98	Pin — Coil	2
27	46-6520	Gear — Pinion	2
28	11-1419	Wheel, Tire, & Gear Assembly (Incl. Ref. #30)	2
29	27-6230	Bolt — Wheel	2
30	27-6250	Bushing — Wheel	4
31	40-1940	Washer — Wheel Bolt	2
32	52-3620	Locknut	2
33	68-9000	Cap — End	2
34	32144-70	Screw — Self Tapping	4
35	47-6730	Seal — Oil	2
36	8-0479	Gear Case (Incl. Ref. #21, 23, & 35)	1
37	40-4755	Decal	1
38	11-9760	Screw	4
39	28-1550	Screw — Nylon	1
40	46-9640	Gasket	1
41	8-5679	Worm Shaft & Gear (Incl. Ref. #49)	1
42	32121-1	Pin — Roll	2

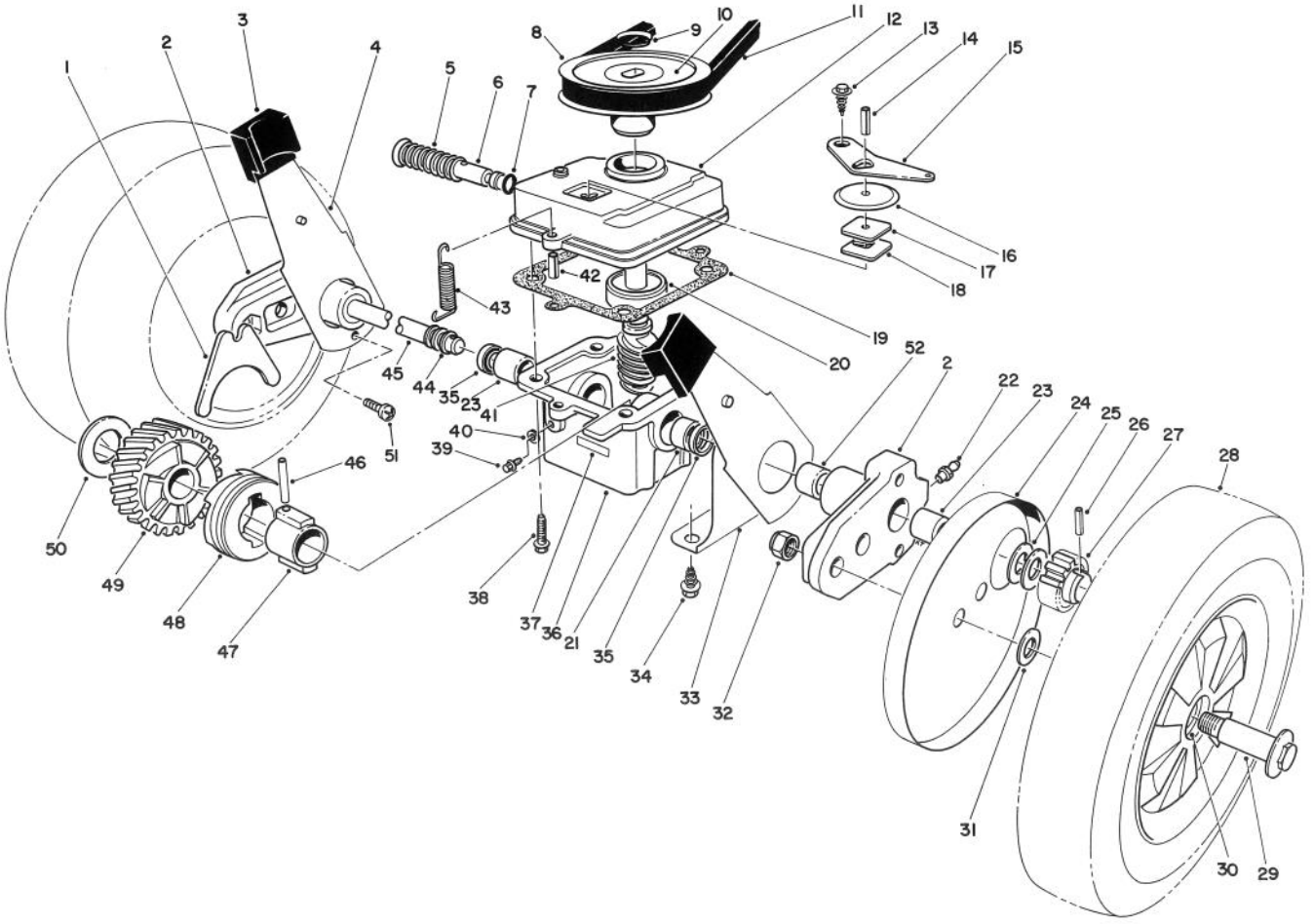

C-0260-90

GEAR CASE ASSEMBLY (Continued)

Ref. No.	Part No.	Description	No. Used
43	17-4490	Spring — Belt Tension	1
44	24-7920	Cover — Drive Shaft	1
45	66-6020	Shaft — Drive	1
46	32121-88	Pin — Coil	1
47	3-0721	Sleeve	1
48	19-5660	Jaw — Clutch	1
49		Helical Gear	1

Ref. No.	Part No.	Description	No. Used
50	3-0724	Washer — Thrust	1
51	63-8590	Screw Button Hd.	2
52	70-9760	Bushing	2
*	13-3479	Gear Case Assy. (Complete)	1
*	27-0490	Bearing & Shaft Tool	1
*†	39-9640	Metric Bearing Tool	1
*	27-0460	Tool Bushing	1

* Not Illustrated
† Use with 27-0490 Bearing & Shaft Tool

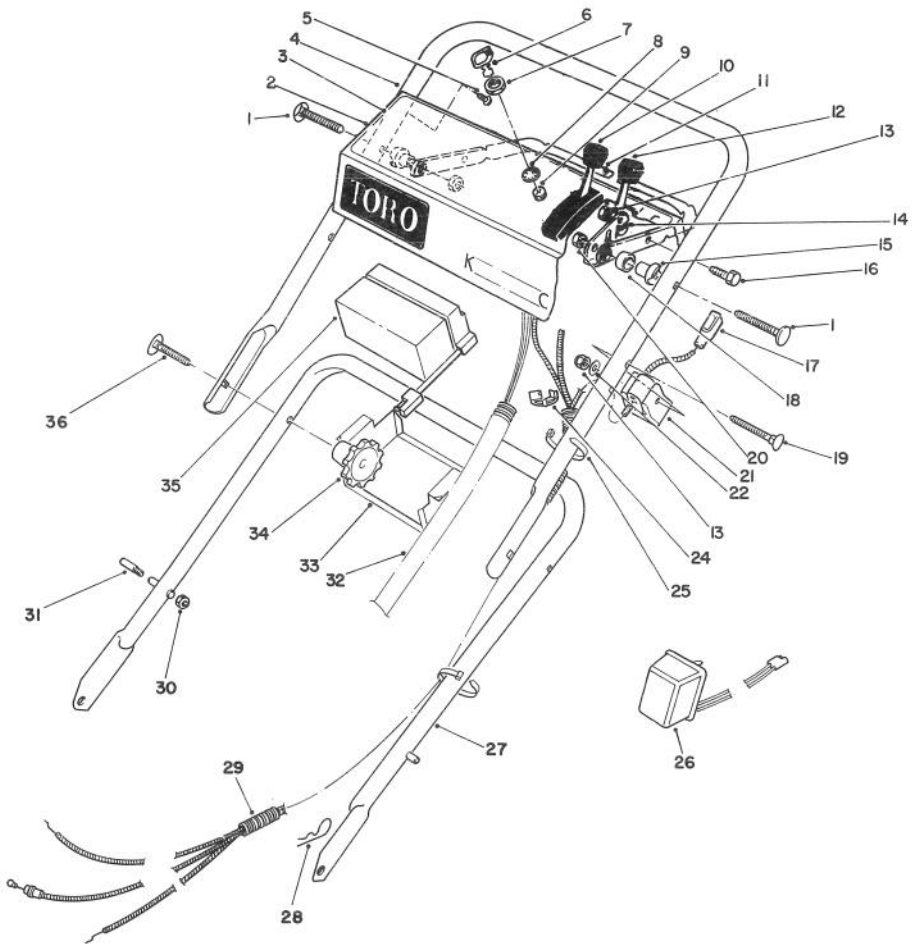

C-0261-90

HANDLE ASSEMBLY

Ref. No.	Part No.	Description	No. Used
1	17-9421	Screw — Handle	2
2	13-5709	Panel — Control (Incl. Ref. #3)	1
3	46-7430	Decal — Instructions	1
4	49-4234	Handle — Upper	1
5	32104-76	Screw — Self Tapping	5
6	63-8360	Key	1
7	218-461	Nut	1
8	3254-5	Lockwasher	1
9	46-5780	Switch — Starter (Incl. Ref. # 7 & 8)	1
10	46-6884	Control — Traction Bend Type 3 Sheath Lg. 53" (134.6 cm) Wire Lg. 2 3/16" (5.5 cm)	1
11	71-3080	Bar — Control	1
12	67-9811	Control — Throttle Bend Type 1 Sheath Lg. 36 1/2" (92.7 cm) Wire Lg. 2" (5.0 cm)	1
13	3296-42	Locknut	2

Ref. No.	Part No.	Description	No. Used
14	66-5350	Lever — Control	1
15	49-1630	Support — Spacer	2
16	321-3	Capscrew — Hex Hd.	1
17	43-4531	Cable — Brake	1
18	256-276	Spacer — Nylon	1
19	46-6434	Screw — Handle	1
20	3296-58	Locknut	2
21	46-6980	Support Cable	1
22	3256-22	Washer	1
24	2412-50	Clip	4
25	3290-378	Cable Tie	3
26	6-9780	Charger — Battery	1
27	49-1690	Lower Handle Assembly	1
28	3290-255	Hairpin — Cotter	2
29	46-6441	Cover — Control Cable	1
†30	3296-47	Locknut	2
†31	49-2750	Pin — Handle	2
32	46-5810	Wire Harness Assembly	1
33	63-8480	Retainer — Battery	1
34	19-4050	Knob — Handle	2
35	63-8570	Battery Assembly	1
36	17-9424	Handle — Screw	2

† Service Replacement Parts

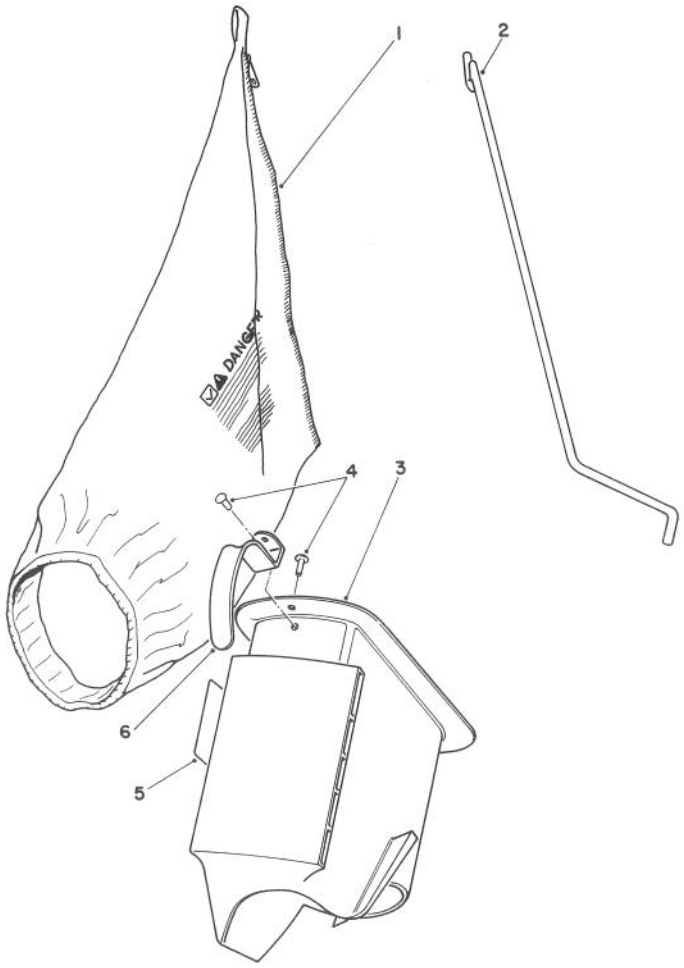

C-0187-90

BAGGING KIT NO. 47-6510 (Optional)

Ref. No.	Part No.	Description	No. Used
1	6-0929	Grass Bag	1
2	47-5830	Bag Rod	1
3	6-1089	Grass Chute (Incl. Ref. #4 & 6)	1

Ref. No.	Part No.	Description	No. Used
4	3295-26	Rivet	2
5	36-5230	Decal — Bag Chute	1
6	20-4650	Handle Chute	1

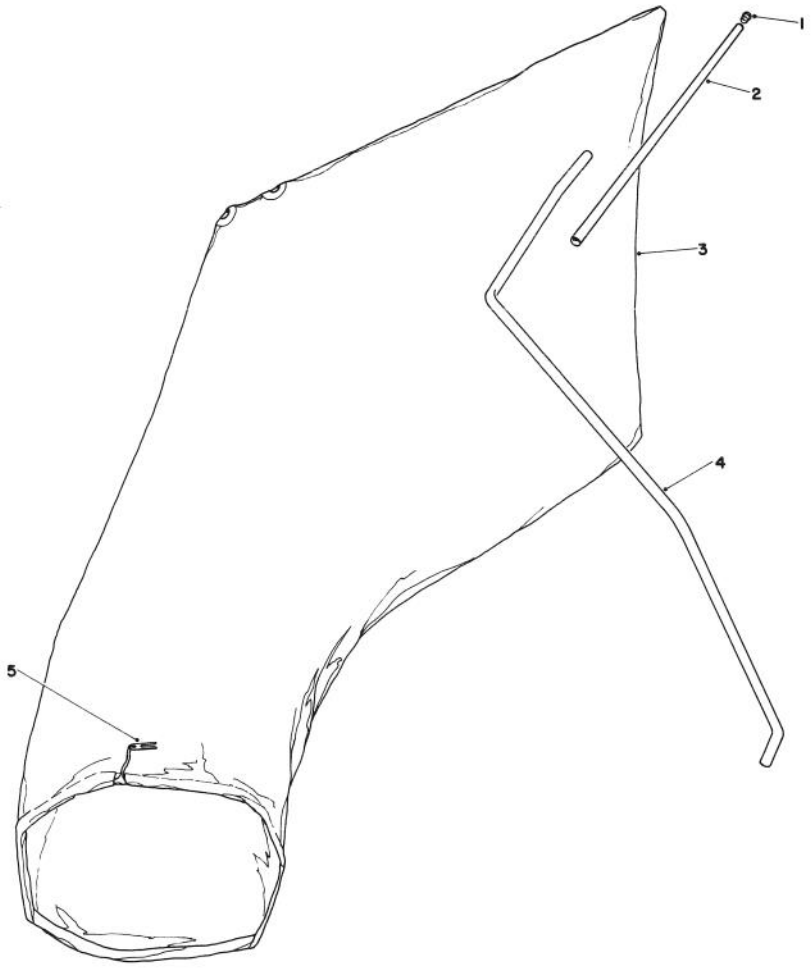

C-0186-90

GIANT BAGGING KIT NO. 29-9750 (Optional)

Ref. No.	Part No.	Description	No. Used
1	2410-29	Cap	1
2	29-7000	Tube 25"	1
3	8-4719	Bag (Incl. Ref. #5)	1

Ref. No.	Part No.	Description	No. Used
4	22-4820	Hanger Rod	1
5	3-2781	Bag Cord Fasteners	1

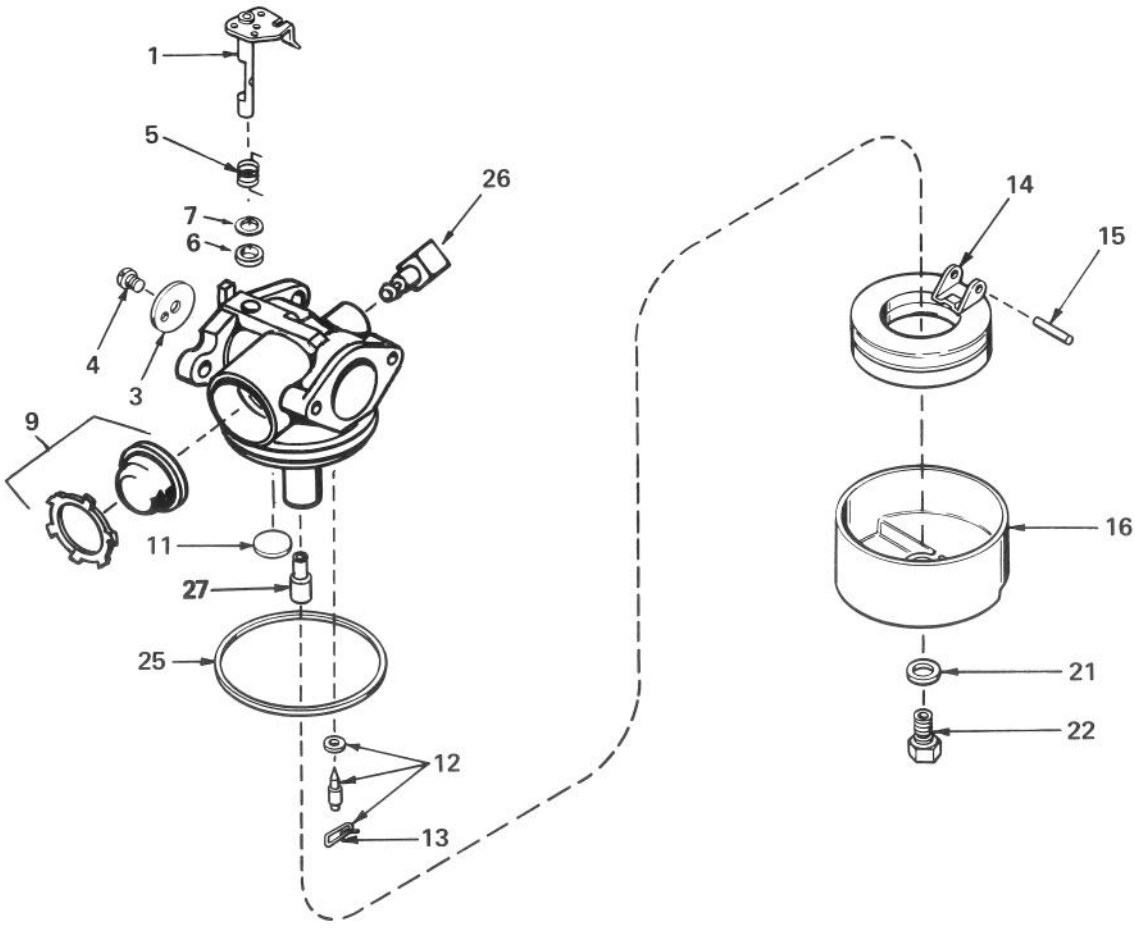

CARBURETOR NO. 632050A

Ref. No.	Part No.	Description	No. Used
1	631615	Shaft & Lever Assy., Throttle	1
3	631616	Shutter, Throttle	1
4	650506	Screw, Throttle Shutter	1
5	631767	Spring, Throttle Return	1
6	631971	Seal, Dust	1
7	631184	Washer, Flat	1
9	632047	Bulb & Retainer, Primer	1
11	631027	Plug, Welch	1
12	631021	Inlet Needle, Seat & Clip Assy. (Incl. Ref. #13)	1

Ref. No.	Part No.	Description	No. Used
13	631022	Clip, Inlet Needle	1
14	632019	Float, Carburetor	1
15	631024	Shaft, Float	1
16	631700	Bowl, Float	1
21	631334	Gasket, Bowl-to-body	1
22	631935	Nut, Float bowl	1
25	631028	Gasket, Bowl-to-body	1
26	631807	Fitting, Fuel Inlet	1
27	632158	Spacer	1

ENGINE TECUMSEH MODEL NO. TNT 100-10104F

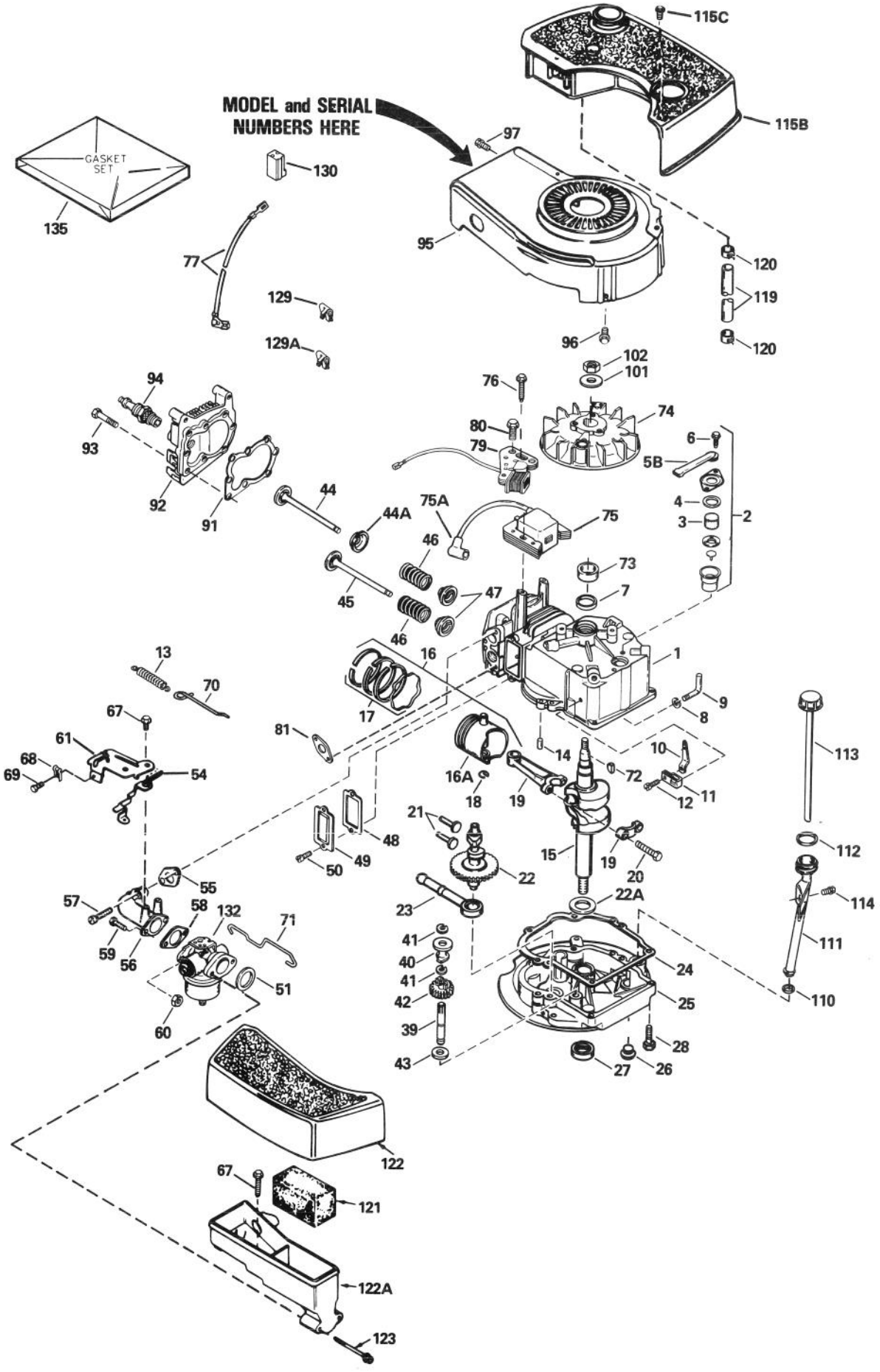

ENGINE TECUMSEH MODEL NO. TNT 100-10104F

Ref. No.	Part No.	Description	No. Used
1	34429A	Cylinder Assy. (Incl. Ref. #6 & 14)	1
2	34214A	Breather Assy. (Incl. Ref. #3-6 & 129)	1
3	33734	Element, Breather	1
4	*33735	Gasket, Breather	1
5B	33886	Tube, Breather	1
6	30200	Screw, Hex Washer Hd. Self-Tap	2
7	32600	Seal, Oil	1
8	28277	Washer, Flat	1
9	30589	Rod, Governor (Incl. Ref. #8)	1
10	32651	Lever, Governor	1
11	31335	Clamp, Governor Lever	1
12	650548	Screw, Hex Washer Hd.	1
13	33890	Spring, Extension	1
14	26727	Pin, Dowel	2
15	35482	Crankshaft Assy.	1
16	35544	Piston, Pin & Ring Assy. (STD.) (Incl. Ref. #16A, 17 & 18)	1
16	35545	Piston, Pin & Ring Assy. (.010 oversize) (Incl. Ref. #16A, 17 & 18)	1
16	35546	Piston, Pin & Ring Assy. (.020 oversize) (Incl. Ref. #16A, 17 & 18)	1
16A	35541	Piston & Pin Assy. (Std.) (Incl. Ref. #18)	1
16A	35542	Piston & Pin Assy. (.010 oversize) (Incl. Ref. #18)	1
16A	35543	Piston & Pin Assy. (.020 oversize) (Incl. Ref. #18)	1
17	35547	Ring Set, Piston (Std.)	1
17	35548	Ring Set, Piston (.010 oversize)	1
17	35549	Ring Set, Piston (.020 oversize)	1
18	20381	Ring, Piston Pin Retaining	1
19	30963B	Rod Assy., Connecting (Incl. Ref. #20)	1
20	32610A	Bolt, Connecting Rod	2
21	27241	Valve, Lifter	2
22	33553	Camshaft (Mech. Compression Release)	1
22A	32323	Washer, Thrust	1
23	29914	Pump Assy., Oil	1
24	*35261	Gasket, Mounting Flange	1
25	34311B	Flange, Mounting (Incl. Ref. #26, 27 & 39)	1
26	27244	Plug, Oil Drain	1
27	27897	Seal, Oil	1
28	650488	Screw, Hex Hd.	6
39	30574	Shaft, Governor	1
40	30588A	Spool, Governor	1
41	29193	Ring, Retaining	2
42	30591	Gear Assy., Governor (Incl. Ref. #43)	1
43	35479	Washer, Flat	1
44	29314B	Valve, Intake (Std.) (Incl. Ref. #47)	1
44	29315C	Valve, Intake (1/32" oversize) (Incl. Ref. #47)	1
44A	35390	Seal Assy., Intake Valve	1
45	29313C	Valve, Exhaust (Std.) (Incl. Ref. #47)	1
45	29315C	Valve, Exhaust (1/32" oversize) (Incl. Ref. #47)	1
46	31672	Spring, Valve	2
47	31673	Cap, Lower Valve Spring	2
48	*27234A	Gasket, Valve Spring Box	1
49	32755	Cover, Valve Spring Box	1
50	650128	Screw, Hex Hd.	2
51	*33051	Gasket, Air Cleaner	1
54	34310	Lever, RPM Adjusting	1
55	*34690A	Gasket, Intake Pipe	1
56	33004A	Pipe, Intake (Incl. Ref. #55)	1
57	650451	Screw, Hex Hd.	2
58	*31688A	Gasket, Carburetor	1
59	6201	Screw, Hex Hd.	2
60	29752	Nut & Lockwasher	2
61	33889A	Bracket Assy., Control (Incl. Ref. #54 & 67)	1
67	650804	Screw, Hex Washer Hd. Shoulder, Self-Tap	2
68	27793	Clip, Conduit	1
69	28942	Screw, Hex Washer Hd.	1
70	33151	Link, Governor Spring	1
71	34336	Link, Throttle	1
72	611004	Key, Flywheel	1
73	34080	Spacer, Flywheel Key	1
74	611050	Flywheel	1
75	34443A	Solid State Assy.	1
75A	610118	Cover, Spark Plug	1
76	650814	Screw, Torx Hex Washer Hd.	2
77	35020	Wire, Ground	1
79	34990	Coil, Alternator	1
80	650767	Screw, Hex Washer Hd.	2
81	*30081A	Gasket, Exhaust	1
91	*33015A	Gasket, Cylinder Head	1
92	34342	Head, Cylinder	1
93	6021A	Screw, Hex Flange Hd.	8
94	35395	Spark Plug, Resistor (Champion RJ-19LM or equivalent)	1
95	33891B	Housing, Blower	1
96	650561	Screw, Hex Washer Hd.	2
97	30200	Screw, Hex Washer Hd. Self-Tap	2
101	650815	Washer, Belleville	1
102	650816	Nut, Flywheel	1
110	34265	Gasket, Fill Tube	1
111	35581	Tube, Oil Fill	1
112	35499	"O" Ring	1
113	35582	Dipstick, Oil Fill	1
114	650562	Screw, Hex Washer Hd.	1
115B	33904B	Tank Assy. (Incl. Ref. #118 & 120)	1
115C	28763	Screw, Hex Washer Hd.	2
119	30705	Line, Fuel	1
120	26460	Clamp, Fuel Line	2
121	33896	Filter, Air Cleaner	1
122	33897	Cover, Air Cleaner	1
122A	33895	Body, Air Cleaner	1
123	650762	Screw, Fil. Hd.	2
129	29443	Clip, Spring	1
129A	33887	Clip, Breather	1
130	34977	Connector, Body	1
132	632050A	Carburetor (Incl. Ref. #58)	1
135	33906B	Gasket Set (Incl. items marked *)	1

* Indicates parts included in Gasket Set, Ref. #135.

AL-914251

Litho U.S.A.

PRODUCT CHANGES

In an effort to make improvements available to TORO owners as quickly as possible, minor changes are incorporated into Toro's products from time to time that do not become immediately shown in the Parts Catalog. If such a change apparently has been made in your unit, which is not reflected in your manual, see your TORO Distributor or his Authorized TORO Service Dealer for information and part numbers.

IDENTIFICATION AND ORDERING

MODEL AND SERIAL NUMBERS

The mower has two identification numbers: a model number and a serial number. The two numbers are stamped on a decal which is located on the mower housing between the rear wheels. In any correspondence concerning the mower, supply model and serial numbers to assure that correct information and replacement parts are obtained.

To order replacement parts from an Authorized TORO Service Dealer, supply the following information:

1. Model and serial number of the mower.
2. Part number, description, and quantity of part(s) desired.

Note: Do not order by reference number if a parts catalog is being used; use the PART NUMBER.

The Toro Promise

A TWO YEAR LIMITED WARRANTY

The Toro Company promises to repair your TORO Product if defective in materials or workmanship. The following time periods from the date of purchase apply:

Residential Product ..... 2 Years
Residential Products Used Commercially... 45 Days

The costs of parts and labor are included, but the customer pays the transportation costs. Just return any residential product to an Authorized TORO Service Dealer or TORO Distributor.

Should you feel your TORO Product is defective and wish to rely on The Toro Promise, the following procedure is recommended:

1. Contact any Authorized TORO Service Dealer, TORO Master Service Dealer, or TORO Distributor (the Yellow Pages of your telephone directory is a good reference source).
2. He will either instruct you to return the product to him or recommend another Authorized TORO Service outlet which might be more convenient.
3. Bring the product along with your original sales slip, or other evidence of purchase date, to the service dealer.
4. The servicing dealer will inspect the unit, advise you whether the product is defective and, if so, make all repairs necessary to correct the defect without extra charge to you.

If for any reason you are dissatisfied with the dealer's analysis of the defect or the service performed, you may contact us.

Write:

TORO Consumer Service Department
8111 Lyndale Avenue South
Minneapolis, Minnesota 55420

The above remedy of product defects through repair by an Authorized TORO Service Dealer is the purchaser's sole remedy for any defect.

THERE IS NO OTHER EXPRESS WARRANTY. ALL IMPLIED WARRANTIES OF MERCHANTABILITY AND FITNESS FOR USE ARE LIMITED TO THE DURATION OF THE EXPRESS WARRANTY.

Some states do not allow limitations on how long an implied warranty lasts, so the above limitation may not apply to you.

This warranty applies only to parts or components which are defective and does not cover repairs necessary due to normal wear, misuse, accidents, or lack of proper maintenance. Regular, routine maintenance of the unit to keep it in proper operating condition is the responsibility of the owner.

All warranty repairs reimbursable under The Toro Promise must be performed by an Authorized TORO Service Dealer using Toro approved replacement parts.

Repairs or attemped repairs by anyone other than an Authorized TORO Service Account are not reimbursable under The Toro Promise. In addition, these unauthorized repair attempts may result in additional malfunctions, the correction of which is not covered by warranty.

THE TORO COMPANY IS NOT LIABLE FOR INDIRECT, INCIDENTAL OR CONSEQUENTIAL DAMAGES IN CONNECTION WITH THE USE OF THE PRODUCT INCLUDING ANY COST OR EXPENSE OF PROVIDING SUBSTITUTE EQUIPMENT OR SERVICE DURING PERIODS OF MALFUNCTION OR NON-USE.

Some states do not allow the exclusion or limitation of incidental or consequential damages, so the above limitation or exclusion may not apply to you.

This warranty gives you specific legal rights, and you may also have other rights which vary from state to state.

COUNTRIES OTHER THAN THE UNITED STATES OR CANADA

Customers who have purchased TORO products exported from the United States or Canada should contact their TORO Distributor (Dealer) to obtain guarantee policies for your country, province or state. If for any reason you are dissatisfied with your Distributor's service or have difficulty obtaining guarantee information, contact the TORO importer. If all other remedies fail, you may contact us at The Toro Company.

Compliance with Radio Interference Regulations Certified.
Certifie Conforme au Reglement sur le Brouillage Radioelectrique.