FORM NO. 3313-804 Rev B

TORO®

MODEL NO. 51255-9000001 Thru
1000001 & UP

PARTS CATALOG

TORO 10"CUT SUPER HOME DUTY TRIMMER (1010)

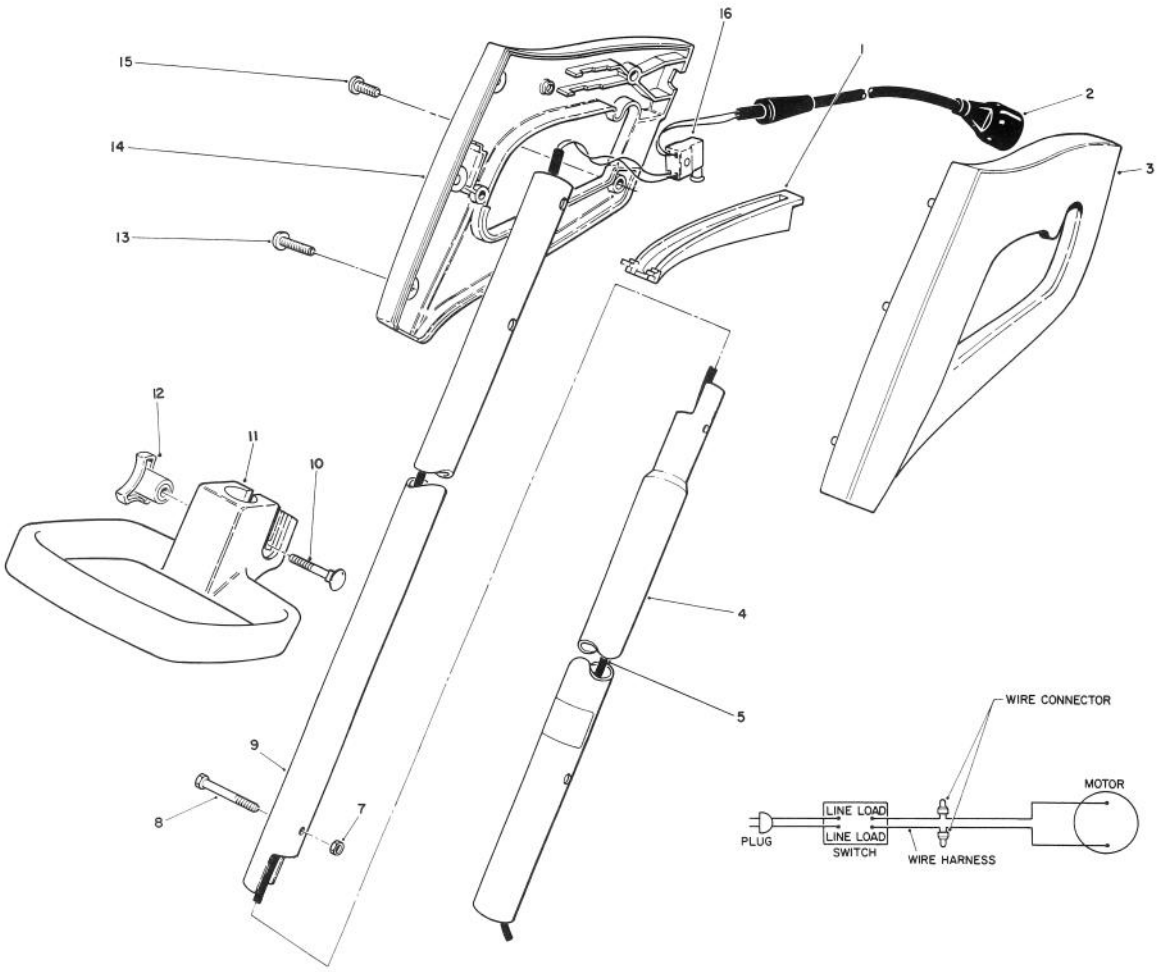

C-0280

HANDLE ASSEMBLY

Ref. No.	Part No.	Description	No. Used
1	64-4541	Bar - Switch	1
2	42-0773	Cord - Power	1
3	73-1121	Grip - Left Hand	1
4	64-8500	Tube - Lower Extension	
5	62-1811	Wire - Harness	1
7	3296-12	Nut - Lock	1
8	33-8950	Screw - Hex. Hd. Machine	1
9	64-7110	Tube - Upper Extension	1
10	33-5790	Bolt - Carriage	1

Ref. No.	Part No.	Description	No. Used
11	61-8902	Handle - Adjustment	1
12	73-4740	Knob - Adjustment	1
13	32104-121	Screw - Thread Forming	4
14	73-1111	Grip - Right Hand	1
15	32104-118	Screw - Thread Forming	1
16	64-4930	Switch - Single Speed	1
*	34-2692	Loose Parts (Incl. Ref. #7,8,10 & 12)	1

TPS

© The TORO Company - 1989 / 1990 Rev.

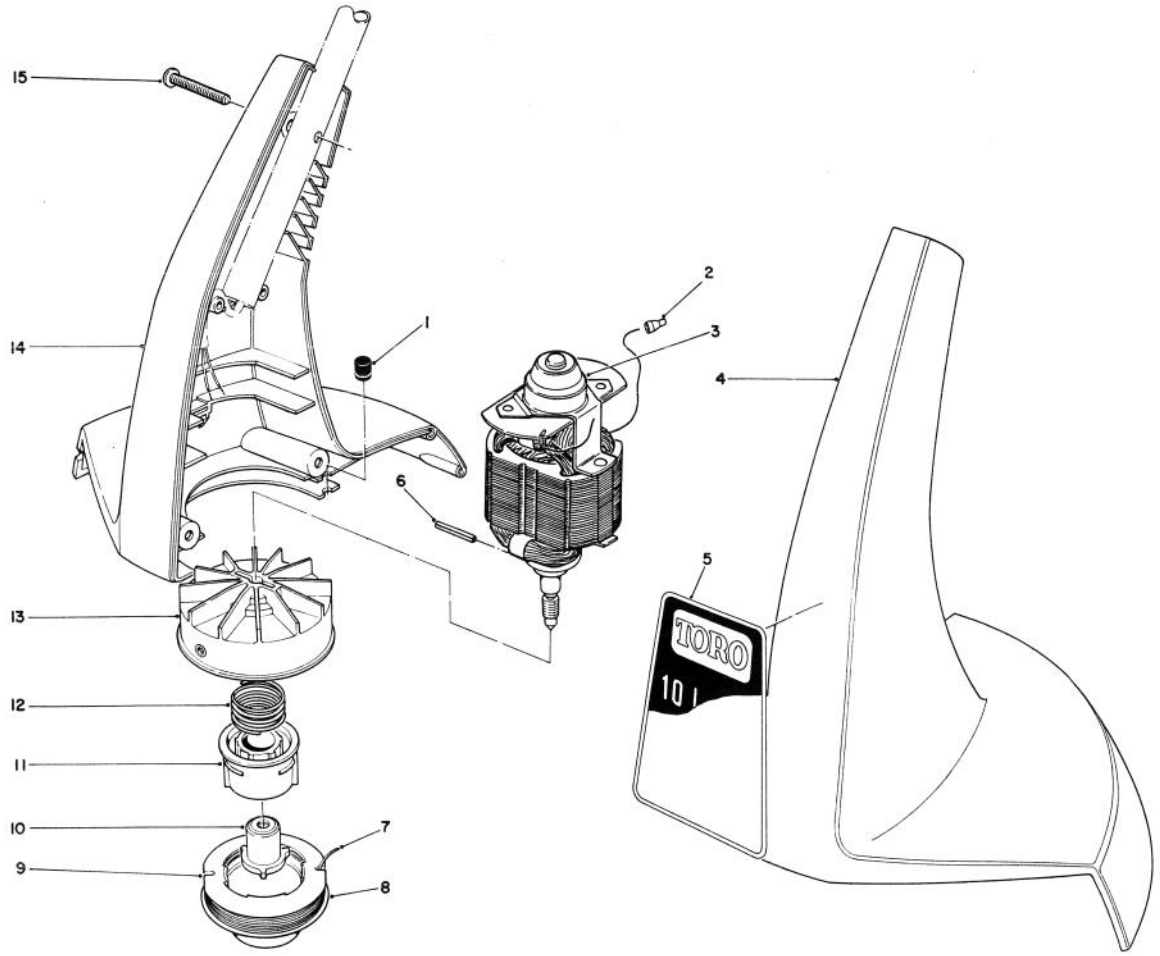

C-0281

MOTOR AND HOUSING ASSEMBLY

Ref. No.	Part No.	Description	No. Used
1	33-8710	Grommet	1
2	218-496	Connector - Electric	2
3	34-2580	Motor	1
4	73-1231	Housing - Left Hand	1
5	73-1180	Decal - Housing	1
6	32121-88	Pin - Coil	1
7	88011	Line - Cutting (30' .05 Dia.)	1
8	44-5520	Cap - Spool	1
9	88015	Line - Cutting (30' .05 Dia. Prewound on Spool)	1

Ref. No.	Part No.	Description	No. Used
10	34-9100	Driver - Detent	1
11	29-8120	Core - Spool	1
12	29-8230	Spring - Compression	1
13	33-8680	Fan Hub Assembly	1
14	34-5733	Housing Assembly,R.H. (Incl. Ref. #16 & 17)	1
15	32104-121	Screw - Thread Forming	6
*16		Rivet	2
*17		Blade - Knife	1

*Not Illustrated