FORM NO. 3313-825

TORO®

MODEL NO. 26651-9000001 & UP

PARTS CATALOG

21" S.P. REAR BAGGER

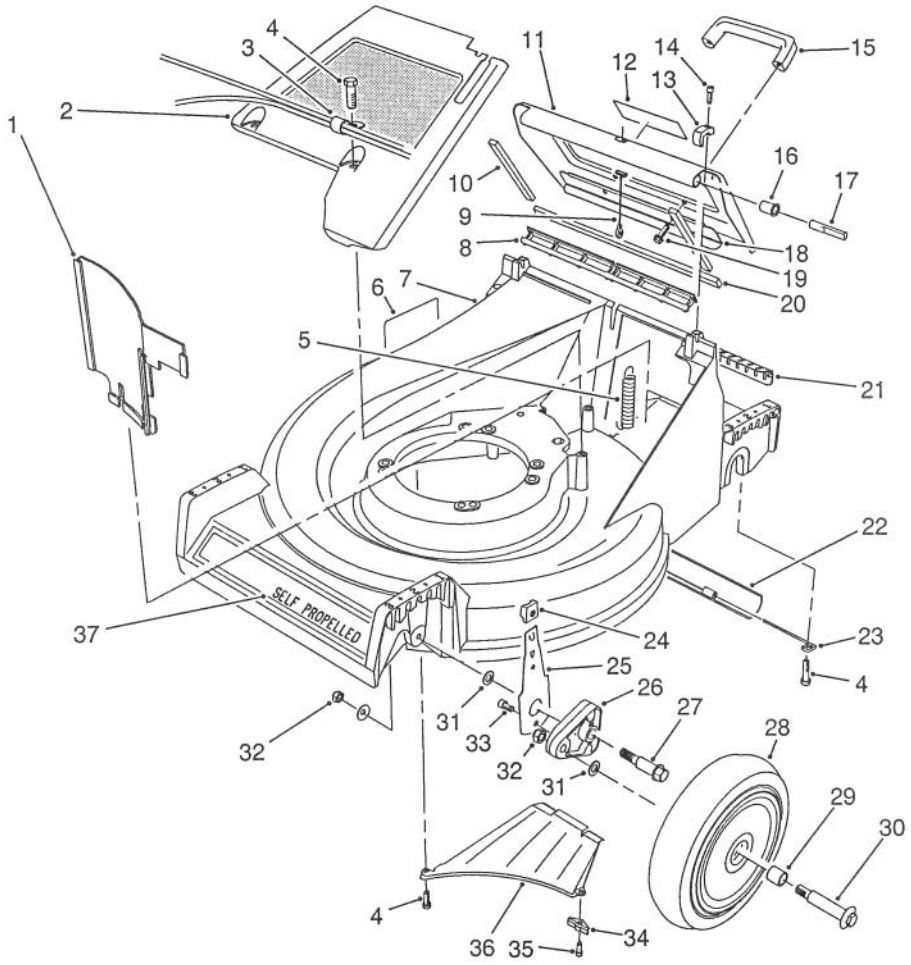

C-0310

HOUSING ASSEMBLY

Ref. No.	Part No.	Description	No. Used
1	66-0020	Panel - Vertical	1
2	65-5660	Panel - Screen	1
3	2412-68	Clamp - R	1
4	32144-70	Screw - Cap Hex. Hd.	5
5	65-5360	Spring - Extension	1
6	39-5770	Decal - Danger	1
7	13-6589	21" Housing Assembly (Incl. Ref. #6)	1
8	65-5160	Seal - Door	1
9	65-5370	Cable - Door	1
10	65-5480	Seal - Door Side	2
11	13-2189	Door - Discharge (Incl. Ref. #10, 12, 18 & 20)	1
12	63-9050	Decal - Warning	1
13	65-5140	Clamp - Hinge	2
14	65-5210	Screw - Hex. Socket Hd.	2

Ref. No.	Part No.	Description	No. Used
15	65-5100	Handle - Door	1
16	65-5460	Bushing - Door	2
17	65-5290	Pin - Hinge	2
18	66-0610	Brace - Door	1
19	46-8091	Screw - Handle	2
20	65-5490	Seal - Door (End)	1
21	65-5150	Cover - Access	1
22	65-5350	Shield - Trailing	1
23	66-0150	Hanger - Shield (L.H.)	1
*	66-0140	Hanger - Shield (R.H.)	1
24	25-7740	Knob - Spring Arm	2
25	66-0540	Arm - Front Spring	2
26	66-0580	Arm - Front Pivot	2
27	66-0560	Screw - Shoulder	2
28	11-9509	Wheel & Tire Assembly (Incl. Ref. #29)	2
29	27-6250	Bushing - Wheel	4

*Not Illustrated

© The TORO Company - 1989

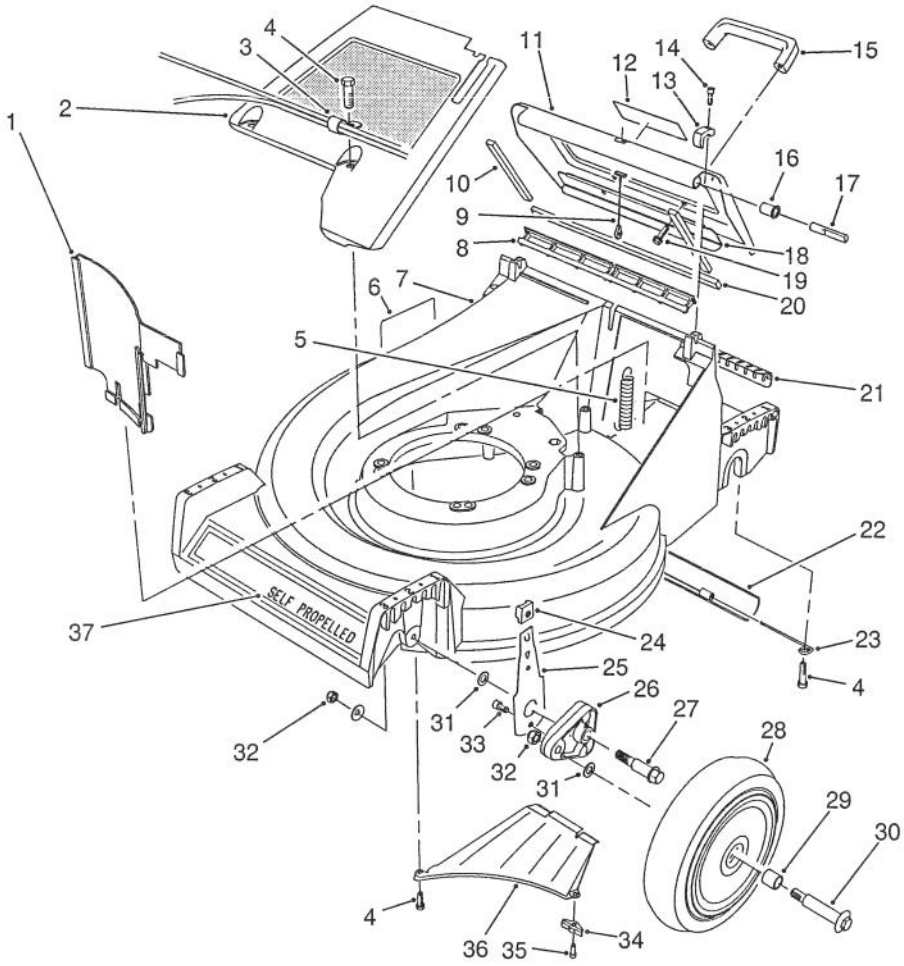

C–0310

HOUSING ASSEMBLY (Continued)

Ref. No.	Part No.	Description	No. Used
30	27-6231	Bolt - Wheel	2
31	40-1940	Washer - Wheel	4
32	52-3620	Nut - Lock	4
33	65-5220	Screw - Cap Socket Hd.	2

Ref. No.	Part No.	Description	No. Used
34	66-0640	Bracket - Discharge	1
35	65-5221	Screw - Bracket	1
36	65-5010	Ramp - Discharge	1
37	66-0480	Decal - 21"	1

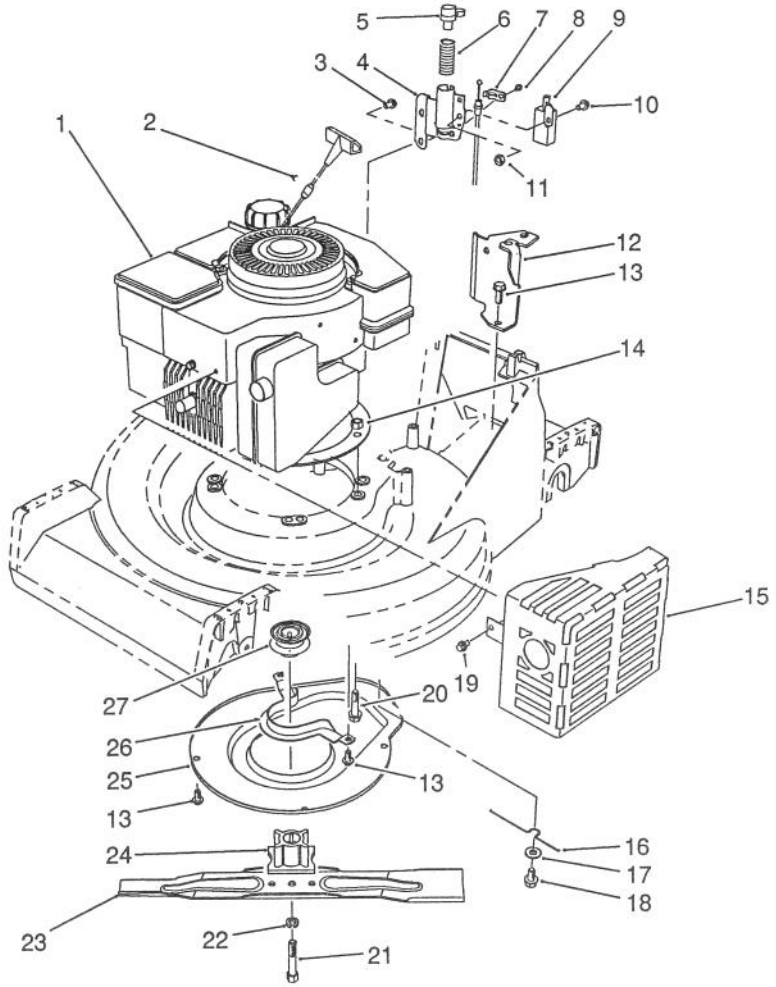

C-0311

ENGINE ASSEMBLY

Ref. No.	Part No.	Description	No. Used
†1		Engine – Tecumseh Model No. TVS840-8014B	1
2	3290-443	Staple – Rope Stop	1
3	12-3270	Screw – Self Tapping	2
4	70-7740	Tube – Brake	1
5	47-7350	Plunger – Brake	1
6	46-4130	Spring – Compression	1
7	46-6530	Clamp – Cable	1
8	12-5450	Screw – Self Tapping	1
9	47-6520	Switch – Push – Button	1
10	321-2	Screw – Cap Hex. Hd.	1
11	3296-42	Nut – Lock	1
12	66-0030	Bracket – Cable Support	1
13	32144-70	Screw – Self Tapping	6

Ref. No.	Part No.	Description	No. Used
14	52-3620	Nut – Lock	3
15	70-7710	Heat Shield – Muffler	1
16	66-0620	Retainer – Belt	1
17	3256-24	Washer – Flat	1
18	32144-15	Screw – Self Tapping	1
19	2210-250	Screw – Cap Hex. Hd.	3
20	3211-5	Bolt – Engine	3
21	26-0670	Bolt – Blade	1
22	3253-22	Washer – Lock	1
23	62-7700	Blade – 21"	1
24	62-7540	Retainer – Blade	1
25	65-5200	Shield	1
26	66-0570	Guide – Belt	1
27	62-7550	Pulley – Engine	1

†Obtain from your local Tecumseh Dealer

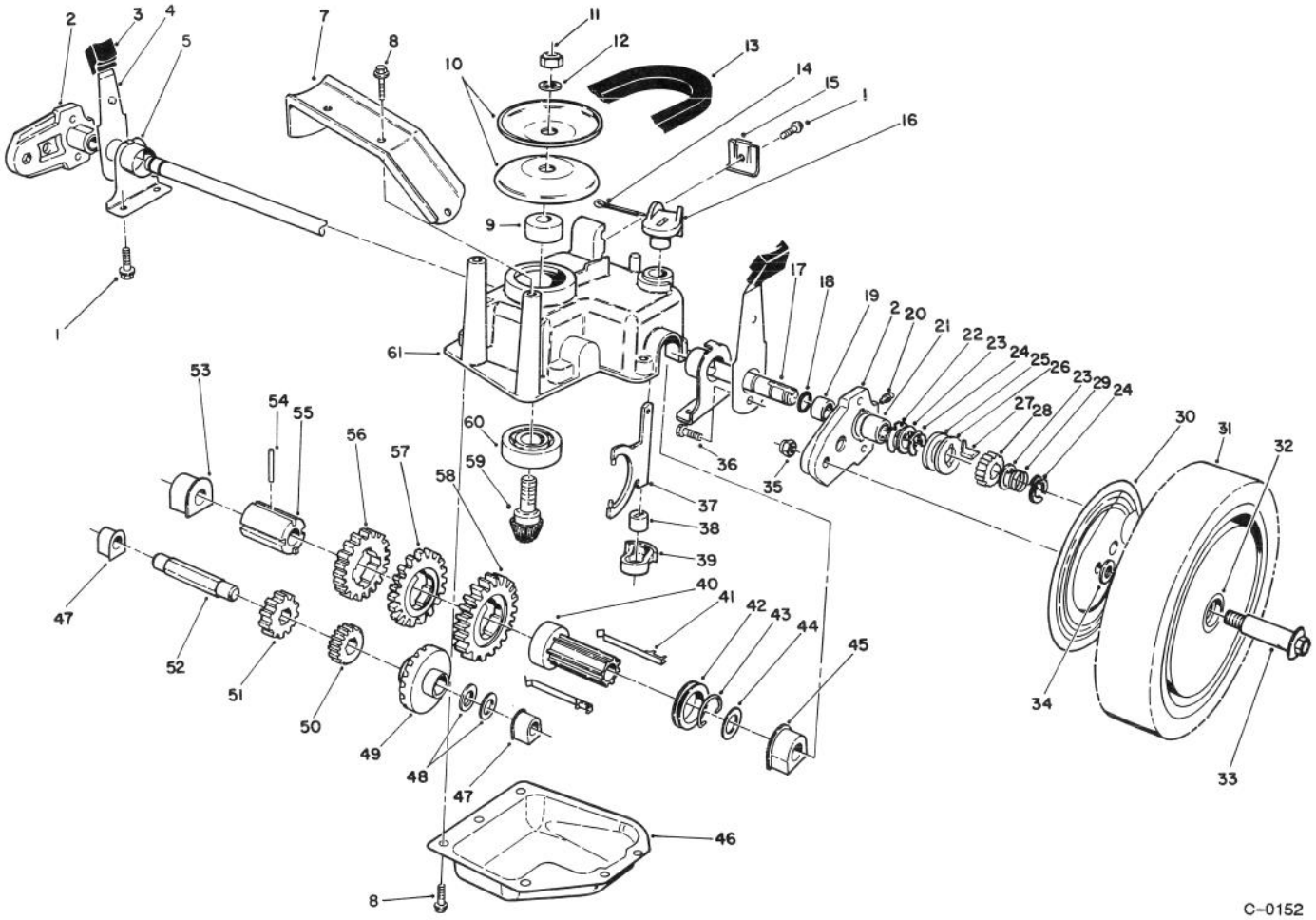

GEAR CASE ASSEMBLY

Ref. No.	Part No.	Description	No. Used
1	32144-70	Screw - Hex. Washer Hd.	5
2	65-5040	Pivot Arm Assembly (Incl. Ref. #19-21)	2
3	25-7740	Knob - Arm	2
4	65-5440	Spring Arm Assembly	2
5	66-0360	Cap - End	2
7	65-5190	Bracket - Belt Guide	1
8	49-2040	Screw - Self Tapping	8
9	62-6660	Spacer	1
10	60-8840	Pulley - Half	2
11	3296-5	Nut - Lock	1
12	3256-24	Washer - Flat	1
13	66-0210	V-Belt	1
14	3272-5	Pin - Cotter	1
15	66-0240	Clamp - Cable	1
16	66-0250	Lever - Shift	1
17	65-4770	Shaft - Output	1
18	237-153	Seal - O-Ring	2
19	47-2900	Bushing - Sleeve	2
20	302-56	Fitting - Grease	2
21	48-2060	Bearing -Needle	2
22	65-4730	Washer - Thrust (Inner)	2
23	65-4740	Washer - Thrust (Keyed)	4

Ref. No.	Part No.	Description	No. Used
24	65-2720	Ring - Retaining	4
25	65-4710	Ring - Friction	2
26	65-4760	Washer -Clutch	2
27	66-6050	Key - Rocking (L.H.)	1
*	66-6040	Key - Rocking (R.H.)	1
28	65-4750	Pinion	2
29	65-4720	Spring - Compression	2
30	63-5270	Cover - Wheel	2
31	11-9519	Wheel Tire & Gear Assy. (Incl. Ref. #32)	2
32	27-6250	Bushing - Wheel	4
33	27-6231	Bolt - Wheel	2
34	40-1940	Washer - Wheel Bolt	4
35	52-3620	Nut - Lock	2
36	65-5220	Screw - Cap Socket Hd.	2
37	60-8870	Yoke - Shift	1
38	29-9570	Bushing - Yoke	1
39	60-8810	Retainer - Shift Fork	1
40	60-8780	Sleeve - Shift Key	1
41	65-5230	Key - Shift	2
42	60-8760	Collar - Shift	1
43	65-5250	Clip - Spring	1
44	36-4780	Washer - Thrust	1

*Not Illustrated

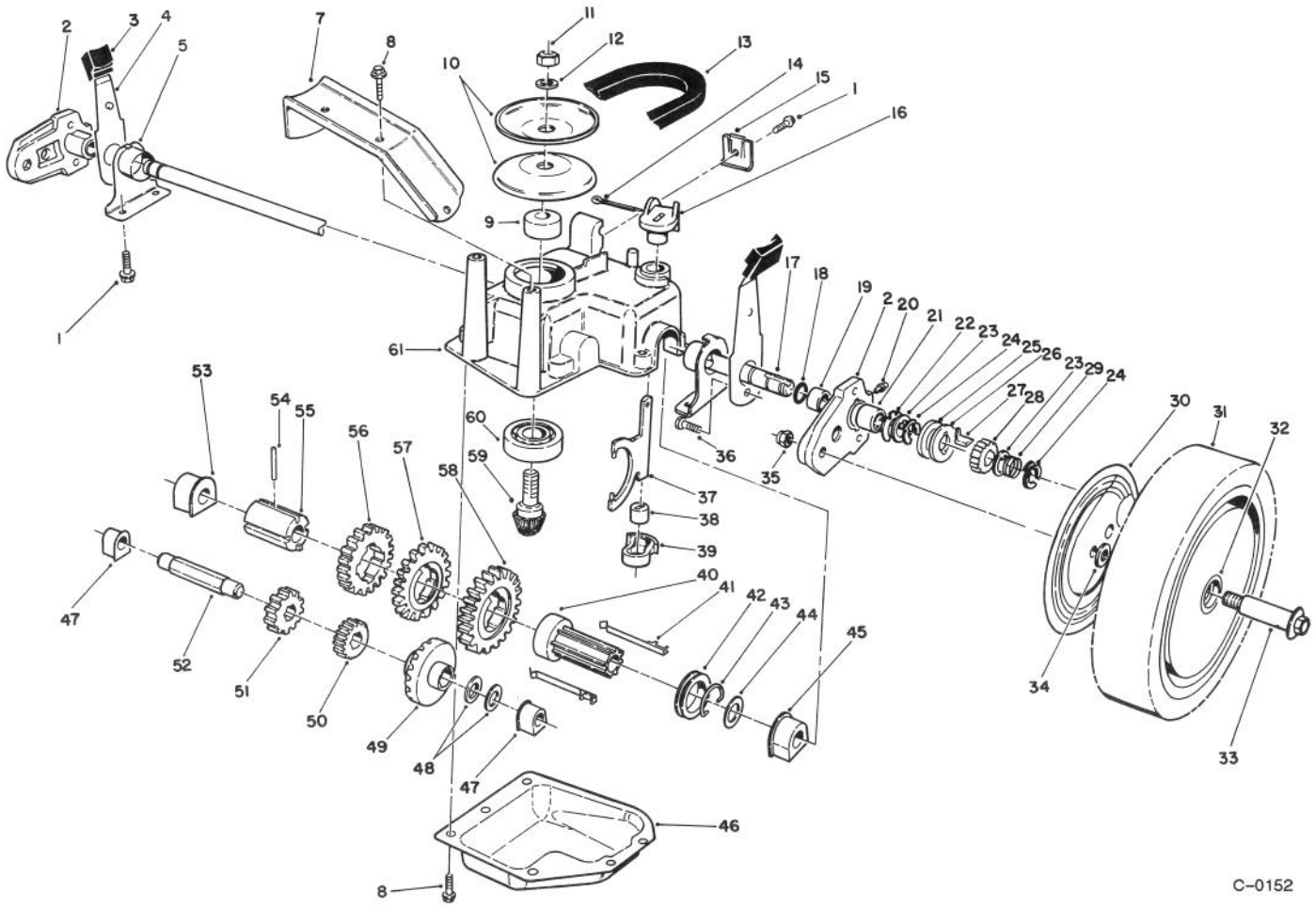

GEAR CASE ASSEMBLY (Continued)

Ref. No.	Part No.	Description	No. Used
45	60-8770	Bushing - Output Shaft	1
46	60-8730	Cover - Gear Case	1
47	60-8750	Bushing - Intrmdt. Shaft	2
48	36-4791	Washer - Thrust	2
49	55-3760	Gear - Pinion 15T	1
50	55-3780	Gear - Pinion 20T	1
51	55-3800	Gear - Pinion 25T	1
52	60-8800	Shaft - Intermediate	1
53	60-8850	Bushing - Output Shaft	1

Ref. No.	Part No.	Description	No. Used
54	32121-120	Pin - Coil	1
55	60-8790	Sleeve - Gear	1
56	55-3810	Gear - 39T (3rd Gear)	1
57	55-3790	Gear - 44T (2nd Gear)	1
58	55-3770	Gear - 49T (1st Gear)	1
59	60-8890	Pinion - Bevel	1
60	38-7820	Bearing - Ball	1
61	60-8710	Case - Gear (Upper)	1
*	62-6672	Gear Case Assy. Complete	1

*Not Illustrated

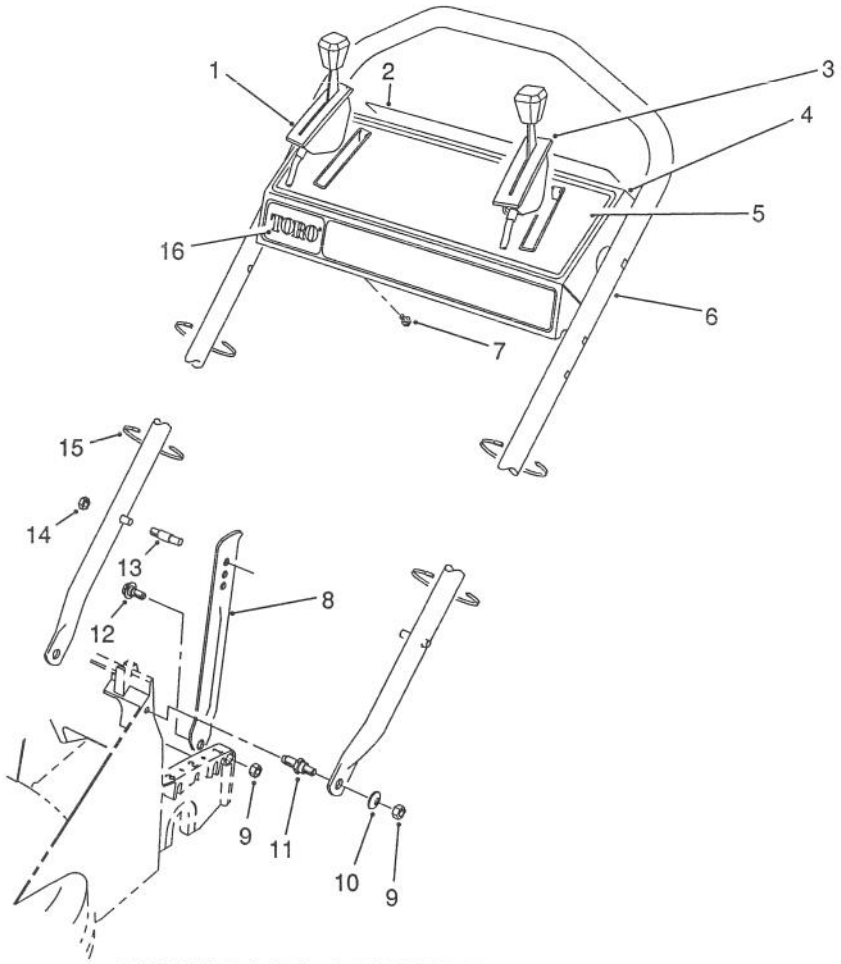

C-0173

HANDLE ASSEMBLY

Ref. No.	Part No.	Description	No. Used
1	65-5530	Control - Ground Speed Bend Type #3 Sheath Lg. 51-1/4" Wire Lg. 2-1/8"	1
2	63-9060	Decal - Danger	1
3	71-0651	Control - Throttle Bend Type #1 Sheath Lg. 54-1/2" Wire Lg. 2-3/16"	1
4	13-6579	Control Panel Assembly (Incl. Ref. #2 & 5)	1
5	66-0590	Decal - Instruction	1

Ref. No.	Part No.	Description	No. Used
6	66-0320	Handle	1
7	32104-76	Screw - Self Tapping	5
8	65-5730	Latch - Handle	2
9	3296-29	Nut - Lock	4
10	3256-23	Washer - Flat	2
11	66-0450	Screw - Shoulder Stud	2
12	66-0440	Screw - Shoulder	2
†13	49-2750	Pin - Handle	2
†14	3296-47	Nut - Lock	2
15	3290-378	Tie - Cable	4
16	66-1770	Decal - TORO	1

*Not Illustrated
†Service Replacement Parts

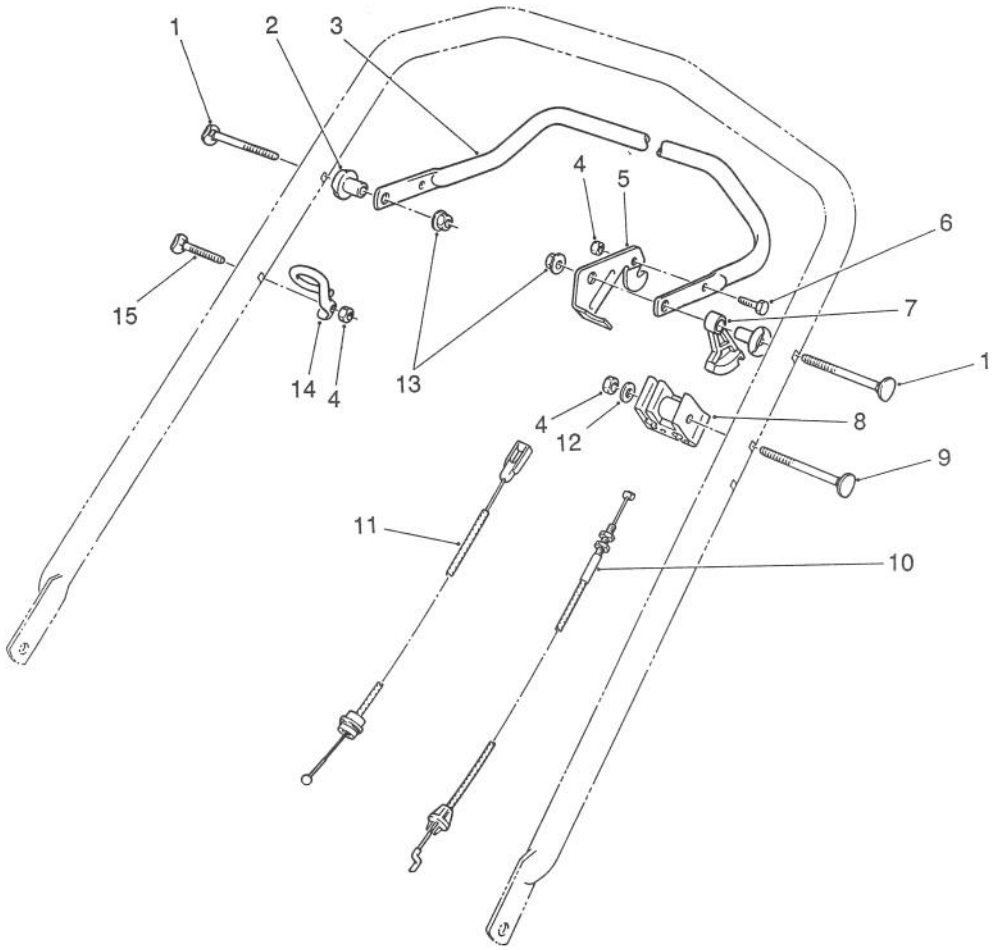

C-0312

TRACTION CONTROL ASSEMBLY

Ref. No.	Part No.	Description	No. Used
1	17-9426	Screw - Handle	2
2	66-0330	Support - Spacer	2
3	52-7430	Bar - Control	1
4	3296-42	Nut - Lock	3
5	66-5350	Lever - Control	1
6	321-3	Screw - Cap Hex. Hd.	1
7	46-5520	Lever - Traction	1
8	71-0960	Support - Cable	1

Ref. No.	Part No.	Description	No. Used
9	46-6432	Screw - Handle	1
10	71-0620	Cable - Traction	1
11	66-0720	Cable - Brake	1
12	3256-22	Washer - Flat	1
13	3296-58	Nut - Flange Lock	2
14	46-8081	Guide - Rope	1
15	46-6435	Screw - Handle	1

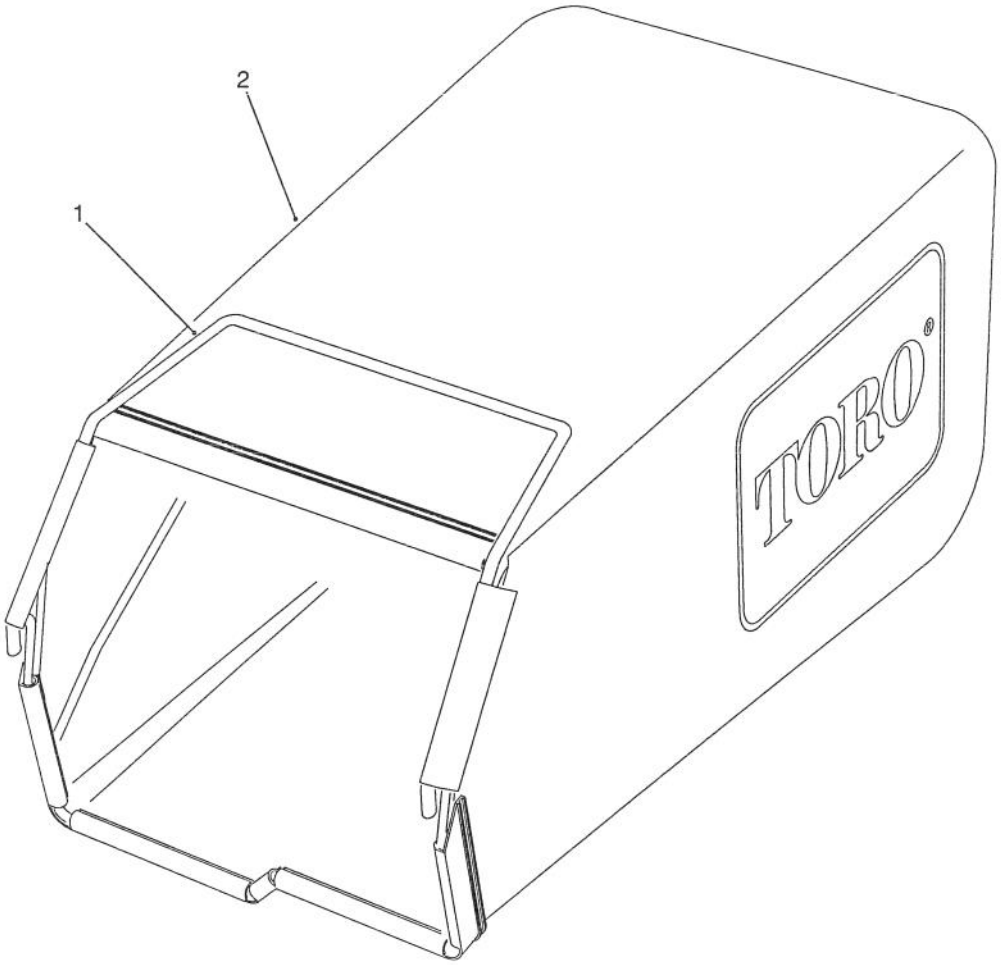

C-0168

GRASS BAG ASSEMBLY

Ref. No.	Part No.	Description	No. Used
1	71-2970	Frame - Grass Bag	1
2	66-0010	Bag	1

Ref. No.	Part No.	Description	No. Used
*	13-6349	Grass Bag Assembly (Incl. Ref. #1 & 2)	1

*Not Illustrated

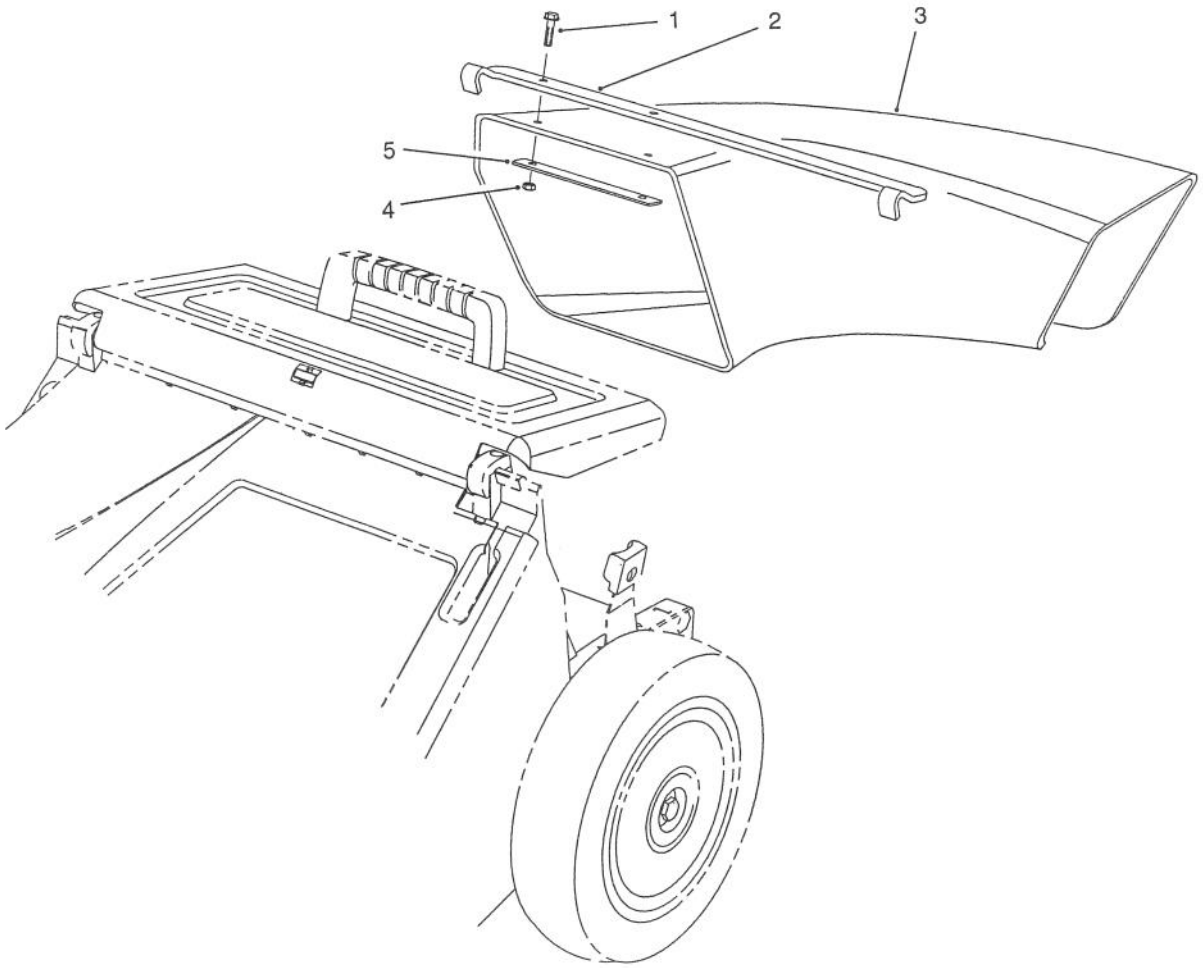

C-0169

SIDE DISCHARGE CHUTE MODEL NO. 59112 (Optional)

Ref. No.	Part No.	Description	No. Used
1	3290-126	Screw - Hex. Washer Hd.	2
2	66-0070	Bracket - Chute Hanger	1
3	65-5240	Chute - Discharge	1

Ref. No.	Part No.	Description	No. Used
4	3296-12	Nut - Lock	2
5	66-0060	Plate - Stress	1

ENGINE TECUMSEH MODEL NO. TVS840-8014B

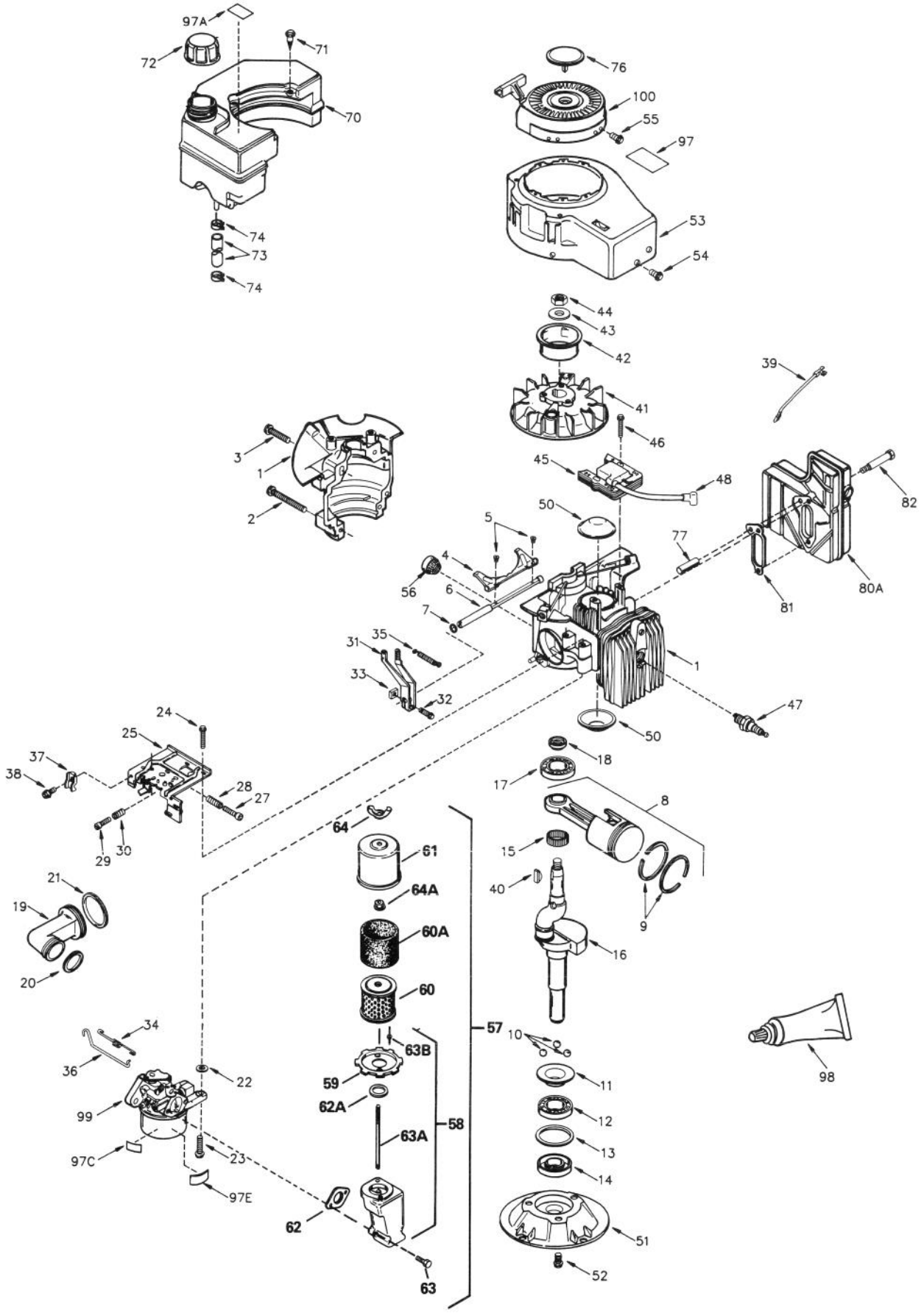

ENGINE TECUMSEH MODEL NO. TVS840-8014B

Ref. No.	Part No.	Description	No. Used
1	250294	Cylinder Assembly (Incl. Ref. # 2, 3, 50 & 56A)	1
2	650891	Screw – Hex. Hd.	2
3	650892	Screw – Hex. Hd.	2
4	490304	Lever – Governor	1
5	650506	Screw – Pan Hd.	2
6	490305	Shaft – Governor	1
7	510337	Seal – Oil	1
8	310279A	Piston & Rod Assembly (Incl. Ref. #9 & 15)	1
9	310239	Ring Set – Piston	1
10	570673	Ball	3
11	510338	Ring – Slide	1
12	530158	Bearing – Ball	1
13	530159	Retainer – Bearing	1
14	510339	Seal – Oil	1
15	530164	Bearing – Strip	1
16	290601	Crankshaft	1
17	530161	Bearing – Ball	1
18	510340	Seal – Oil	1
19	570674	Intake Pipe Assembly (Incl. Ref. #20 & 21)	1
20	510341	Seal – O-Ring	1
21	510342	Seal – O-Ring	1
22	27110	Gasket	2
23	792067	Screw – Hex. Washer Hd.	2
24	650735	Screw – Hex. Hd.	3
25	570675	Control Bracket Assembly (Incl. Ref. #27-30)	1
27	650606	Screw – Phillips Hd.	1
28	32924	Spring	1
29	650549	Screw – Filester Hd.	1
30	31342	Spring	1
31	490306	Lever – Governor	1
32	29826	Screw – Hex. Hd.	1
33	29216	Nut – Hex.	1
34	490307	Spring – Throttle Link	1
35	490308	Spring – Governor	1
36	490309	Link – Governor	1
37	27793	Clip – Conduit	1
38	650837	Screw – Hex. Hd.	1
39	611148	Wire – Ground	1
40	611107	Key – Flywheel	1
41	611149	Flywheel	1
42	34449	Cup – Starter	1
43	650815	Washer – Belleville	1
44	650816	Nut – Flywheel	1
45	34443A	Solid State Assembly	1
46	650814	Screw – Hex. Hd.	2
47	611049	Spark Plug (Champion RCJ-8Y or equivalent)	1
48	610118	Cover – Spark Plug	1
50	570683	Cover – Port	2
51	330180	Adapter	1
52	792067	Screw – Hex. Washer Hd.	3
53	350430	Housing – Blower	1
54	650894	Screw – Hex. Washer Hd.	4
55	650884	Screw – Hex. Washer Hd.	4
56	430233	Filter – Fuel	1
57	730575	Air Cleaner Kit (Incl. Ref. #58, 60, 60A, 61, 62, 63, 64 & 97B)	1
58	450249	Air Cleaner Elbow Assy. (Incl. Ref. #59, 62A, 63A & 63B)	1
59	34699	Bracket – Air Cleaner	1
60	34782	Filter – Air Cleaner (Incl. Ref. #64A)	1
60A	34783	Filter – Pre-Air	1
61	34781	Cover – Air Cleaner	1
62	27272A	Gasket – Air Cleaner (Cleaner-Carburetor)	1
62A	34698A	Gasket – Air Cleaner (Cleaner-Bracket)	1
63	650163	Screw – Filester Hd.	2
63A	650901	Stud	1
†63B		Rivet – Pop	2
64	650513	Nut – Wing	1
64A	650825	Nut & Lockwasher	1
70	410258	Fuel Tank Assembly	1
71	650895	Screw – Hex. Hd.	3
72	410259	Cap – Fuel	1
73	29774	Line – Fuel	1
74	26460	Clamp – Fuel Line	2
76	35392	Plug – Starter	1
77	390315	Pin	1
80A	390316	Muffler	1
81	51343A	Gasket – Muffler	1
82	650893	Screw – Hex. Hd.	2
97	34686	Decal – Name	1
97A	550230	Decal – Fuel Mixture	1
97C	34144	Decal – Primer	1
97E	550234	Decal – Instruction	1
98	510334	Gasket Eliminator	1
99	632434	Carburetor Assembly (Incl. Ref. #20)	1
100	590621	Rewind Starter Assembly	1

*Not Illustrated
†Obtain Locally

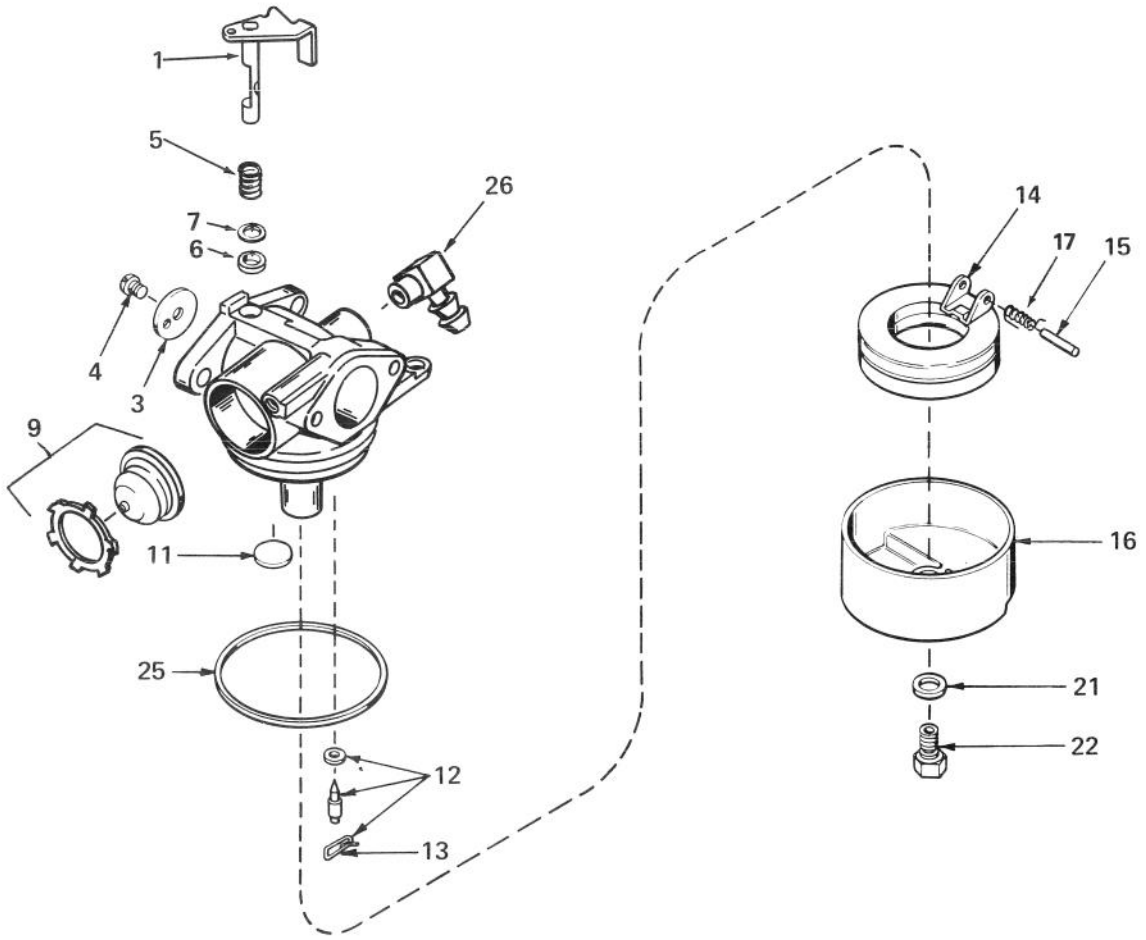

CARBURETOR TECUMSEH NO. 632434

Ref. No.	Part No.	Description	No. Used
1	632432	Throttle Shaft & Lever Assy.	1
3	631757	Shutter – Throttle	1
4	650506	Screw – Throttle Shutter	1
5	632169	Spring – Throttle	1
6	631183	Washer – Dust Seal	1
7	631184	Washer – Flat	1
9	632433	Bulb & Retainer – Primer	1
11	631027	Plug – Welch	1
12	631021	Needle Seat & Clip Assy. (Incl. Ref. #13)	1

Ref. No.	Part No.	Description	No. Used
13	631022	Clip – Needle	1
14	632019	Float – Carburetor	1
15	631024	Shaft – Float	1
16	631867	Bowl – Float	1
17	632386	Spring – Float Shaft	1
21	27110	Washer – Fiber	1
22	632435	Nut – Float Bowl	1
25	631028	Gasket – Float Bowl	1
26	631807	Fitting – Fuel Inlet	1

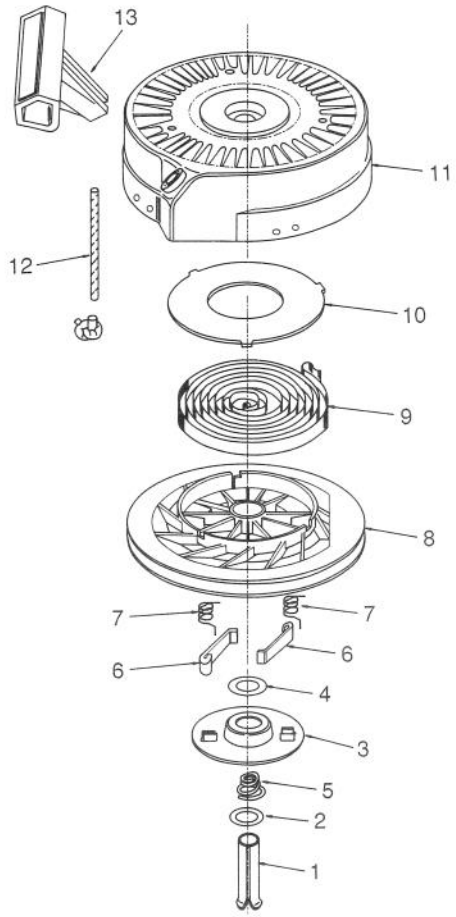

REWIND STARTER TECUMSEH NO. 590621

Ref. No.	Part No.	Description	No. Used
1	590599A	Pin – Spring	1
2	590600	Washer	1
3	590615	Retainer	1
4	590601	Washer	1
5	590598	Spring – Brake	1
6	590616	Dog – Starter	2
7	590617	Spring – Dog	2

Ref. No.	Part No.	Description	No. Used
8	590618	Pulley	1
9	590619	Spring – Rewind	1
10	590620	Cover – Spring	1
11	590622	Housing – Starter	1
12	590535	Rope – Starter 62"	1
13	590452	Handle – Starter	1

PRODUCT CHANGES

In an effort to make improvements available to TORO owners as quickly as possible, minor changes are incorporated into Toro's products from time to time that do not become immediately shown in the Parts Cataiog. if such a change has been made in your unit, which is not reflected in your manual, see your TORO Distributor or his Authorized TORO Service Dealer for information and part numbers.

IDENTIFICATION AND ORDERING

MODEL AND SERIAL NUMBERS

The Lawnmower has two identification numbers; a model number and a serial number. The two numbers are stamped on a decal which is located on the rear of the housing. In any correspondence concerning the lawnmower, supply model and serial numbers to assure that correct information and replacement parts are obtained.

To order replacement parts from an Authorized TORO Service Dealer, supply the following information:
1. Model and serial number of the lawnmower.
2. Part number, description, and the quantity of part(s) desired.

NOTE: Do not order by reference number if a parts catalog is being used; use the PART NUMBER.

COUNTRIES OTHER THAN THE UNITED STATES OR CANADA

Customers who have purchased TORO products exported from the United States or Canada should contact their Toro Distributor (Dealer) to obtain guarantee policies for your country, province or state. If for any reason you are dissatisfied with your Distributor's service or have difficulty obtaining guarantee information, contact the TORO importer. If all other remedies fail, you may contact us at The Toro Company.

MAINTENANCE RECORD

Date								

MAINTENANCE RECORD

Date								

MAINTENANCE RECORD

Date								