FORM NO. 3313-853

TORO®

MODEL NO. 20900-0000001 & UP
MODEL NO 20905-0000001 & UP

PARTS CATALOG

48cm H. P. & S. P. REAR BAGGER

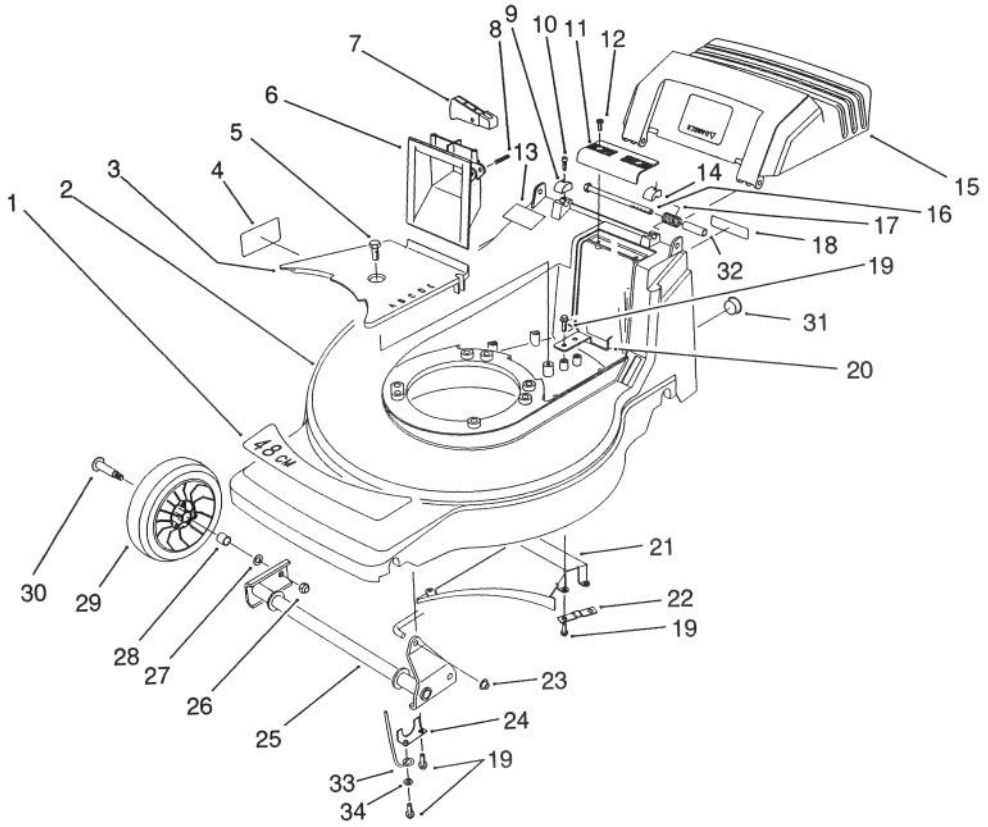

C-0361

HOUSING ASSEMBLY

Ref. No.	Part No.	Description	No. Used
1	71-8290	Decal - 48cm	1
2	14-0049	Housing - 48cm (Incl. Ref. #4, & 13)	1
3	71-7920	Cover - Belt	1
4	62-3860	Decal - Danger	1
5	32144-70	Screw - Hex. Flange Hd.	1
6	71-7870	Grip - Lower	1
7	71-7930	Trigger - H.O.C.	1
8	3284-5	Pin - Roll	1
9	71-7910	Cap - Hinge Bolt R.H.	1
10	65-5210	Screw - Thread Forming	2
11	71-7860	Grip - Upper	1
12	32144-97	Screw - Thread Forming	2
13	66-1700	Decal - Noise Rating	1
14	71-7900	Cap - Hinge Bolt L.H.	1
15	71-8240	Door - Discharge (Model No. 20905 Only)	1
*	71-8241	Door Discharge (Model No. 20900 Only)	1

Ref. No.	Part No.	Description	No. Used
16	322-29	Screw - Cap Hex. Hd.	2
17	71-8300	Spring - Door	2
18	66-0680	Decal - French Regulation	1
19	49-2040	Screw - Thread Forming	10
20	71-7890	Guide - Belt Rear (Model No. 20905 Only)	1
21	71-7990	Ramp - Discharge	1
22	71-8220	Strap - Rear Suspension (Model No. 20905 Only)	1
23	32112-11	Nut - Push	1
24	71-7760	Plate - Suspension Front	2
25	71-7820	Pivot - Front	1
26	52-3620	Nut - Lock	2
27	40-1940	Washer - Wheel	2
28	27-6250	Bushing - Wheel	4
29	46-1113	Wheel & Tire Assembly (Incl. Ref. #28)	2
30	27-6230	Bolt - Wheel	2
31	2410-74	Plug - Hole	1

* Not Illustrated

©The TORO Company - 1989

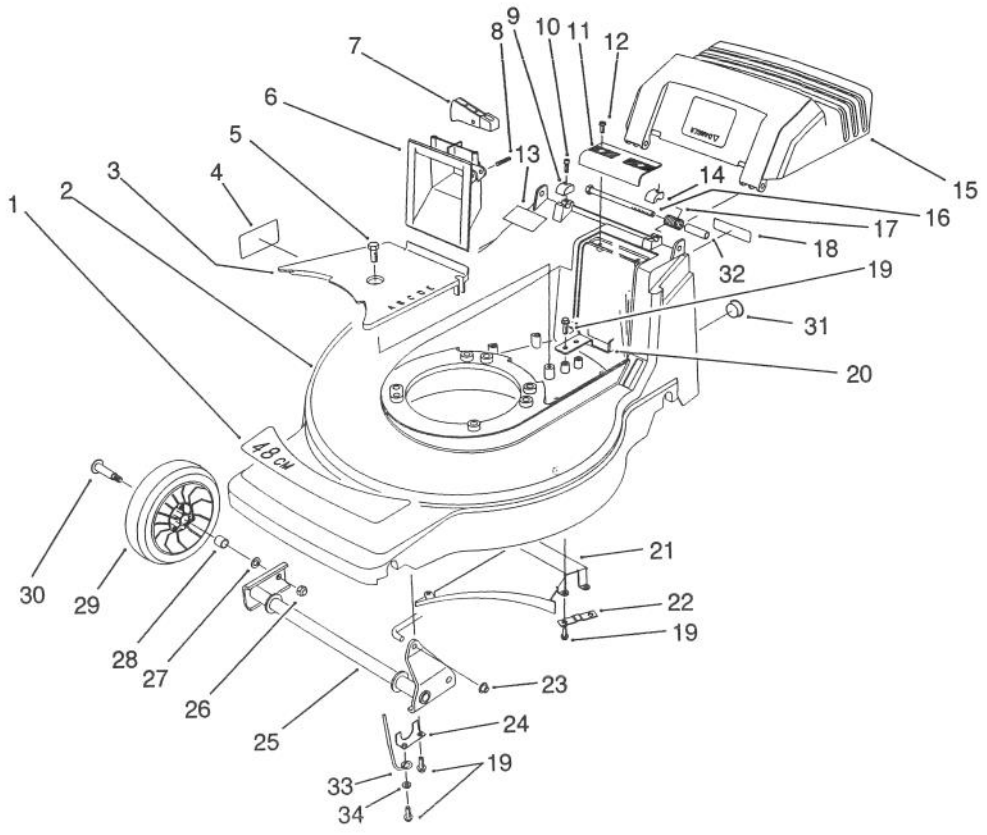

C-0361

HOUSING ASSEMBLY (CONTINUED)

Ref. No.	Part No.	Description	No. Used
32	71-8580	Spacer - Door	2
33	71-8750	Retainer - Shaft L.H.	1
*	71-8740	Retainer - Shaft R.H.	1

Ref. No.	Part No.	Description	No. Used
34	3256-22	Washer - Flat	2

*Not Illustrated

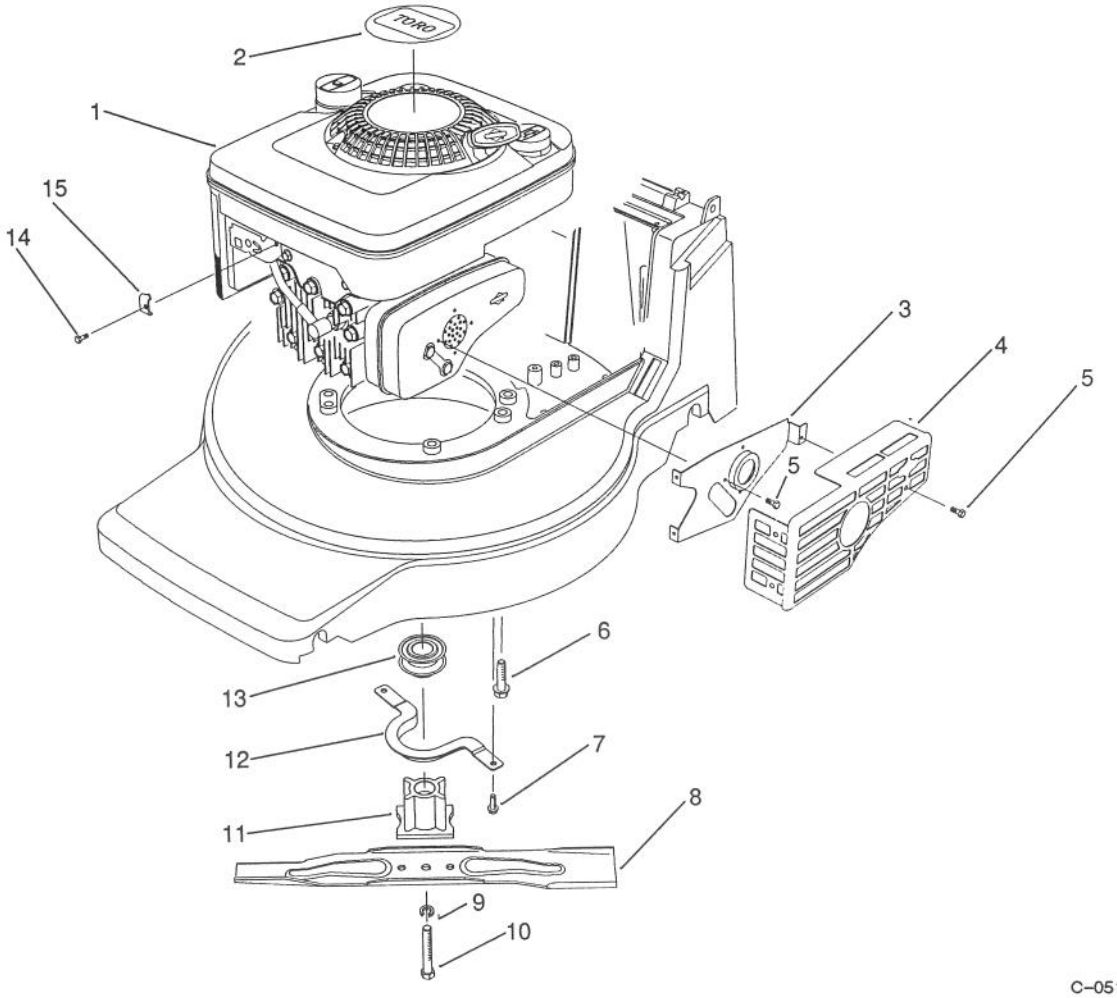

C-0514

ENGINE ASSEMBLY

Ref. No.	Part No.	Description	No. Used
1	70-7750	Engine - B&S Quantum	1
2	71-8460	Decal - Engine	1
3	2210-314	Bracket - Muffler	1
4	2210-315	Guard - Muffler	1
5	2210-173	Screw - Muffler	7
6	32144-102	Bolt - Engine	3
7	32144-4	Screw - Thread Forming (Model No. 20905 Only)	2
8	71-8210	Blade - 48cm	1

Ref. No.	Part No.	Description	No. Used
9	3253-22	Washer - Lock	1
10	26-0672	Bolt - Blade	1
11	71-7940	Retainer - Blade	1
12	71-7960	Guide - Engine Belt (Model No. 20905 Only)	1
13	62-7550	Pulley - Driver (Model No. 20905 Only)	1
14	2210-313	Screw - Clamp	1
15	2210-249	Clamp - Cable	1

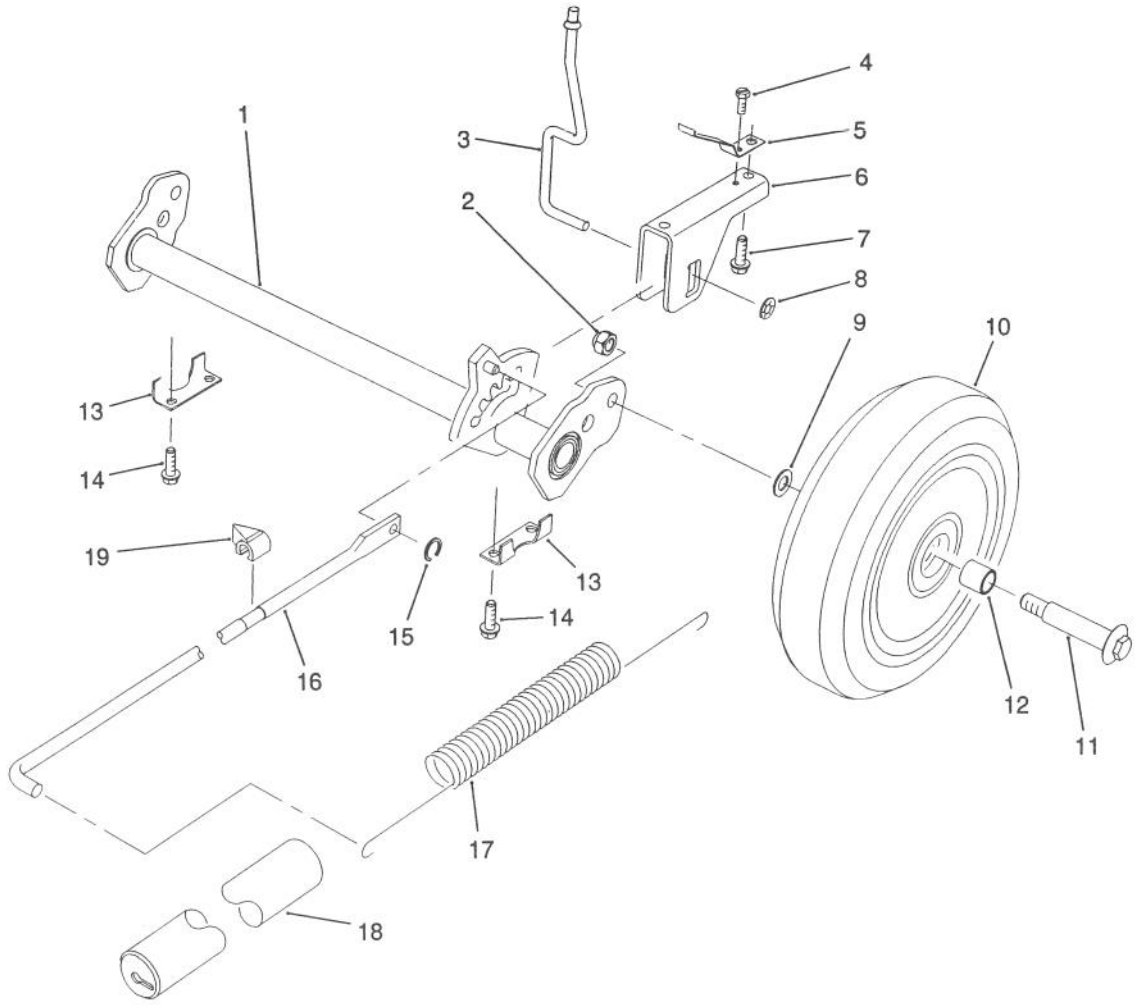

H. P. REAR AXLE ASSEMBLY (Model No. 20900 Only)

Ref. No.	Part No.	Description	No. Used
1	71-7800	Pivot - Rear H.P.	1
2	52-3620	Nut - Lock	2
3	71-7840	Rod - Trigger	1
4	32144-31	Screw - Thread Forming	1
5	71-8060	Spring - Trigger Return	2
6	71-8080	Saddle - H.O.C.	1
7	63-8590	Screw - Thread Forming	2
8	32112-13	Nut - Push	1
9	40-1940	Washer - Wheel	2
10	11-9509	Wheel & Tire Assembly (Incl. Ref. #12)	2

Ref. No.	Part No.	Description	No. Used
11	27-6230	Bolt - Wheel	2
12	27-6250	Bushing - Wheel	4
13	71-7770	Plate - Rear Suspension	2
14	49-2040	Screw - Thread Forming	4
15	32151-93	Ring - Grip	1
16	71-7970	Rod - Link	1
17	71-7740	Spring - Counterbalance	1
18	71-8450	Cover - Spring	1
19	71-7980	Indicator - H.O.C.	1

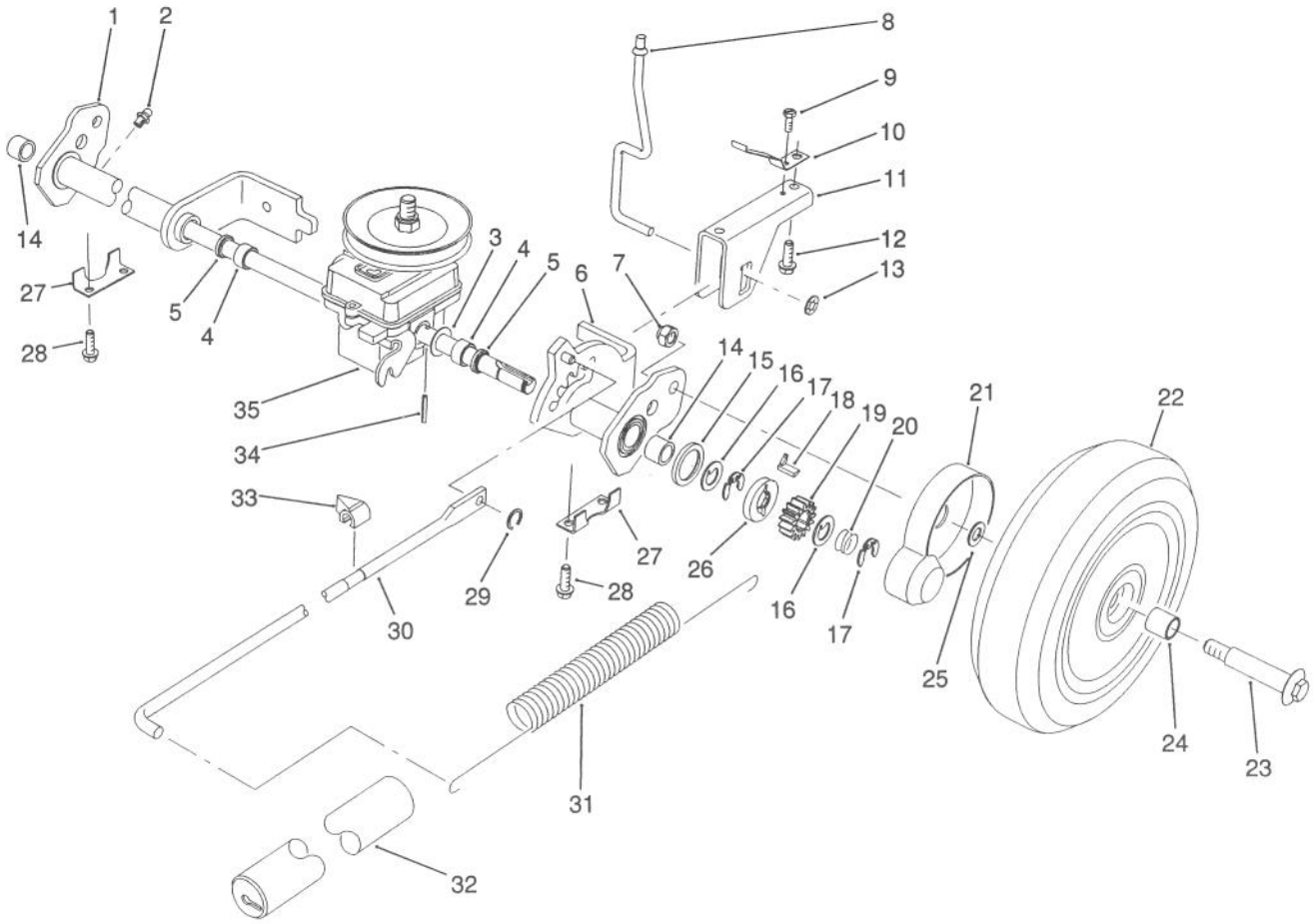

C-0364

S. P. REAR AXLE ASSEMBLY (Model No. 20905 Only)

Ref. No.	Part No.	Description	No. Used
1	71-8430	Rear Pivot Assembly R.H. (Incl. Ref. #2, 4, 5 & 14)	1
2	302-32	Fitting - Grease	2
3	36-4780	Washer	2
4	47-2890	Bushing - Sleeve	2
5	47-6730	Seal - Grease	2
6	71-8440	Rear Pivot Assembly L.H. (Incl. Ref. #2, 4, 5 & 14)	1
7	52-3620	Nut - Lock	2
8	71-7840	Rod - Trigger	1
9	32144-31	Screw - Thread Forming	1
10	71-8060	Spring - Trigger Return	2
11	71-8080	Saddle - H.O.C.	1
12	63-8590	Screw - Thread Forming	2
13	32112-13	Nut - Push	1
14	48-2060	Bearing - Needle	2
15	65-4710	Washer - Friction	2
16	65-4740	Washer - Keyed Thrust	4
17	65-2720	Ring - Retaining	4

Ref. No.	Part No.	Description	No. Used
18	66-6050	Key - Rocking L.H.	1
*	66-6040	Key - Rocking R.H.	1
19	65-4750	Gear - Pinion	2
20	65-4720	Spring - Compression	2
21	74-1660	Cover - Wheel	2
22	11-9519	Wheel, Tire & Gear Assy. (Incl. Ref. #24)	2
23	27-6230	Bolt - Wheel	2
24	27-6250	Bushing - Wheel	4
25	74-1670	Spacer - Wheel	2
26	65-4760	Washer - Clutch	2
27	71-7770	Plate - Rear Suspension	2
28	49-2040	Screw - Thread Forming	4
29	32151-93	Ring - Grip	1
30	71-7970	Rod - Link	1
31	71-7740	Spring - Counterbalance	1
32	71-8450	Cover - Spring	1
33	71-7980	Indicator - H.O.C.	1
34	32121-88	Pin - Roll	2
35	71-8250	Gearbox Assembly	1

*Not Illustrated

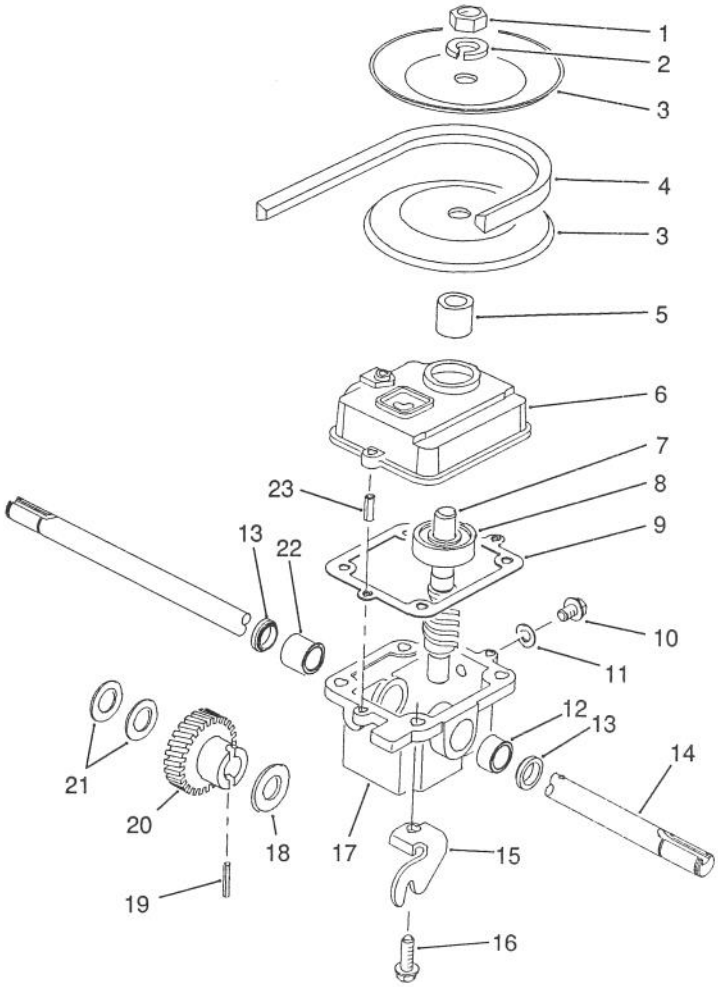

C-0365

GEARBOX ASSEMBLY NO. 71-8250 (Model No. 20905 Only)

Ref. No.	Part No.	Description	No. Used
1	3220-4	Nut - Jam	1
2	3253-6	Washer - Lock	1
3	71-7750	Pulley - Half	2
4	71-8500	Belt - V	1
5	71-7570	Spacer - Pulley	1
6	39-1103	Cover - Gearbox	1
7	71-8050	Shaft & Worm	1
8	47-7250	Bearing - Ball	1
9	36-1000	Gasket - Gearbox	1
10	28-1550	Screw - Drain	1
11	46-9640	Gasket - Drain Screw	1
12	47-2890	Bushing - Sleeve	1

Ref. No.	Part No.	Description	No. Used
13	47-6730	Seal - Oil	2
14	71-7880	Shaft - Output	1
15	71-8120	Bracket - Traction	1
16	49-2040	Screw - Thread Forming	4
17	33-2061	Case - Gearbox	1
18	3-0724	Washer - Thrust	1
19	32121-120	Pin - Roll	1
20	71-8140	Gear - Helical	1
21	36-4780	Washer - Thrust	2
22	47-2900	Bushing - Sleeve	1
23	32121-1	Pin - Roll	2

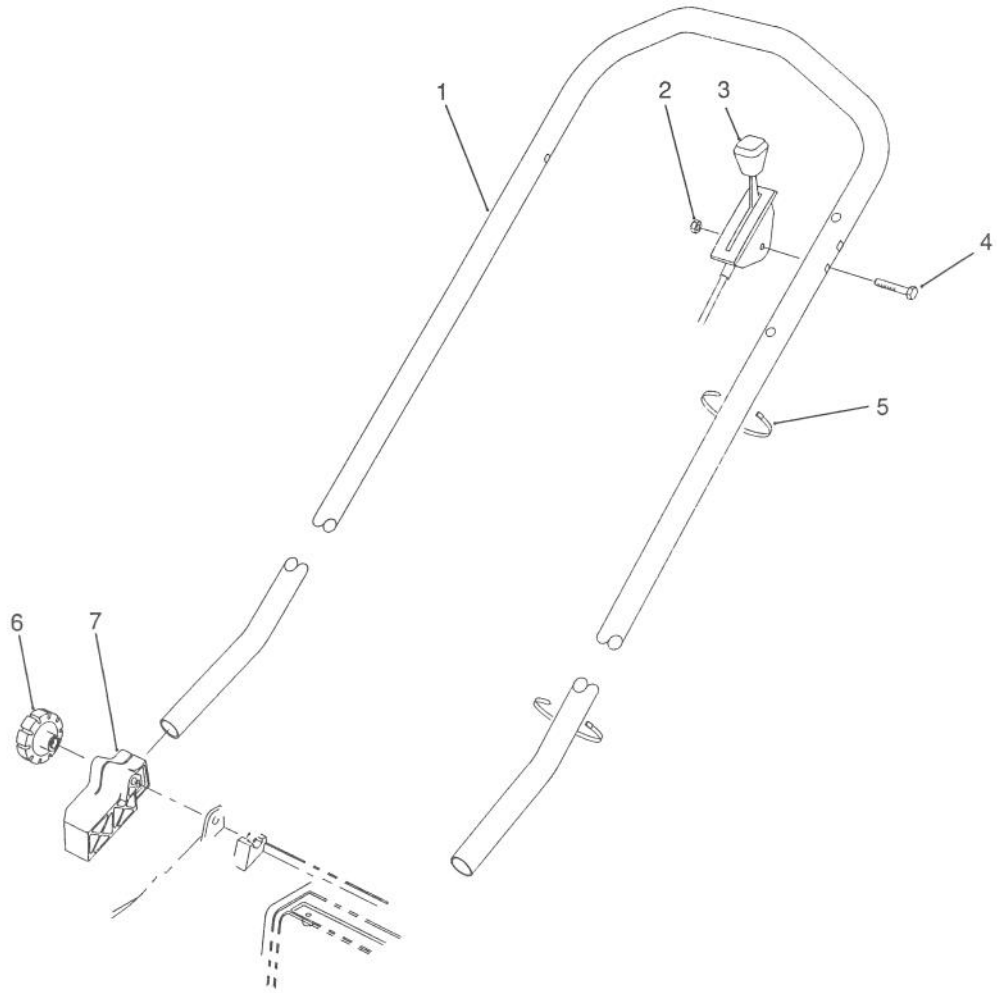

C–0366

H. P. HANDLE ASSEMBLY (Model No. 20900 Only)

Ref. No.	Part No.	Description	No. Used
1	71–8030	Handle	1
2	3296–56	Nut – Lock	1
3	71–8380	Control – Throttle Bend Type #1 Sheath Lg. 57.50 Wire Lg. 2 1/2	1
4	46–6430	Screw – Cap Hex. Hd.	1
5	3290–378	Tie – Cable	2
6	19–4050	Knob – Handle	2
7	71–8090	Mount – Handle L.H.	1
*	71–8100	Mount – Handle R.H.	1

*Not Illustrated

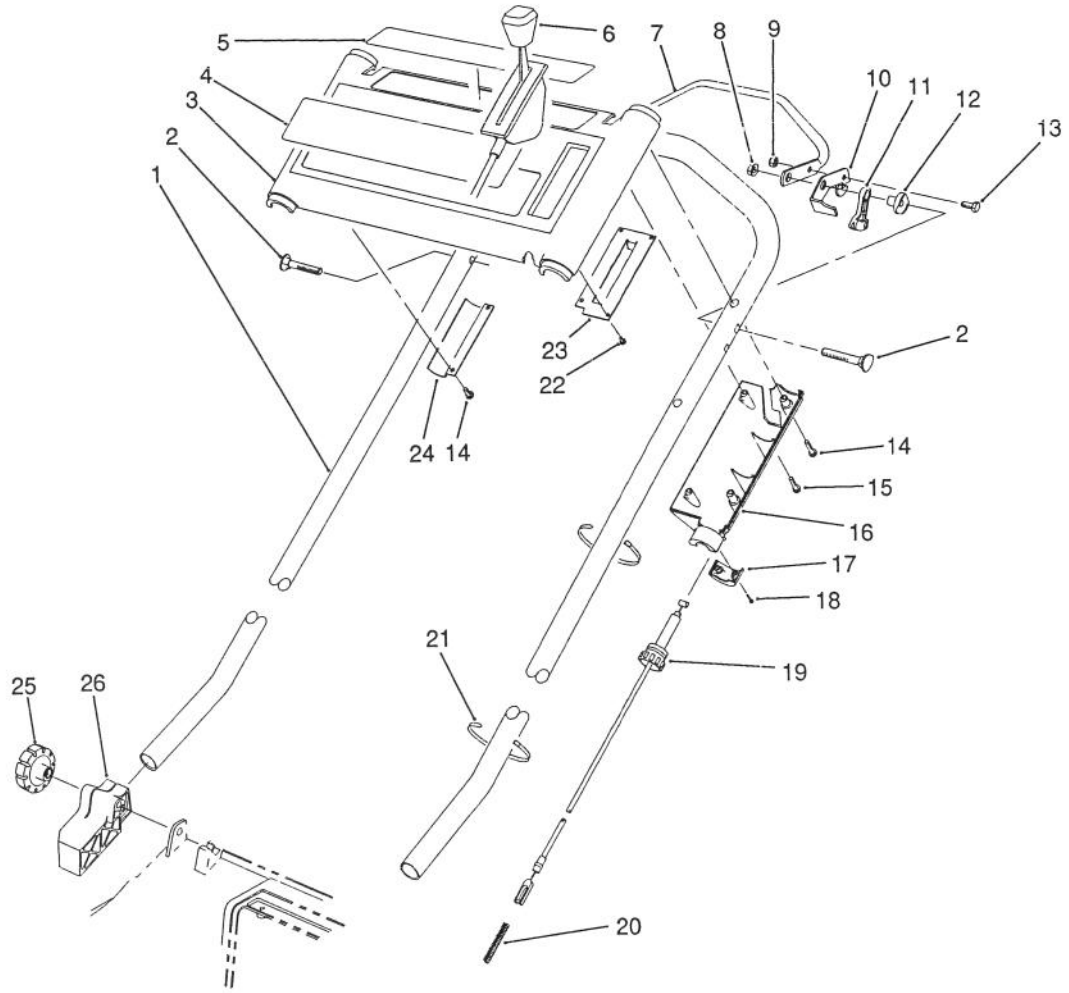

C-0367

S. P. HANDLE ASSEMBLY (Model No. 20905 Only)

Ref. No.	Part No.	Description	No. Used
1	71-8030	Handle	1
2	17-9426	Screw - Handle	2
3	14-0039	Panel - Control	1
4	71-8330	Decal - TORO Logo	1
5	71-8320	Decal - Danger	1
6	49-4186	Control - Throttle Bend Type #1 Sheath Lg. 55.50 Wire Lg. 2 1/2	1
7	46-9900	Bar - Control	1
8	3296-29	Nut - Flange Lock	2
9	3296-42	Nut - Lock	1
10	46-8800	Lever - Control	1
11	46-5520	Lever - Traction	1
12	66-0330	Support - Spacer	2

Ref. No.	Part No.	Description	No. Used
13	321-3	Screw - Cap Hex. Hd.	1
14	32144-97	Screw - Thread Forming	5
15	32104-121	Screw - Thread Forming	1
16	71-7680	Cover - Throttle Lower	1
17	71-7630	Cap - Throttle Lower	1
18	32144-99	Screw - Thread Forming	2
19	71-8110	Cable - Traction	1
20	71-8310	Spring - Gearbox Return	1
21	3290-378	Tie - Cable	2
22	32144-98	Screw - Thread Forming	4
23	71-8040	Plate - Throttle	1
24	71-8130	Bracket - Panel	1
25	19-4050	Knob - Handle	2
26	71-8100	Mount - Handle R.H.	1
*	71-8090	Mount - Handle L.H.	1

*Not Illustrated

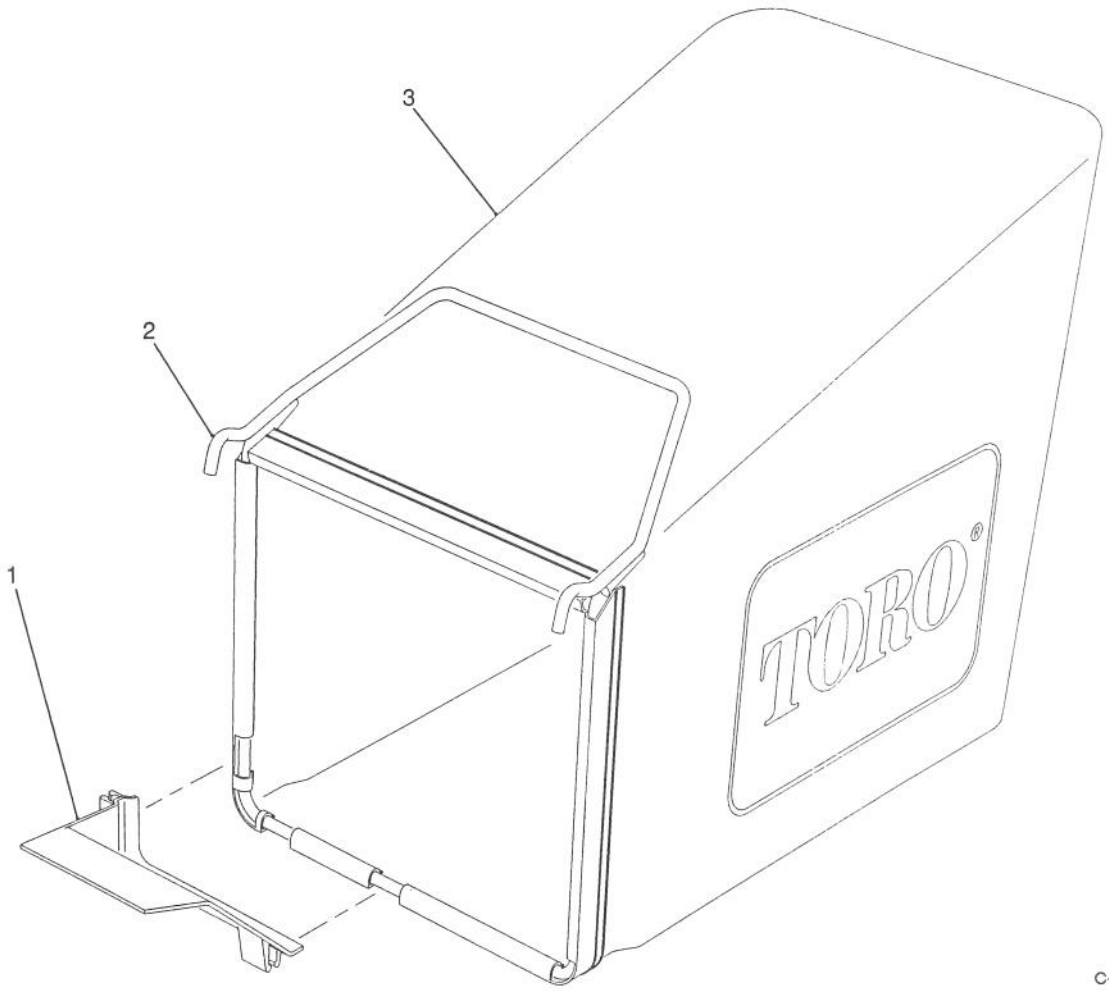

C–0368

GRASS BAG ASSEMBLY

Ref. No.	Part No.	Description	No. Used
1	71–3750	Ramp – Grass Bag	1
2	71–8180	Frame – Grass Bag	1

Ref. No.	Part No.	Description	No. Used
3	71–8270	Bag – Grass	1

ENGINE BRIGGS & STRATTON MODEL NO. 122702-0142-01

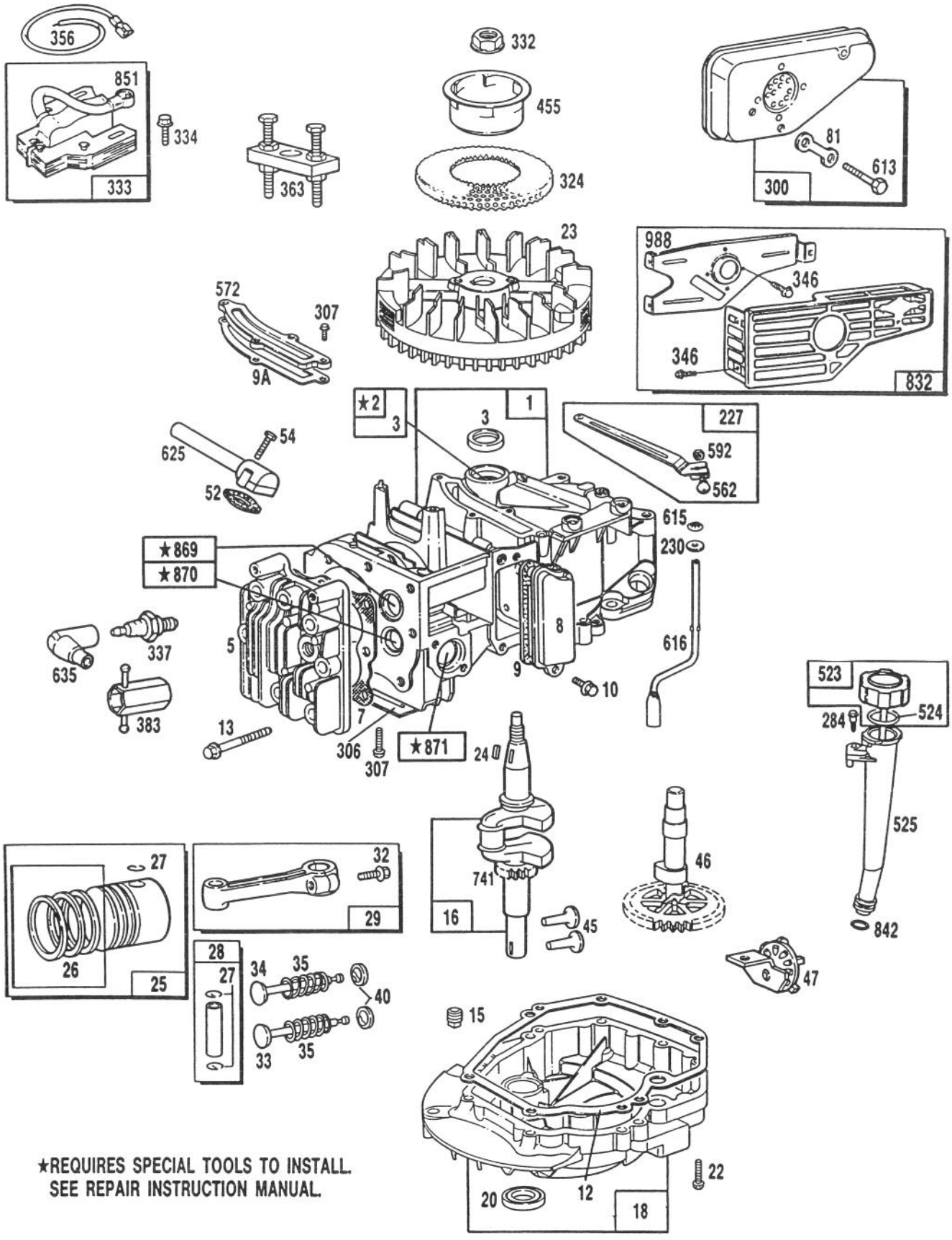

★REQUIRES SPECIAL TOOLS TO INSTALL.
SEE REPAIR INSTRUCTION MANUAL.

ENGINE BRIGGS & STRATTON MODEL NO. 122702-0142-01

Ref. No.	Part No.	Description	No. Used
1	493260	Cylinder Assembly	1
2	293708	Bushing — Cylinder	1
		Note: Requires special tools for installation.	
3	**393862	Seal — Oil	1
5	213610	Head — Cylinder	1
7	**272200	Gasket — Cylinder Hd.	1
8	399717	Breather — Valve Chamber	1
9	**271904	Gasket — Valve Cover	1
9A	**272238	Gasket — Baffle Plate	1
10	94222	Screw — Breather Mounting Sem	1
12	**272198	Gasket — Crankcase	1
13	94547	Screw — Cylinder Hd.	1
15	94239	Plug — Oil Drain	1
16	492429	Crankshaft	1
		Note: Order 94288 For Timing Gear Key	
18	493279	Sump — Engine	1
20	**399781	Seal — Oil	1
22	94220	Screw — Sump Mtg. Sem	1
23	492177	Flywheel — Magneto	1
24	222698	Key — Flywheel	1
25	493262	Piston Assy. — Standard	1
	493385	Piston Assy. — .010" O.S.	1
	493386	Piston Assy. — .020" O.S.	1
	493387	Piston Assy. — .030" O.S.	1
		Ring Sets:	
		Note: For Chrome Piston Ring Set - Standard Size - Order Part No. 493391	
26	493261	Ring Set — Std. Piston	1
	493388	Ring Set — .010" O.S. Piston	1
	493389	Ring Set — .020" O.S. Piston	1
	493390	Ring Set — .030" O.S. Piston	1
27	26026	Lock — Piston Pin	
28	298909	Pin Assy. — Piston, Standard	1
	298908	Pin Assy. — Piston, .005" O.S.	1
29	490566	Rod Assembly — Connecting	1
		Note: For Connecting Rod with .020" undersize Crankpin Bearing — Order No. 490743	
32	94405	Screw — Connecting Rod	1
33	262651	Valve — Exhaust	1
34	262652	Valve — Intake	1
35	262224	Spring — Valve	1
40	93312	Retainer — Valve Spring	1
		Used with valves with groove in stem.	
45	262204	Tappet — Valve	1

Ref. No.	Part No.	Description	No. Used
46	492828	Gear — Cam	1
47	492524	Oil Slinger Gear and Bracket	1
52	**272199	Gasket — Intake Elbow	1
54	94526	Screw — Intake Elbow Mtg.	1
81	223664	Lock — Muffler Screw	1
227	492349	Lever Assembly — Governor	1
230	67072	Washer — Governor Crank	1
284	94511	Screw — Hex Head	
300	490547	Muffler — Exhaust	
306	224324	Shield — Cylinder	1
307	94515	Screw — Hex Head	1
324	224251	Screen — Rotating	1
332	92284	Nut — Flywheel	1
333	802574	Armature — Magneto	1
334	93381	Screw — Armature Mounting Sem	1
337	293918	Plug — Spark (With Gasket) (1-1/2" High — 37-42 M.M.) (Resistor Type)	1
346	93705	Screw — Hex Head	1
356	398808	Wire — Ground	1
363	19069	Puller — Flywheel (Optional Accessory)	1
383	89838	Wrench — Spark Plug	1
455	224250	Cup — Starter	1
523	492350	Cap with Dipstick — Oil Filler	1
524	280967	Seal — Filler Tube	1
525	280929	Tube — Oil Filler	1
562	92613	Bolt — Governor Lever	1
572	224328	Baffle — Cylinder	1
592	231082	Nut — Hex	1
613	94231	Screw — Muffler Mtg.	1
615	94474	Pushnut (Governor Crank)	1
616	262578	Crank — Governor	1
625	492717	Tube — Fuel Intake	1
635	66538	Elbow — Spark Plug	1
741	262598	Gear — Timing	1
832	490777	Guard — Muffler	1
842	280966	Seal — O-Ring	1
851	221798	Terminal — Ignition Cable	1
869	213512	Seat — Intake Valve (Standard)	1
870	213513	Seat — Exhaust Valve (Standard)	1
871	262001	Guide — Exhaust Valve	1
		Note: 63709 Guide — Intake Valve See Repair Instruction Manual	
988	223828	Bracket — Muffler Guard	1

** Included in Gasket Set — Part No. 493263.

ENGINE BRIGGS & STRATTON MODEL NO. 122702-0142-01

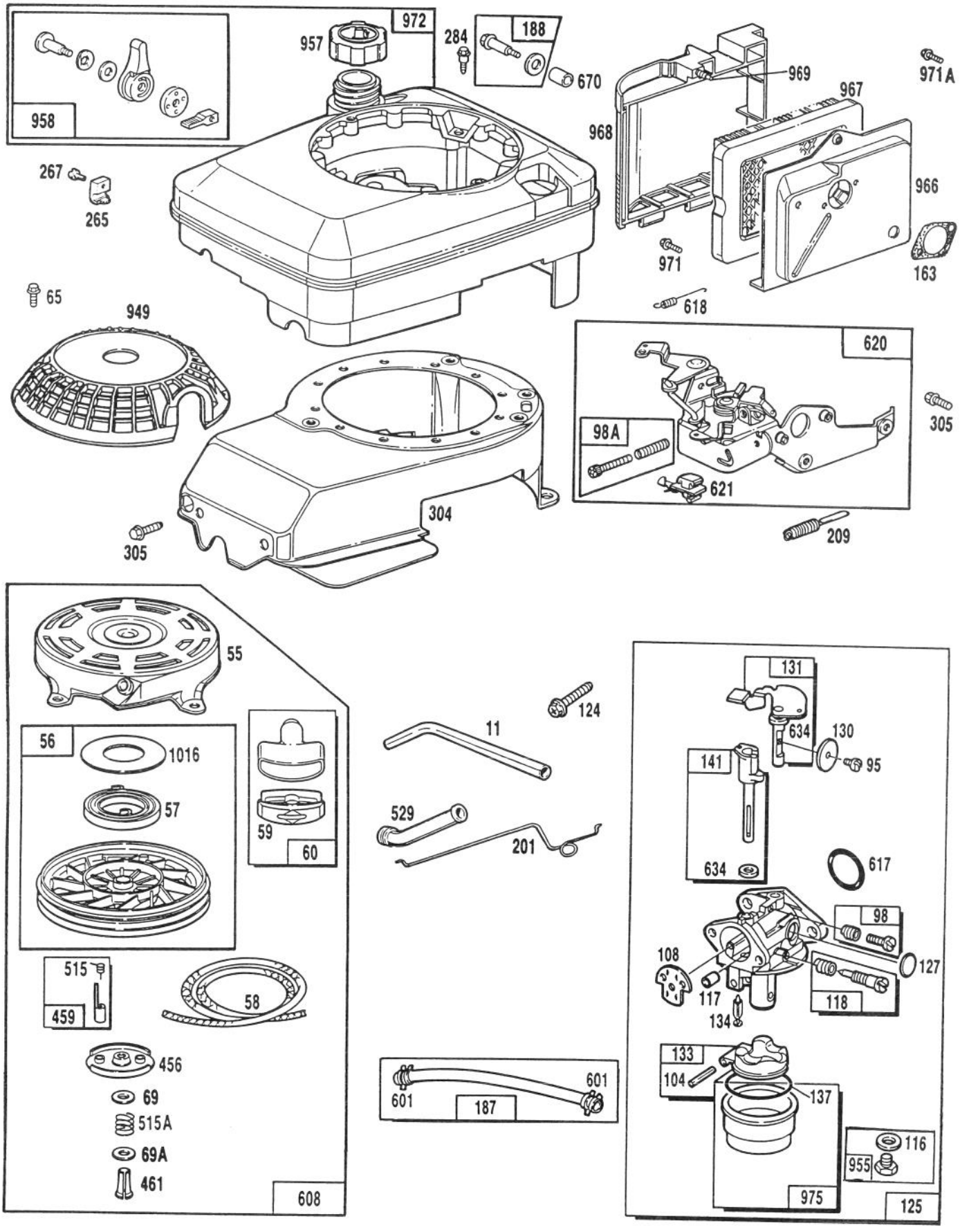

ENGINE BRIGGS & STRATTON MODEL NO. 122702-0142-01

Ref. No.	Part No.	Description	No. Used
11	231685	Tube — Breather	1
55	492831	Housing — Rewind Starter	1
56	492832	Pulley — Rewind Starter	1
57	262594	Spring — Rewind Starter	1
58	280399	Rope — Rewind Starter (Cut To 88-5/8")	1
59	396892	Insert — Handle	1
60	393152	Handle — Rewind Starter	1
65	94058	Screw — Guard Mounting	1
69	280973	Washer — Rewind Starter	1
69A	224322	Washer — Rewind Starter	1
95	94098	Screw — Throttle Valve Mounting Sem	1
98	398185	Screw — Idle Adjustment	1
98A	493280	Screw Assy. — Speed Adj.	1
104	231371	Pin — Float Hinge	1
108	223471	Valve — Choke	1
116	*†	Gasket — Sealing (Sold in Kit Only)	1
117	*	Jet (Sold in Kit Only)	1
118	493765	Valve and Spring — Needle	1
124	94525	Screw — Carburetor Mtg.	1
125	493764	Carburetor Assembly	1
127	*	Plug — Welch (Sold in Kit Only)	1
130	223470	Valve — Throttle	1
131	493267	Shaft and Lever — Throttle	1
133	398187	Float Assy. — Carburetor	1
134	*398188	Valve — Inlet (Includes Seat)	1
137	*†	Gasket — Bowl (Sold in Kit Only)	1
141	493266	Shaft — Choke	1
163	**272296	Gasket — Air Cleaner	1
187	492790	Hose — Fuel (Cut To Suit)	1
188	398540	Screw — Tank Mounting (Includes Washer)	1
201	262579	Link — Governor	1
209	262661	Spring — Governor	1

Ref. No.	Part No.	Description	No. Used
265	221535	Clamp — Casing	1
267	94204	Screw — Clamp Mtg.	1
284	94511	Screw — Hex Head	1
304	493294	Housing — Blower	1
305	94513	Screw — Hex Head Sem	1
456	224321	Retainer — Rewind Starter	1
459	492833	Pawl — Starter	1
461	262626	Pin — Starter	1
515	262556	Spring — Pawl	1
515A	262625	Spring — Torsion	1
529	280943	Grommet — Breather	1
601	93053	Clamp — Hose (Green) Note: 93807 Clamp — Hose (Black)	1
608	493295	Starter Assy. — Rewind	1
617	*†270344	Seal — Fuel Intake Tube	1
618	260870	Spring — Choke Return	1
620	492978	Bracket Assembly — Carburetor Control	1
621	396847	Switch — Stop	1
634	*†	Washer — Shaft (Sold in Kit Only)	1
670	280512	Spacer — Fuel Tank	1
949	280946	Guard — Finger	1
955	493763	Screw — Bowl Mtg.	1
957	493017	Cap Assembly — Fuel	1
958	493277	Valve — Fuel Shut-Off	1
966	492363	Base — Air Cleaner	1
967	491588	Filter — Air	1
968	280937	Cover — Air Cleaner	1
969	94120	Screw — Cover Mtg.	1
971	94269	Screw — Air Cleaner	1
971A	94121	Screw — Backplate to Carburetor	1
972	492858	Tank Assembly — Fuel	1
975	493640	Bowl Assembly — Carburetor	1
1016	224278	Cover — Rewind Starter	1

* Included in Carburetor Overhaul Kit — Part No. 492495.
† Included in Carburetor Gasket Set — Part No. 490937.

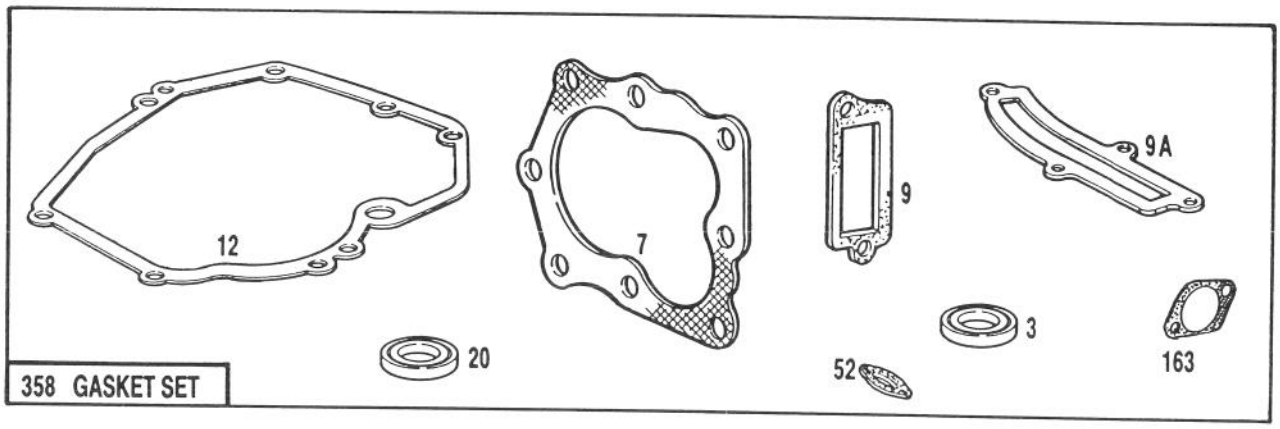

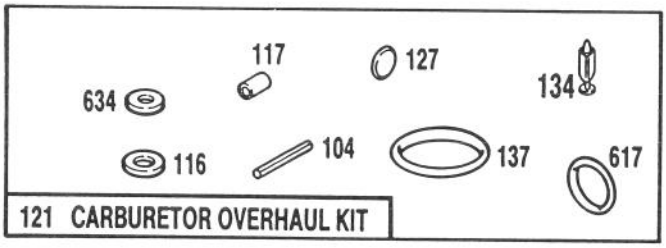

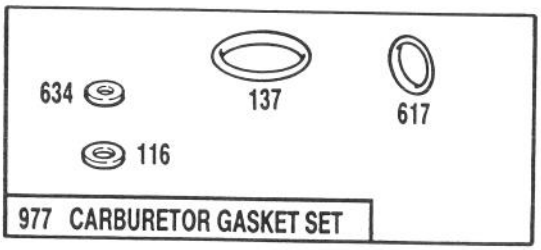

CARBURETOR KIT ASSEMBLY

Ref. No.	Part No.	Description	No. Used
3	**393862	Seal — Oil	1
7	**272200	Gasket — Cylinder Hd.	1
9	**271904	Gasket — Valve Cover	1
9A	**272238	Gasket — Baffle Plate	1
12	**272198	Gasket — Crankcase	1
20	**399781	Seal — Oil	1
52	**272199	Gasket — Intake Elbow	1
104	*231371	Pin — Float Hinge	1
116	*†	Gasket — Sealing (Sold in Kit Only)	1
117	*	Jet (Sold in Kit Only)	1
121	493762	Carburetor Overhaul Kit	1

Ref. No.	Part No.	Description	No. Used
127	*	Plug — Welch (Sold in Kit Only)	1
134	*398188	Valve — Inlet (Includes Seat)	1
137	*†	Gasket — Bowl (Sold in Kit Only)	1
163	**272296	Gasket — Air Cleaner	1
358	493263	Gasket Set	1
617	*†270344	Seal — Fuel Intake Tube	1
634	*†	Washer — Shaft (Sold in Kit Only)	1
977	490937	Gasket Set — Carburetor	1

* Included in Carburetor Overhaul Kit — Part No. 492495.
† Included in Carburetor Gasket Set — Part No. 490937.
** Included in Gasket Set — Part No. 493263.

PRODUCT CHANGES

In an effort to make improvements available to TORO owners as quickly as possible, minor changes are incorporated into Toro's products from time to time that do not become immediately shown in the Parts Catalog. If such a change has been made in your unit, which is not reflected in your manual, see your TORO Distributor or his Authorized TORO Service Dealer for information and part numbers.

IDENTIFICATION AND ORDERING

MODEL AND SERIAL NUMBERS

The Lawnmower has two identification numbers; a model number and a serial number. The two numbers are stamped on a decal which is located on the rear of the housing. In any correspondence concerning the lawnmower, supply model and serial numbers to assure that correct information and replacement parts are obtained.

To order replacement parts from an Authorized TORO Service Dealer, supply the following information:

1. Model and serial number of the lawnmower.
2. Part number, description, and the quantity of part(s) desired.

NOTE: Do not order by reference number if a parts catalog is being used; use the PART NUMBER.

COUNTRIES OTHER THAN THE UNITED STATES OR CANADA

Customers who have purchased TORO products exported from the United States or Canada should contact their Toro Distributor (Dealer) to obtain guarantee policies for your country, province or state. If for any reason you are dissatisfied with your Distributor's service or have difficulty obtaining guarantee information, contact the TORO importer. If all other remedies fail, you may contact us at The Toro Company.

MAINTENANCE RECORD

Date								

Compliance with Radio Interference Regulations Certified.
Certifie Conforme au Reglement sur le Brouillage Radioelectrique.

MAINTENANCE RECORD

DATE								