FORM NO. 3313-871

TORO®

MODEL NO. 20574-9000001 & UP

PARTS CATALOG

18" H.P. REAR BAGGER KEY-LECTRIC

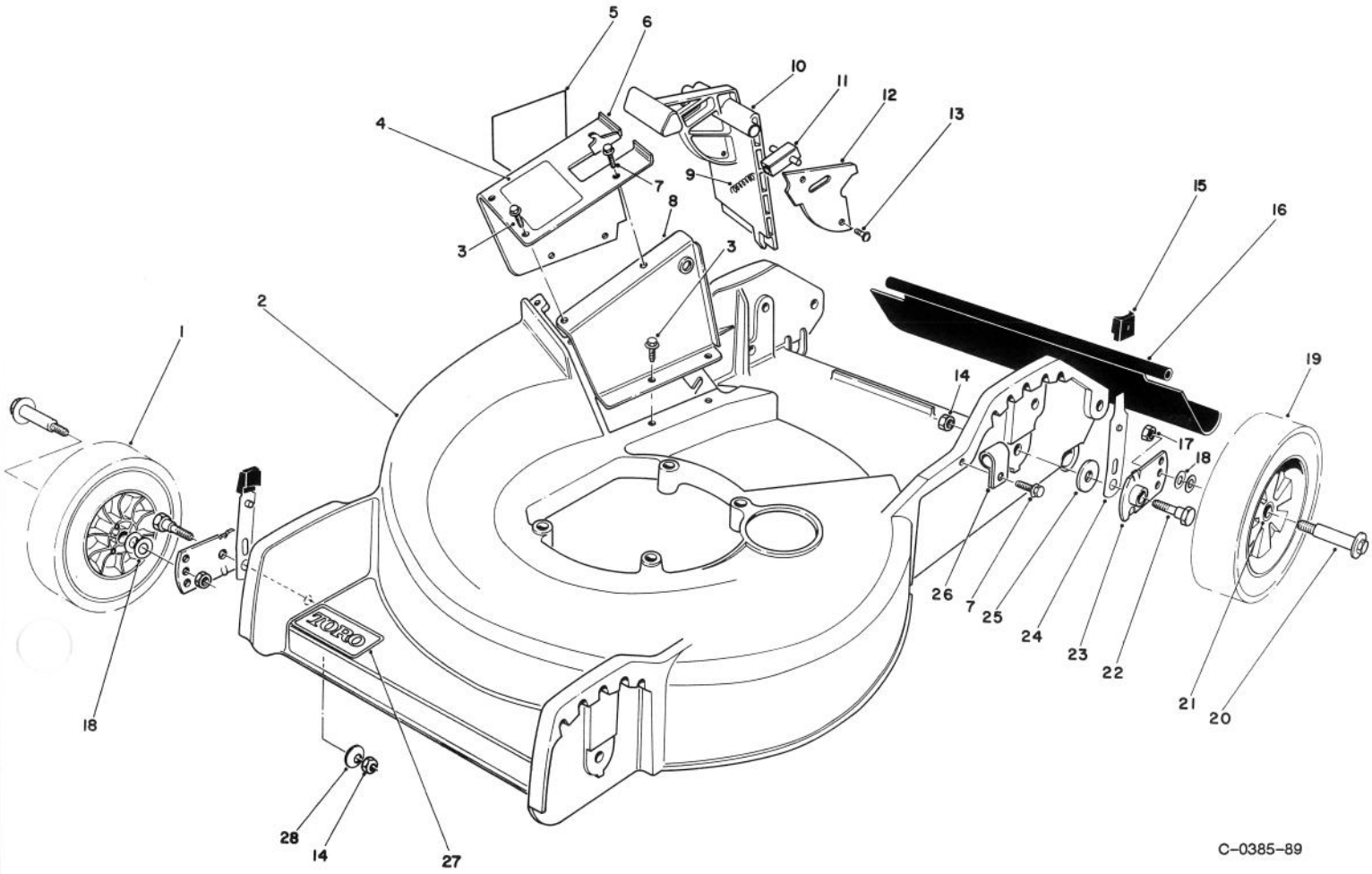

C-0385-89

HOUSING ASSEMBLY

Ref. No.	Part No.	Description	No. Used
1	27-6210	Wheel & Tire Assembly (Incl. Ref. # 21)	2
2	11-9479	Housing	1
3	12-3270	Screw - Thread Forming	6
4	71-3410	Decal - Door	1
5	39-5770	Decal - Danger	1
6	11-6839	Tunnel - Outer (Incl. Ref. # 4 & 5)	1
7	12-5450	Screw - Thread Forming	2
8	49-8030	Tunnel - Inner	1
9	33-0450	Spring - Latch	1
10	33-0411	Door - Mulching	1
11	47-5550	Latch - Door	1
12	33-0441	Cover - Door	1
13	32144-32	Screw - Self Tapping	2
14	3296-29	Locknut	4
15	25-7740	Knob - Arm	4

Ref. No.	Part No.	Description	No. Used
16	33-2380	Shield - Rear Safety	1
17	52-3620	Locknut	4
18	40-1940	Washer - Wheel Bolt	8
19	27-6200	Wheel & Tire Assembly (Incl. Ref. # 21)	2
20	27-6230	Bolt - Wheel	4
21	27-6250	Bushing - Wheel	8
22	3-0655	Screw - Pivot	4
23	33-0400	Arm - Pivot	4
24	25-8000	Arm - Spring	4
25	33-0390	Washer - Pivot	4
26	2412-52	Clamp - Conduit	1
27	71-0600	Decal - Toro	1
28	3290-456	Washer - Belleville	2
*		Loose Parts	1

* Not Illustrated

© The TORO Company - 1989

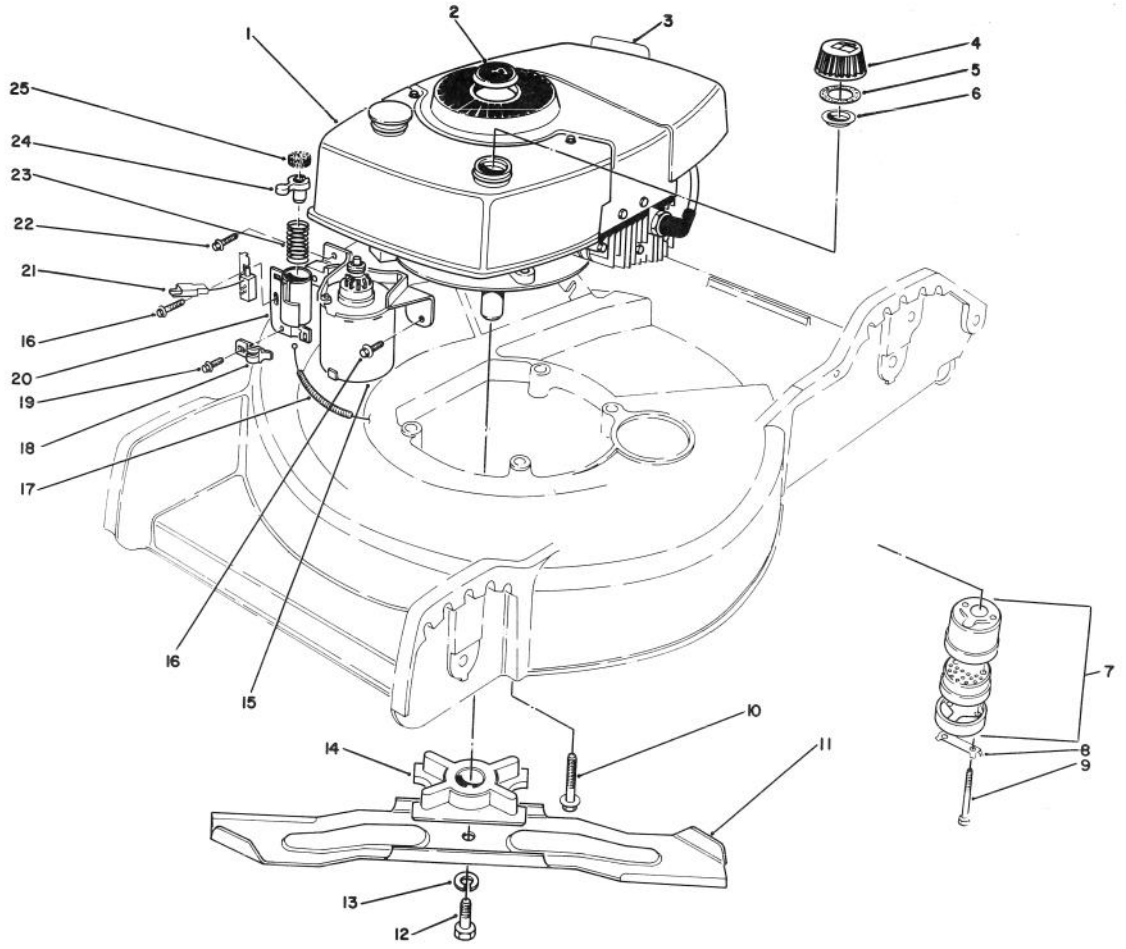

C-0386-89

ENGINE ASSEMBLY

Ref. No.	Part No.	Description	No. Used
1		Engine	1
2	38-1480	Plug - Button	1
3	37-1580	Decal - Maintenance	1
4	42-0682	Gas Cap Assembly (Incl. Ref. # 5 & 6)	1
5	2210-144	Gasket	1
6	2210-143	Baffle	1
7	5-4769	Muffler Assembly (Incl. Ref. # 8 & 9)	1
8	3-5094	Clip - Locking	1
9	321-20	Hex Hd. Capscrew	2
10	11-0581	Screw - Hex Hd. Engine	3
11	33-0490	Blade	1
12	3-5246	Screw - Blade	1
13	3253-22	Lockwasher	1
14	49-7900	Retainer - Blade	1

Ref. No.	Part No.	Description	No. Used
15	49-4210	Motor - Starter	1
16	12-3270	Screw - Special Thread Forming	2
17	43-4531	Cable - Brake	1
18	46-6530	Clamp - Cable	1
19	12-5450	Screw - Self Tapping	1
20	46-5840	Tube Assembly	1
21	70-2490	Switch - Push Button	1
22	11-9760	Screw - Special Thread Forming	1
23	47-2180	Spring - Compression	1
24		Plunger	1
25		Pad - Friction	1
*	47-7350	Plunger & Pad Assembly (Incl. Ref. # 24 & 25)	1

* Not Illustrated

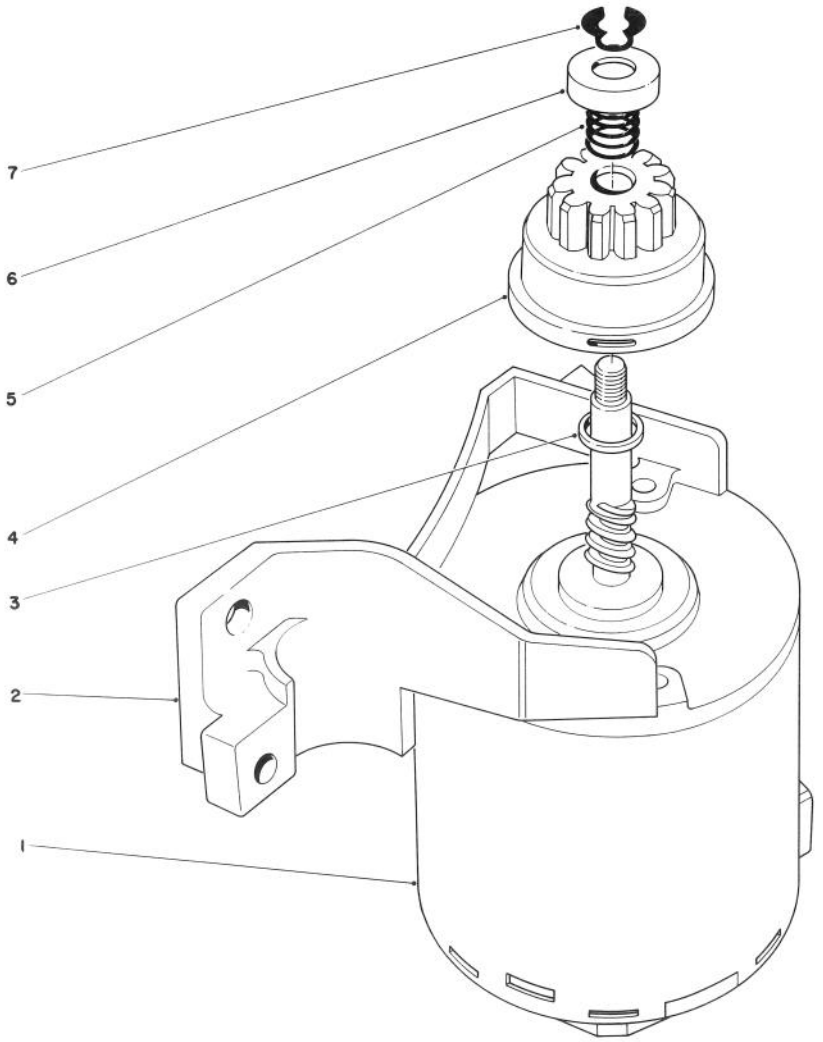

C-0259-89

STARTER ASSEMBLY

Ref. No.	Part No.	Description	No. Used
1	218-543	End Frame w/Brushes & Electrical Terminal	1
2	218-541	End Frame w/Bushing	1
3	23-9591	Spacer	1
4	43-4370	Pinion Assembly	1
5	44-0500	Spring - Compression	1
6	49-2170	Stop - Pinion	1
7	32151-47	Ring - Retaining External	1
*	49-4210	Starter Assembly (Incl. Ref. # 1-7)	1

* Not Illustrated

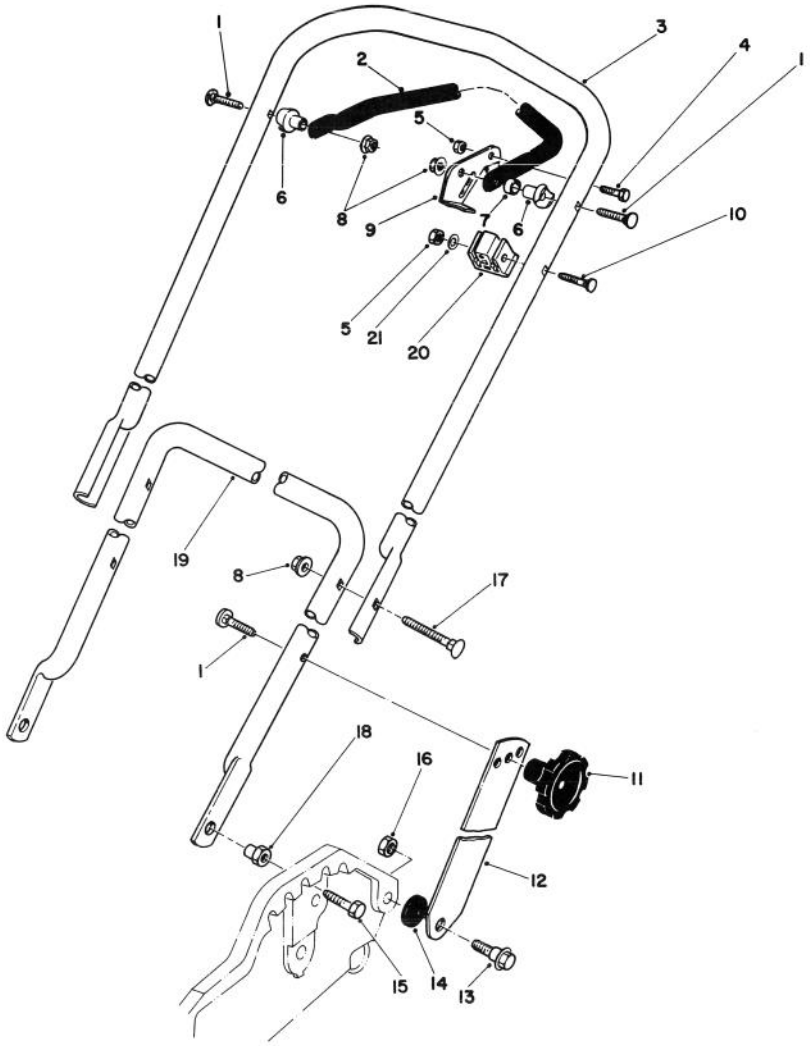

C-0387-89

HANDLE ASSEMBLY

Ref. No.	Part No.	Description	No. Used
1	17-9421	Screw - Handle	4
2	46-9900	Bar - Control	1
3	52-7420	Handle - Upper	1
4	321-3	Hex Hd. Capscrew	1
5	3296-42	Locknut	2
6	49-1630	Support - Spacer	2
7	256-276	Spacer - Nylon	1
8	3296-58	Flange Locknut	4
9	66-5350	Lever - Control	1
10	46-6434	Screw - Handle	1
11	19-4050	Knob - Handle	2

Ref. No.	Part No.	Description	No. Used
12	43-1370	Latch - Handle	2
13	27-7210	Screw - Shoulder	2
14	3-3287	Spacer - Handle Latch	2
15	322-5	Hex Hd. Capscrew	2
16	3296-29	Locknnut	2
17	17-9424	Screw - Handle	2
18	12-2080	Nut - Shoulder	2
19	50-9920	Handle - Lower	1
20	46-6980	Support - Cable	1
21	3256-22	Flat Washer	1

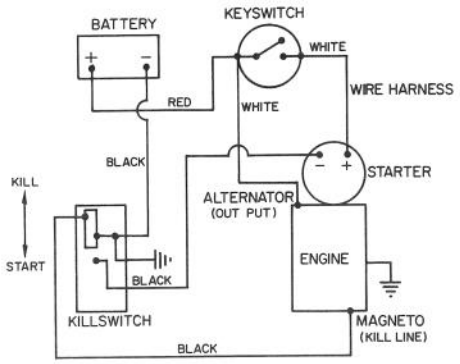

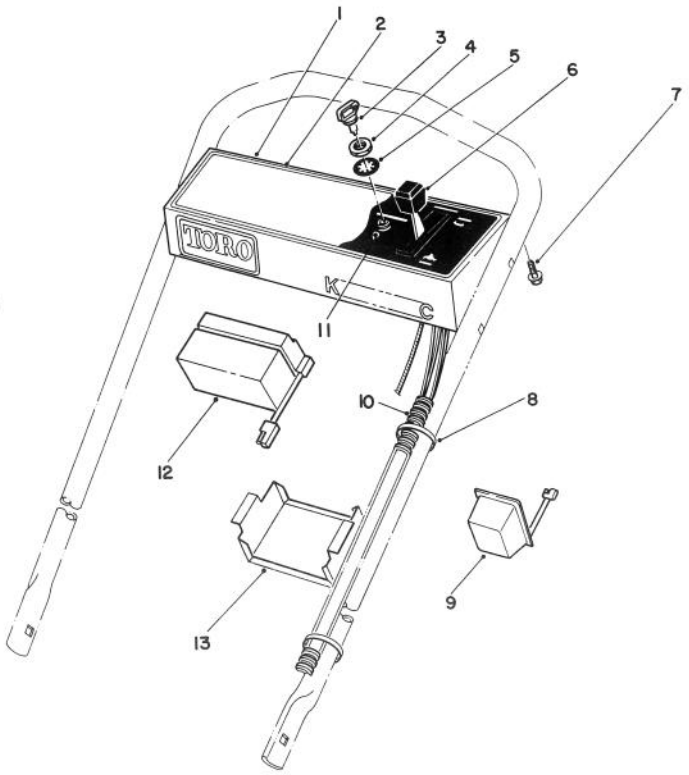

C-0388-89

CONTROL PANEL ASSEMBLY

Ref. No.	Part No.	Description	No. Used
1	11-6919	Control Panel (Incl. Ref. # 2)	1
2	46-7440	Decal - Instructions	1
3	63-8360	Key - Ignition	1
4	218-461	Hex Nut	1
5	3254-5	Lockwasher	1
6	67-9814	Control - Throttle (Bend # 1) (Sheath Lg. 41 1/2" Lg.) (Wire Lg. 2" Lg.)	1

Ref. No.	Part No.	Description	No. Used
7	32104-76	Screw - Self Tapping Acorn Hd.	5
8	3290-378	Cable Tie	3
9	6-9780	Charger - Battery	1
10	46-5810	Wire Harness	1
11	46-5780	Switch - Starter (Incl. Ref. # 4 & 5)	1
12	63-8570	Battery Assembly	1
13	63-8480	Retainer - Battery	1

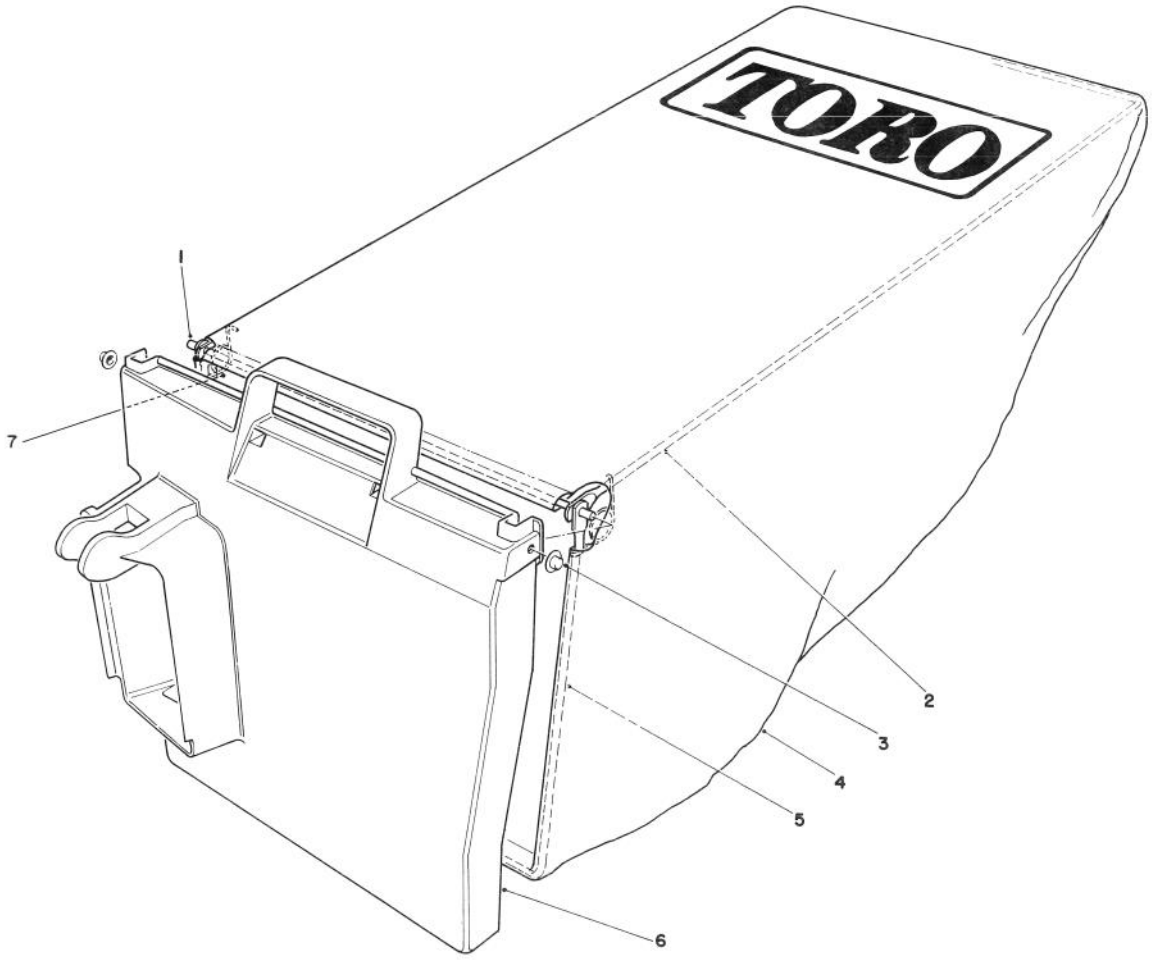

C-0336-89

GRASS BAG ASSEMBLY NO. 11-4949

Ref. No.	Part No.	Description	No. Used
1	50-9670	Hinge	1
2	66-1520	Frame - Bag Upper	1
3	3290-422	Push Nut - Washer Cap	2
4	66-1510	Bag	1

Ref. No.	Part No.	Description	No. Used
5	66-1530	Frame - Bag	1
6	33-2981	Door - Bag	1
7	36-6910	Spring	2

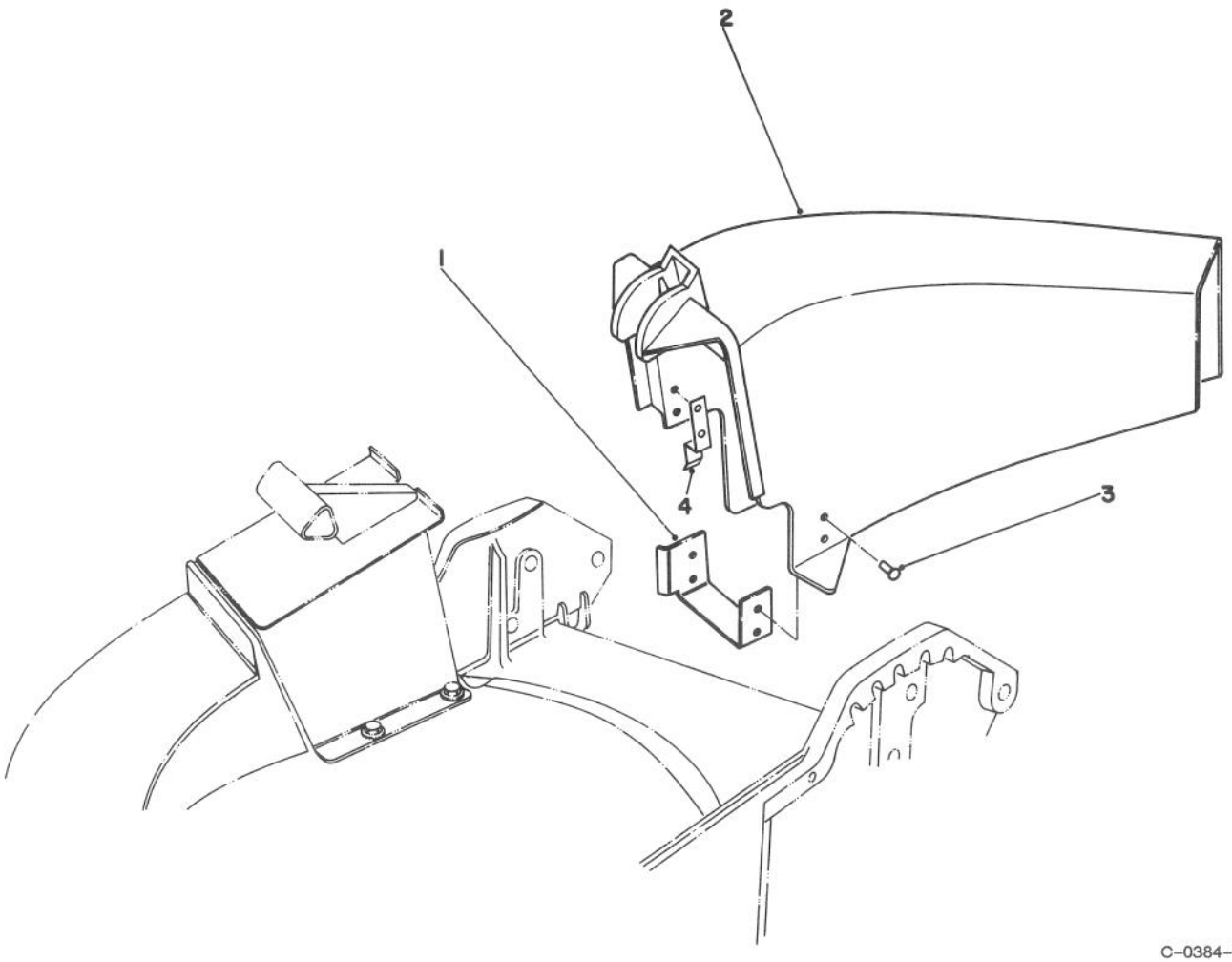

C-0384-89

SIDE DISCHARGE KIT NO. 59107 (OPTIONAL)

Ref. No.	Part No.	Description	No. Used
1	44-2620	Chute Bracket	1
2	44-2610	Chute Discharge	1

Ref. No.	Part No.	Description	No. Used
3	3295-29	Rivet	6
4	46-6400	Tab Chute	1

ENGINE TECUMSEH MODEL NO. TNT 100-10104F

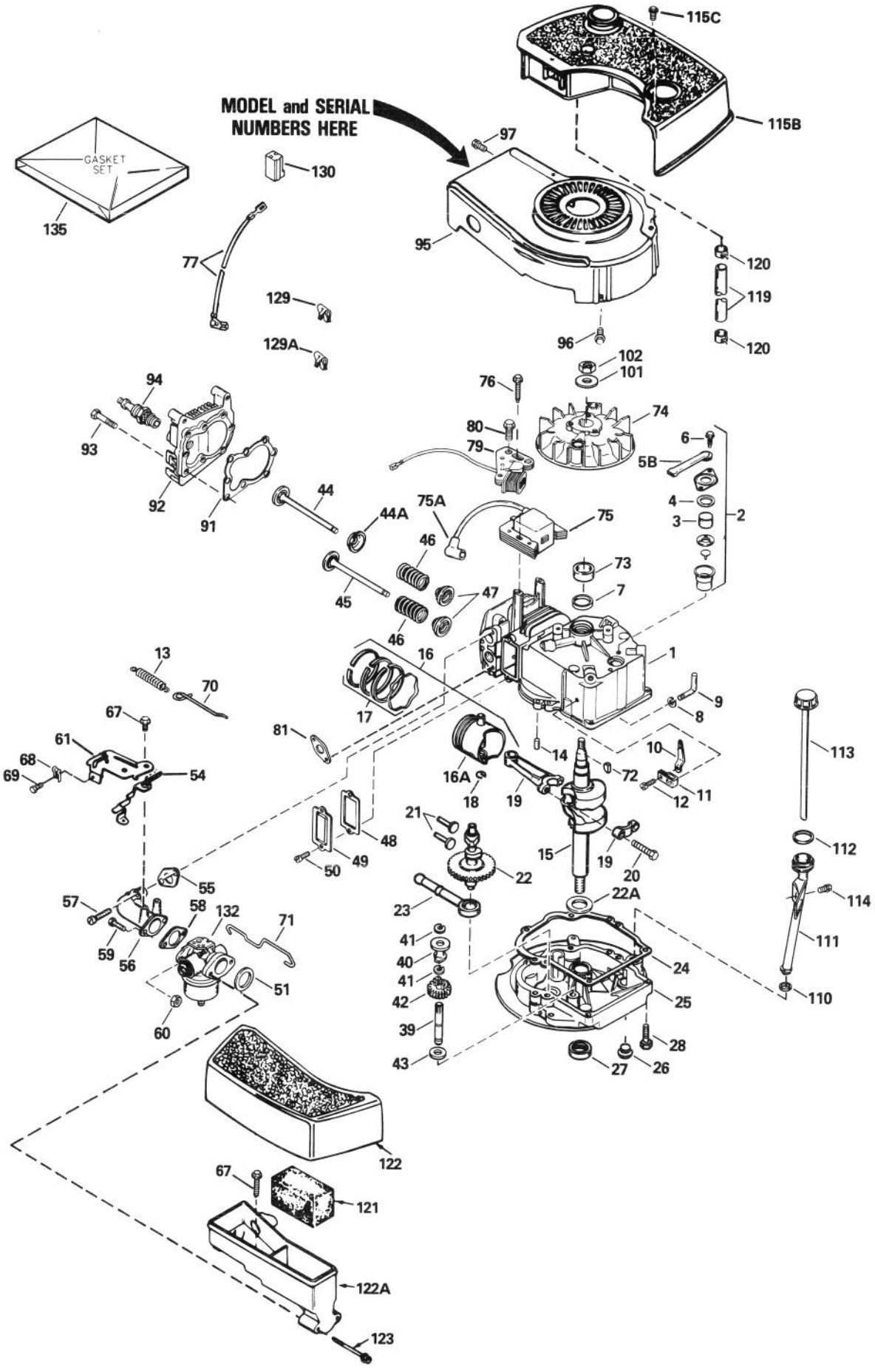

ENGINE TECUMSEH MODEL NO. TNT 100-10104F

Ref. No.	Part No.	Description	No. Used
1	34429A	Cylinder Assy. (Incl. Ref. #6 & 14)	1
2	34214A	Breather Assy. (Incl. Ref. #3-6 & 129)	1
3	33734	Element, Breather	1
4	*33735	Gasket, Breather	1
5B	33886	Tube, Breather	1
6	30200	Screw, Hex Washer Hd. Self-Tap	2
7	32600	Seal, Oil	1
8	28277	Washer, Flat	1
9	30589	Rod, Governor (Incl. Ref. #8)	1
10	32651	Lever, Governor	1
11	31335	Clamp, Governor Lever	1
12	650548	Screw, Hex Washer Hd.	1
13	33890	Spring, Extension	1
14	26727	Pin, Dowel	2
15	35482	Crankshaft Assy.	1
16	35544	Piston, Pin & Ring Assy. (STD.) (Incl. Ref. #16A, 17 & 18)	1
16	35545	Piston, Pin & Ring Assy. (.010 oversize) (Incl. Ref. #16A, 17 & 18)	1
16	35546	Piston, Pin & Ring Assy. (.020 oversize) (Incl. Ref. #16A, 17 & 18)	1
16A	35541	Piston & Pin Assy. (Std.) (Incl. Ref. #18)	1
16A	35542	Piston & Pin Assy. (.010 oversize) (Incl. Ref. #18)	1
16A	35543	Piston & Pin Assy. (.020 oversize) (Incl. Ref. #18)	1
17	35547	Ring Set, Piston (Std.)	1
17	35548	Ring Set, Piston (.010 oversize)	1
17	35549	Ring Set, Piston (.020 oversize)	1
18	20381	Ring, Piston Pin Retaining	1
19	30963B	Rod Assy., Connecting (Incl. Ref. #20)	1
20	32610A	Bolt, Connecting Rod	2
21	27241	Valve, Lifter	2
22	33553	Camshaft (Mech. Compression Release)	1
22A	32323	Washer, Thrust	1
23	29914	Pump Assy., Oil	1
24	*35261	Gasket, Mounting Flange	1
25	34311B	Flange, Mounting (Incl. Ref. #26, 27 & 39)	1
26	27244	Plug, Oil Drain	1
27	27897	Seal, Oil	1
28	650488	Screw, Hex Hd.	6
39	30574	Shaft, Governor	1
40	30588A	Spool, Governor	1
41	29193	Ring, Retaining	2
42	30591	Gear Assy., Governor (Incl. Ref. #43)	1
43	35479	Washer, Flat	1
44	29314B	Valve, Intake (Std.) (Incl. Ref. #47)	1
44	29315C	Valve, Intake (1/32" oversize) (Incl. Ref. #47)	1
44A	35390	Seal Assy., Intake Valve	1
45	29313C	Valve, Exhaust (Std.) (Incl. Ref. #47)	1
45	29315C	Valve, Exhaust (1/32" oversize) (Incl. Ref. #47)	1
46	31672	Spring, Valve	2
47	31673	Cap, Lower Valve Spring	2
48	*27234A	Gasket, Valve Spring Box	1
49	32755	Cover, Valve Spring Box	1
50	650128	Screw, Hex Hd.	2
51	*33051	Gasket, Air Cleaner	1
54	34310	Lever, RPM Adjusting	1
55	*34690A	Gasket, Intake Pipe	1
56	33004A	Pipe, Intake (Incl. Ref. #55)	1
57	650451	Screw, Hex Hd.	2
58	*31688A	Gasket, Carburetor	1
59	6201	Screw, Hex Hd.	2
60	29752	Nut & Lockwasher	2
61	33889A	Bracket Assy., Control (Incl. Ref. #54 & 67)	1
67	650804	Screw, Hex Washer Hd. Shoulder, Self-Tap	2
68	27793	Clip, Conduit	1
69	28942	Screw, Hex Washer Hd.	1
70	33151	Link, Governor Spring	1
71	34336	Link, Throttle	1
72	611004	Key, Flywheel	1
73	34080	Spacer, Flywheel Key	1
74	611050	Flywheel	1
75	34443A	Solid State Assy.	1
75A	610118	Cover, Spark Plug	1
76	650814	Screw, Torx Hex Washer Hd.	2
77	35020	Wire, Ground	1
79	34990	Coil, Alternator	1
80	650767	Screw, Hex Washer Hd.	2
81	*30081A	Gasket, Exhaust	1
91	*33015A	Gasket, Cylinder Head	1
92	34342	Head, Cylinder	1
93	6021A	Screw, Hex Flange Hd.	8
94	35395	Spark Plug, Resistor (Champion RJ-19LM or equivalent)	1
95	33891B	Housing, Blower	1
96	650561	Screw, Hex Washer Hd.	2
97	30200	Screw, Hex Washer Hd. Self-Tap	2
101	650815	Washer, Belleville	1
102	650816	Nut, Flywheel	1
110	34265	Gasket, Fill Tube	1
111	35581	Tube, Oil Fill	1
112	35499	"O" Ring	1
113	35582	Dipstick, Oil Fill	1
114	650562	Screw, Hex Washer Hd.	1
115B	33904B	Tank Assy. (Incl. Ref. #118 & 120)	1
115C	28763	Screw, Hex Washer Hd.	2
119	30705	Line, Fuel	1
120	26460	Clamp, Fuel Line	2
121	33896	Filter, Air Cleaner	1
122	33897	Cover, Air Cleaner	1
122A	33895	Body, Air Cleaner	1
123	650762	Screw, Fil. Hd.	2
129	29443	Clip, Spring	1
129A	33887	Clip, Breather	1
130	34977	Connector, Body	1
132	632050A	Carburetor (Incl. Ref. #58)	1
135	33906B	Gasket Set (Incl. items marked *)	1

* Indicates parts included in Gasket Set, Ref. #135.

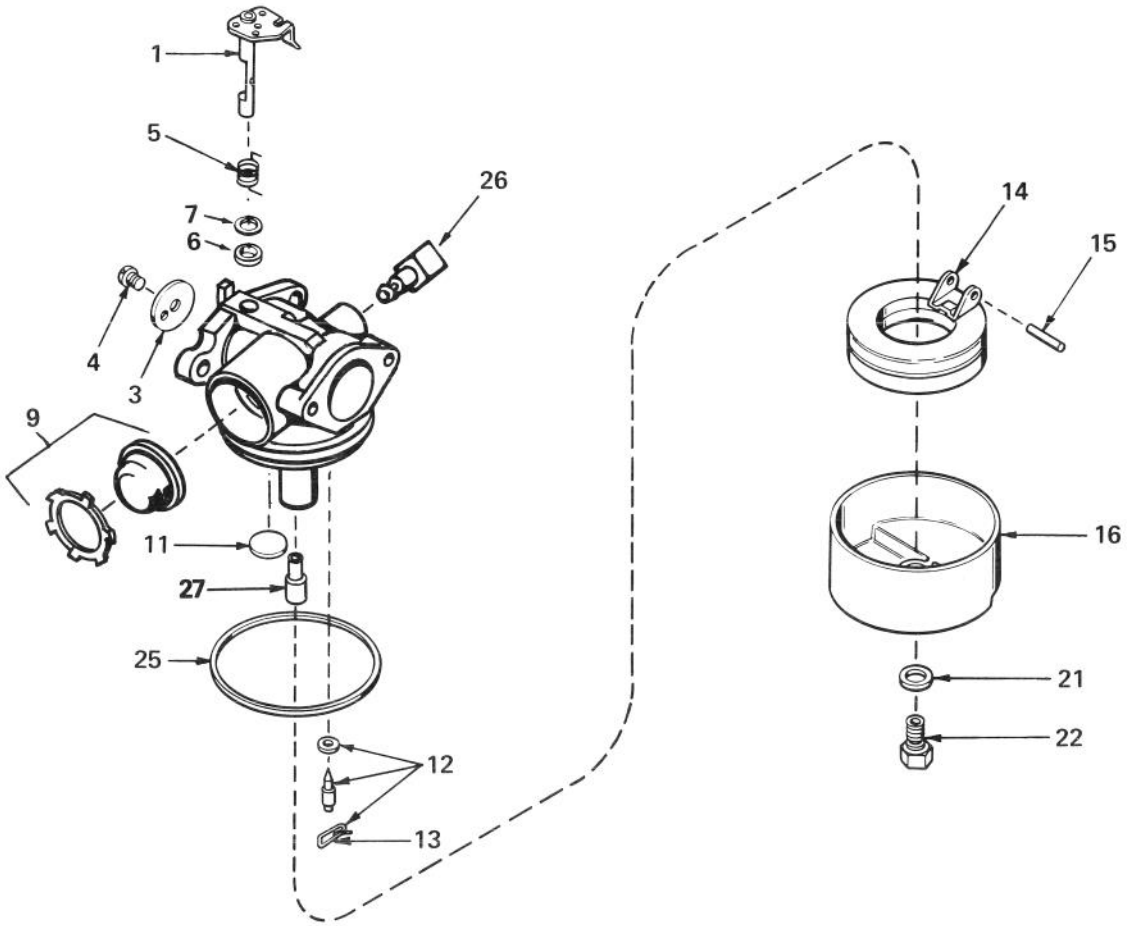

CARBURETOR NO. 632050A

Ref. No.	Part No.	Description	No. Used
1	631615	Shaft & Lever Assy., Throttle	1
3	631616	Shutter, Throttle	1
4	650506	Screw, Throttle Shutter	1
5	631767	Spring, Throttle Return	1
6	631971	Seal, Dust	1
7	631184	Washer, Flat	1
9	632047	Bulb & Retainer, Primer	1
11	631027	Plug, Welch	1
12	631021	Inlet Needle, Seat & Clip Assy. (Incl. Ref. #13)	1

Ref. No.	Part No.	Description	No. Used
13	631022	Clip, Inlet Needle	1
14	632019	Float, Carburetor	1
15	631024	Shaft, Float	1
16	631700	Bowl, Float	1
21	631334	Gasket, Bowl-to-body	1
22	631935	Nut, Float bowl	1
25	631028	Gasket, Bowl-to-body	1
26	631807	Fitting, Fuel Inlet	1
27	632158	Spacer	1

PRODUCT CHANGES

In an effort to make improvements available to TORO owners as quickly as possible, minor changes are incorporated into Toro's products from time to time that do not become immediately shown in the Parts Catalog. If such a change apparently has been made in your unit, which is not reflected in your manual, see your TORO Distributor or his Authorized TORO Service Dealer for information and part numbers.

IDENTIFICATION AND ORDERING

MODEL AND SERIAL NUMBERS

The mower has two identification numbers: a model number and a serial number. The two numbers are stamped on a decal which is located on the mower housing between the rear wheels. In any correspondence concerning the mower, supply model and serial numbers to assure that correct information and replacement parts are obtained.

To order replacement parts from an Authorized TORO Service Dealer, supply the following information:

1. Model and serial number of the mower.
2. Part number, description, and quantity of part(s) desired.

Note: Do not order by reference number if a parts catalog is being used; use the PART NUMBER.

The Toro Promise

A TWO YEAR LIMITED WARRANTY

The Toro Company promises to repair your TORO Product if defective in materials or workmanship. The following time periods from the date of purchase apply:

Residential Product ..... 2 Years
Residential Products Used Commercially... 45 Days

The costs of parts and labor are included, but the customer pays the transportation costs. Just return any residential product to an Authorized TORO Service Dealer or TORO Distributor.

Should you feel your TORO Product is defective and wish to rely on The Toro Promise, the following procedure is recommended:

1. Contact any Authorized TORO Service Dealer, TORO Master Service Dealer, or TORO Distributor (the Yellow Pages of your telephone directory is a good reference source).
2. He will either instruct you to return the product to him or recommend another Authorized TORO Service outlet which might be more convenient.
3. Bring the product along with your original sales slip, or other evidence of purchase date, to the service dealer.
4. The servicing dealer will inspect the unit, advise you whether the product is defective and, if so, make all repairs necessary to correct the defect without extra charge to you.

If for any reason you are dissatisfied with the dealer's analysis of the defect or the service performed, you may contact us.

Write:

TORO Consumer Service Department
8111 Lyndale Avenue South
Minneapolis, Minnesota 55420

The above remedy of product defects through repair by an Authorized TORO Service Dealer is the purchaser's sole remedy for any defect.

THERE IS NO OTHER EXPRESS WARRANTY. ALL IMPLIED WARRANTIES OF MERCHANTABILITY AND FITNESS FOR USE ARE LIMITED TO THE DURATION OF THE EXPRESS WARRANTY.

Some states do not allow limitations on how long an implied warranty lasts, so the above limitation may not apply to you.

This warranty applies only to parts or components which are defective and does not cover repairs necessary due to normal wear, misuse, accidents, or lack of proper maintenance. Regular, routine maintenance of the unit to keep it in proper operating condition is the responsibility of the owner.

All warranty repairs reimbursable under The Toro Promise must be performed by an Authorized TORO Service Dealer using Toro approved replacement parts.

Repairs or attemped repairs by anyone other than an Authorized TORO Service Account are not reimbursable under The Toro Promise. In addition, these unauthorized repair attempts may result in additional malfunctions, the correction of which is not covered by warranty.

THE TORO COMPANY IS NOT LIABLE FOR INDIRECT, INCIDENTAL OR CONSEQUENTIAL DAMAGES IN CONNECTION WITH THE USE OF THE PRODUCT INCLUDING ANY COST OR EXPENSE OF PROVIDING SUBSTITUTE EQUIPMENT OR SERVICE DURING PERIODS OF MALFUNCTION OR NON-USE.

Some states do not allow the exclusion or limitation of incidental or consequential damages, so the above limitation or exclusion may not apply to you.

This warranty gives you specific legal rights, and you may also have other rights which vary from state to state.

COUNTRIES OTHER THAN THE UNITED STATES OR CANADA

Customers who have purchased TORO products exported from the United States or Canada should contact their TORO Distributor (Dealer) to obtain guarantee policies for your country, province or state. If for any reason you are dissatisfied with your Distributor's service or have difficulty obtaining guarantee information, contact the TORO importer. If all other remedies fail, you may contact us at The Toro Company.

Compliance with Radio Interference Regulations Certified.
Certifie Conforme au Reglement sur le Brouillage Radioelectrique.
AL-892292-R

Litho U.S.A.

MAINTENANCE RECORD

Date								