FORM NO. 3313-873

TORO®

MODEL NO. 20586-9000001 & UP

PARTS CATALOG

18" H.P. REAR BAGGER

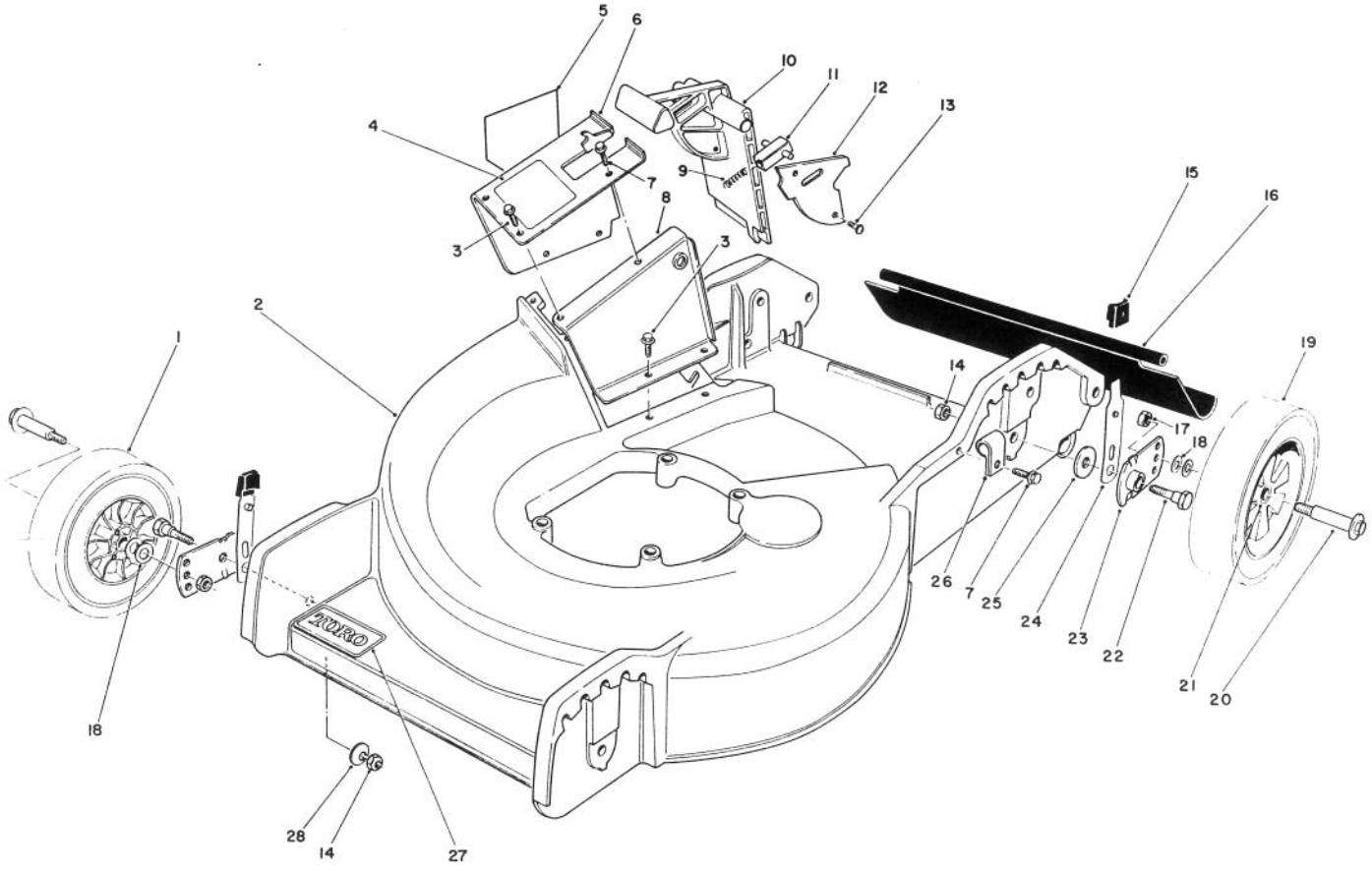

C-0390-89

HOUSING ASSEMBLY

Ref. No.	Part No.	Description	No. Used
1	27-6210	Wheel & Tire Assembly (Incl. Ref. # 21)	2
2	12-1089	Housing	1
3	12-3270	Screw - Thread Forming	6
4	71-3410	Decal - Caution	1
5	39-5770	Decal - Danger	1
6	11-6839	Tunnel - Outer (Incl. Ref. # 4 & 5)	1
7	12-5450	Screw - Thread Forming	2
8	49-8030	Tunnel - Inner	1
9	33-0450	Spring - Latch	1
10	33-0411	Door - Mulching	1
11	47-5550	Latch - Door	1
12	33-0441	Cover - Door	1
13	32144-32	Screw - Self Tapping	2
14	3296-29	Locknut	4
15	25-7740	Knob - Arm	4
16	33-2380	Shield - Rear Safety	1
17	52-3620	Locknut	4
18	40-1940	Washer - Wheel Bolt	8
19	27-6200	Wheel & Tire Assembly (Incl. Ref. # 21)	2
20	27-6230	Bolt - Wheel	4
21	27-6250	Bushing - Wheel	8
22	3-0655	Screw - Pivot	4
23	33-0400	Arm - Pivot	4
24	25-8000	Arm - Spring	4
25	33-0390	Washer - Pivot	4
26	2412-52	Clamp - Conduit	1
27	71-0600	Decal - Toro	1
28	3290-456	Washer - Belleville	2
*		Loose Parts	1

* Not Illustrated

©The TORO Company - 1989

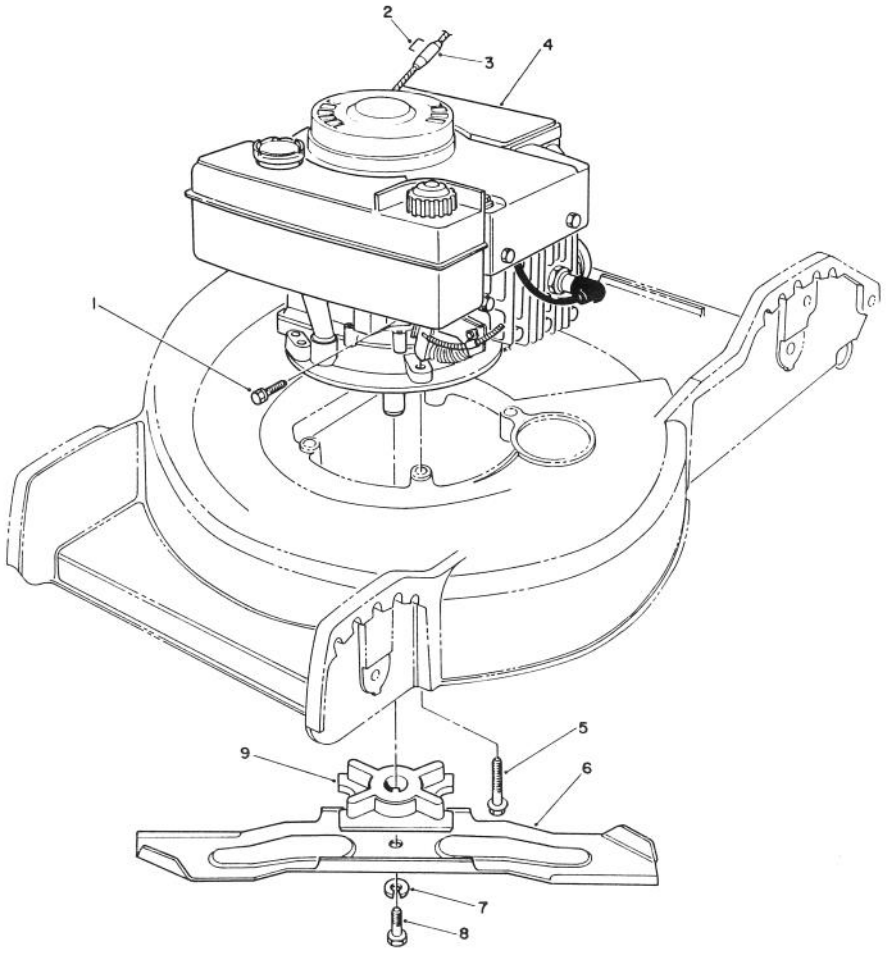

C-0322-89

ENGINE ASSEMBLY

Ref. No.	Part No.	Description	No. Used
1	2210-250	Screw - Hex Hd.	1
†2		Staple	1
3		Stop - Rope	1
4		Engine	1
5	11-0581	Screw - Engine	3

Ref. No.	Part No.	Description	No. Used
6	33-0490	Blade - 18"	1
7	3253-22	Lockwasher	1
8	26-0671	Screw - Blade	1
9	49-7900	Retainer - Blade	1

† Obtain Locally

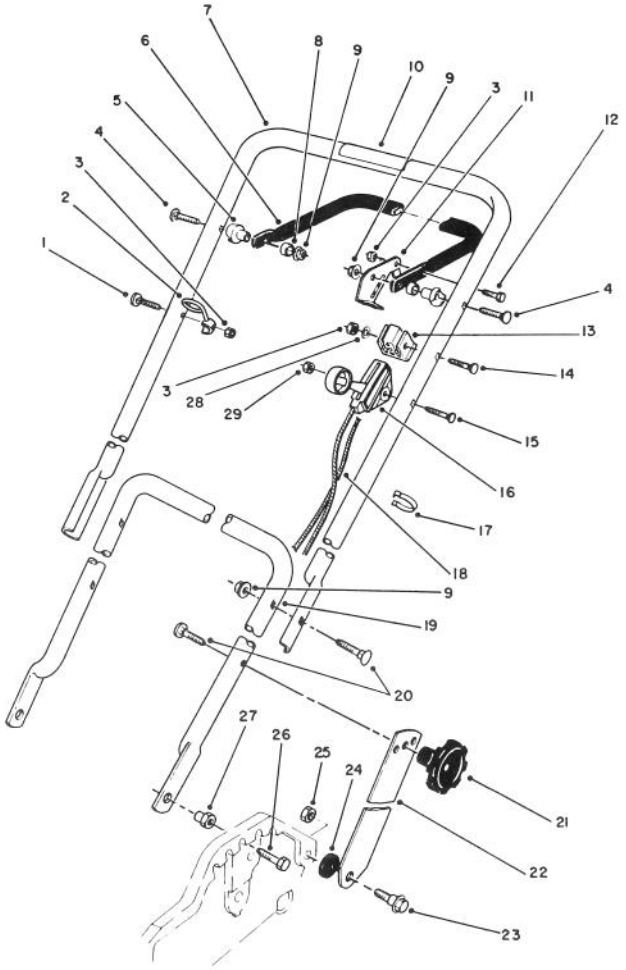

C-0323-89

HANDLE & THROTTLE CONTROL ASSEMBLY

Ref. No.	Part No.	Description	No. Used
1	46-6433	Screw - Guide	1
2	46-8080	Guide - Rope	1
3	3296-42	Locknut	3
4	17-9421	Screw - Handle	2
5	49-1630	Support - Spacer	2
6	49-4221	Bar - Control	1
7	13-2299	Handle - Upper (Incl. Ref. # 10)	1
8	256-276	Bushing - Nylon	2
9	3296-58	Flange Locknut	2
10	52-7510	Decal - Warning	1
11	66-5350	Lever - Control	1
12	321-3	Hex Hd. Capscrew	1
13	46-6980	Support - Cable	1
14	46-6434	Screw - Handle	1
15	46-6430	Screw - Handle	1

Ref. No.	Part No.	Description	No. Used
16	70-7570	Control - Throttle (Bend # 1) (Sheath Lg. 42") (Wire Lg. 1 3/4" Lg.)	1
17	218-465	Clip - Cable	1
18	46-8012	Cable Brake	1
19	50-9920	Handle - Lower	1
20	17-9424	Screw - Handle	4
21	19-4050	Knob - Handle	2
22	43-1370	Latch - Handle	2
23	27-7210	Screw - Shoulder	2
24	3-3287	Spacer - Latch Handle	2
25	3296-29	Locknut	2
26	322-5	Hex Hd. Capscrew	2
27	12-2080	Nut - Shoulder	2
28	3256-22	Flat Washer	1
29	3296-56	Locknut	1

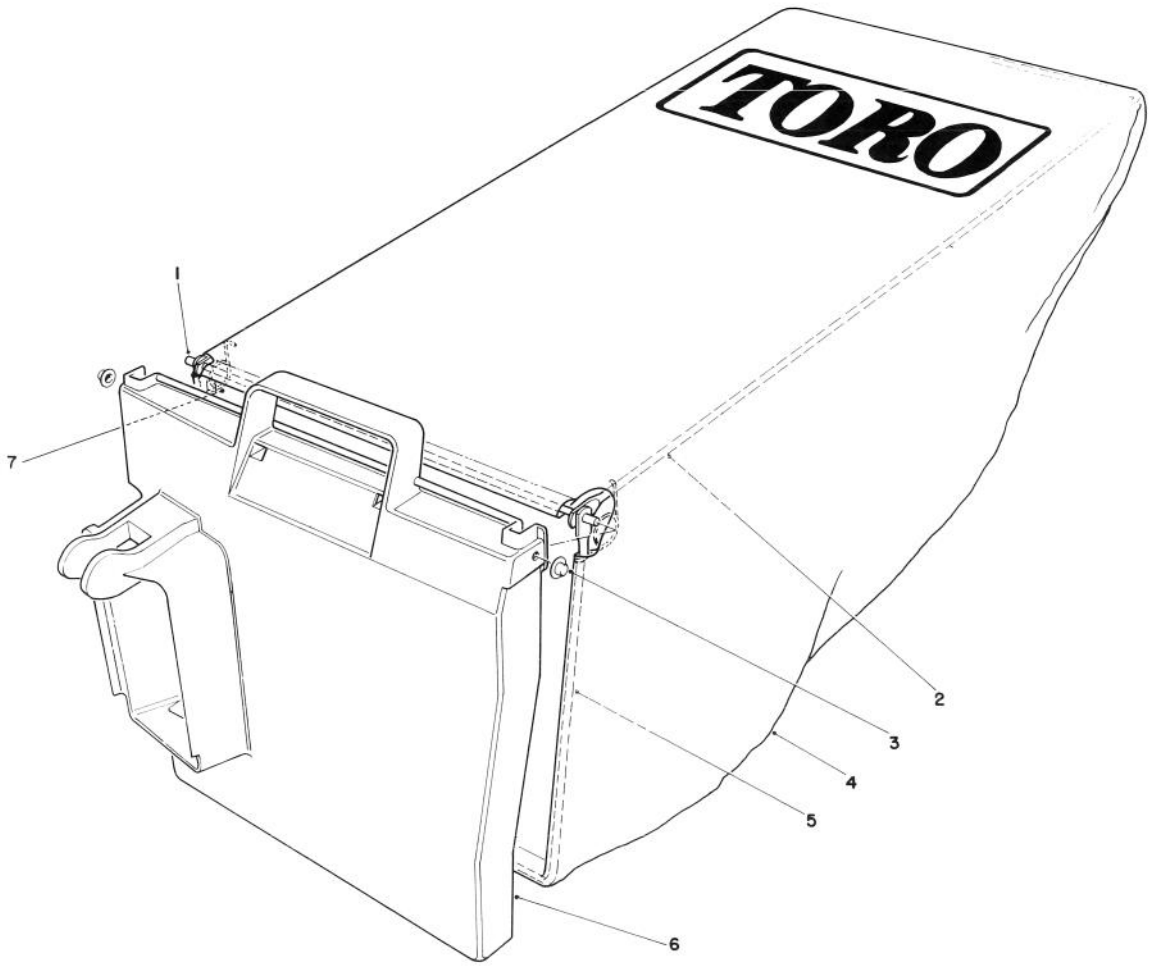

C-0336-89

GRASS BAG ASSEMBLY NO. 11-4949

Ref. No.	Part No.	Description	No. Used
1	50-9670	Hinge	1
2	66-1520	Frame Bag - Upper	1
3	3290-422	Push Nut	2
4	66-1510	Bag	1
5	66-1530	Frame - Bag	1
6	33-2981	Door - Bag	1
7	36-6910	Spring	2

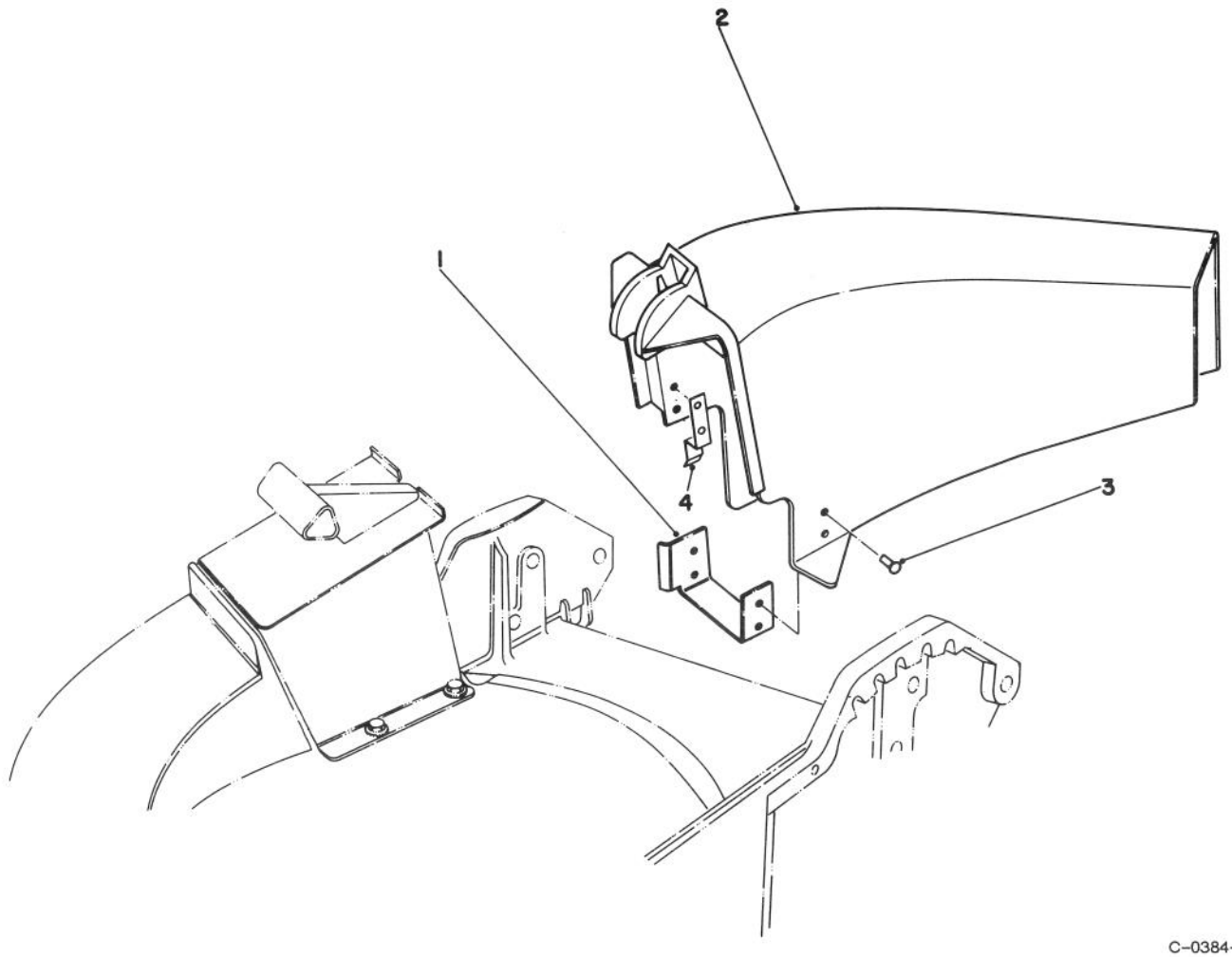

C-0384-89

SIDE DISCHARGE KIT NO. 59107 (OPTIONAL)

Ref. No.	Part No.	Description	No. Used
1	44-2620	Chute Bracket	1
2	44-2610	Chute Discharge	1

Ref. No.	Part No.	Description	No. Used
3	3295-29	Rivet	6
4	46-6400	Tab Chute	1

ENGINE TECUMSEH MODEL NO. TVS100-44016B

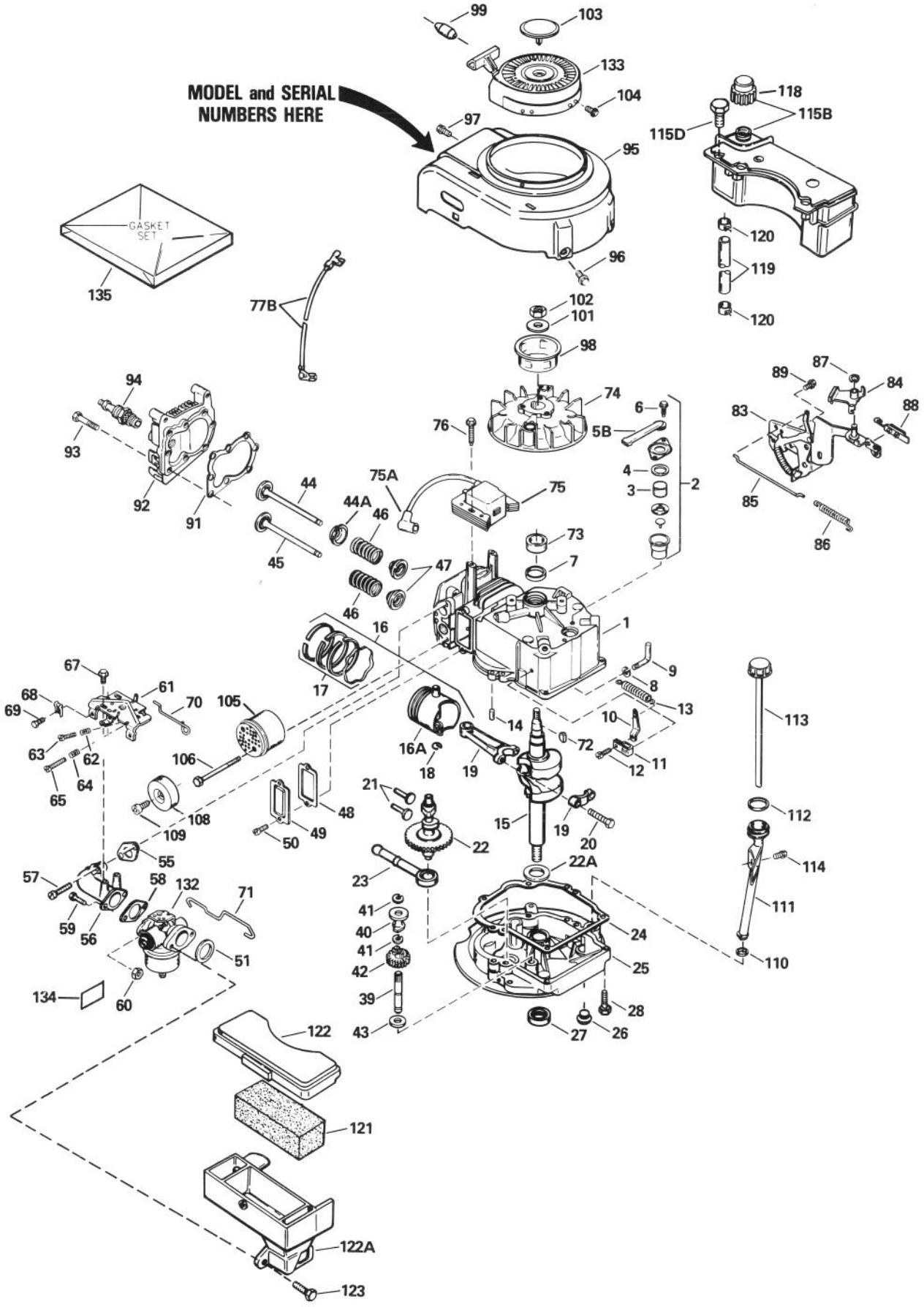

ENGINE TECUMSEH MODEL NO. TVS100-44016B

Ref. No.	Part No.	Description	No. Used
1	35010	Cylinder Assembly (Incl. Ref. #7 & 14)	1
2	34214A	Breather Assembly (Incl. Ref. #3-6)	1
3	33734	Element — Breather	1
4	*33735	Gasket — Breather	1
5B	33886	Tube — Breather	1
6	30200	Screw — Hex Washer Hd.	2
7	32600	Seal — Oil	1
8	28277	Washer — Flat	1
9	30589	Rod — Governor (Incl. Ref. #8)	1
10	31383A	Lever — Governor	1
11	31335	Clamp — Governor Lever	1
12	650548	Screw — Hex Washer Hd.	1
13	31361	Spring — Extension	1
14	26727	Pin — Dowel	2
15	35482	Crankshaft Assembly	1
16	35544	Piston — Pin & Ring Assy. (Std.) (Incl. Ref. #16A, 17 & 18)	1
16	35545	Piston — Pin & Ring Assembly (.010 oversize) (Incl. Ref. #16A, 17 & 18)	1
16	35546	Piston — Pin & Ring Assembly (.020 oversize) (Incl. Ref. #16A, 17 & 18)	1
16A	35541	Piston & Pin Assembly (Std.) (Incl. Ref. #18)	1
16A	35542	Piston & Pin Assembly (.010 oversize) (Incl. Ref. #18)	1
16A	35543	Piston & Pin Assembly (.020 oversize) (Incl. Ref. #18)	1
17	35547	Ring Set — Piston (Std.)	1
17	35548	Ring Set — Piston (.010 oversize)	1
17	35549	Ring Set — Piston (.020 oversize)	1
18	20381	Ring — Piston Pin Retaining	1
19	30963B	Rod Assembly — Connecting (Incl. Ref. #20)	1
20	32610A	Bolt — Connecting Rod	1
21	27241	Valve — Lifter	2
22	33553	Camshaft (Mechanical Compression Release)	1
22A	32323	Washer — Thrust	1
23	29914	Pump Assembly — Oil	1
24	*35261	Gasket — Mounting Flange	1
25	34311B	Flange — Mounting (Incl. Ref. #26, 27 & 39)	1
26	27244	Plug — Oil Drain	1
27	27897	Seal — Oil	1
28	650488	Screw — Hex Hd.	6
39	30574	Shaft — Governor	1
40	30588A	Spool — Governor	1
41	29193	Ring — Retaining	1

* Indicates parts included in Gasket Set, Ref. #135.

Ref. No.	Part No.	Description	No. Used
42	30591	Gear Assembly — Governor (Incl. Ref. #43)	1
43	35479	Washer — Flat	1
44	29314B	Valve — Intake (Std.) (Incl. Ref. #47)	1
44	29315C	Valve — Intake (1/32" oversize) (Incl. Ref. #47)	1
44A	35390	Seal Assy. — Intake Valve	1
45	29313C	Valve — Exhaust (Std.) (Incl. Ref. #47)	1
45	29315C	Valve — Exhaust (1/32" oversize) (Incl. Ref. #47)	1
46	31672	Spring — Valve	2
47	31673	Cap — Lower Valve Spring	2
48	*27234A	Gasket — Valve Spring Box	1
49	32755	Cover — Valve Spring Box	1
50	650128	Screw — Hex Hd.	2
51	*34338	Gasket — Air Cleaner	1
55	*34690A	Gasket — Intake Pipe	1
56	31384A	Pipe — Intake (Incl. Ref. #55)	1
57	650451	Screw — Hex Hd.	2
58	*26756	Gasket — Carburetor	1
59	6201	Screw — Hex Hd.	2
60	29752	Nut & Lockwasher	2
61	33131A	Bracket Assembly — Control (Incl. Ref. #62-65)	1
62	33802	Spring — Compression	1
63	650777	Screw — Fil. Hd.	1
64	31342	Spring — Compression	1
65	650549	Screw — Fil. Hd.	1
67	30200	Screw — Hex Washer Hd.	2
68	27793	Clip — Conduit	1
69	28942	Screw — Hex Washer Hd.	1
70	34337	Link — Governor Spring	1
71	34336	Link — Throttle	1
72	611004	Key — Flywheel	1
73	34080	Spacer — Flywheel Key	1
74	611112	Flywheel	1
75	34443A	Solid State Assembly	1
75A	610118	Cover — Spark Plug	1
76	650814	Screw — Torx Hex Washer Hd.	2
77B	34961	Wire — Ground	1
83	35015A	Bracket — S.E. Brake	1
84	34968	Lever — Brake	1
85	34966	Link — Control	1
86	34965	Spring — Extension	1
87	32309	Ring — Retaining	1
88	610973	Terminal Assembly	1
89	650839	Screw — Hex Washer Hd.	2
91	*33015A	Gasket — Cylinder Head	1
92	34342	Head — Cylinder	1
93	6021A	Screw — Hex Flange Hd.	8
94	35395	Spark Plug — Resistor (Champion RJ-19LM or equivalent)	1

ENGINE TECUMSEH MODEL NO. TVS100-44016B (Continued)

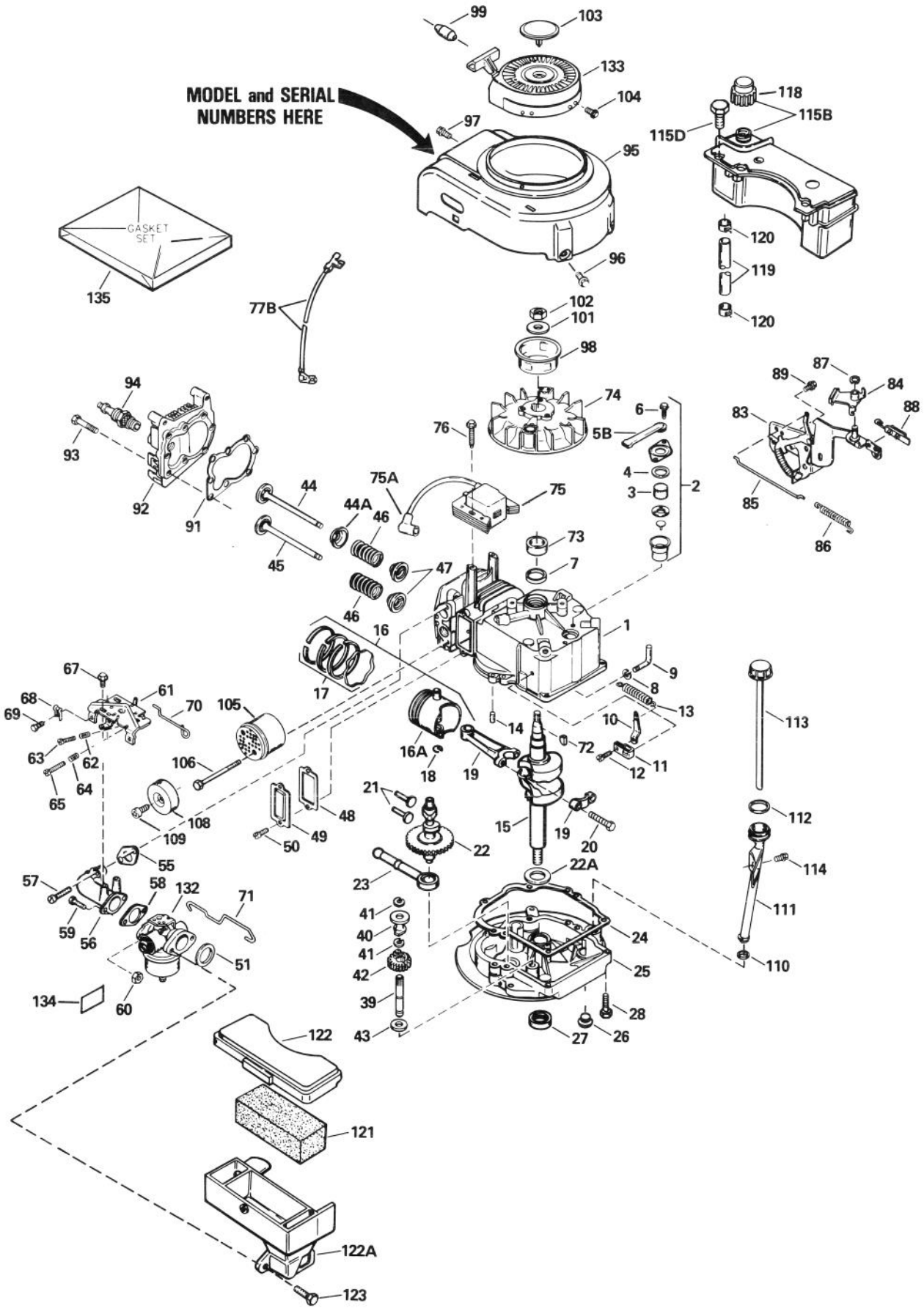

ENGINE TECUMSEH MODEL NO. TVS100-44016B (Continued)

Ref. No.	Part No.	Description	No. Used
95	35484	Housing — Blower	1
96	650831	Screw — Hex Washer Hd.	2
97	30200	Screw — Hex Washer Hd.	2
98	35000	Hub — Starter	1
99	34985	Retainer — Starter Roper (ECV)	1
101	650815	Washer — Belleville	1
102	650816	Nut — Flywheel	1
103	35392	Plug — Starter	1
104	650884	Screw — Hex Washer Hd.	4
105	27181B	Muffler Assembly (Incl. Ref. #106)	1
106	650795	Screw — Hex Hd.	2
108	32431	Cover — Muffler	1
109	650760	Screw — Pan Hd.	1
110	34265	Gasket — Fill Tube	1
111	35577	Tube — Oil Fill	1
112	35499	"O" Ring	1
113	35578	Dipstick — Oil Fill	1
114	650562	Screw — Hex Washer Hd.	1
115B	34476	Tank Assembly (Incl. Ref. #118 & 120)	1
115D	28763	Screw — Hex Washer Hd.	2
118	33032	Cap — Fuel	1
119	30705	Line — Fuel	1
120	26460	Clamp — Fuel Line	1
121	34340	Filter — Air Cleaner	1
122	34341A	Cover — Air Cleaner	1
122A	34858	Body — Air Cleaner	1
123	650806	Screw — Hex Washer Hd. Shoulder	2
132	632098	Carburetor (Incl. Ref. #58)	1
133	590621	Starter — Rewind	1
134	34144	Decal — Primer	1
135	33238D	Gasket Set (Incl. Items Marked *)	1

* Indicates parts included in Gasket Set, Ref. #135.

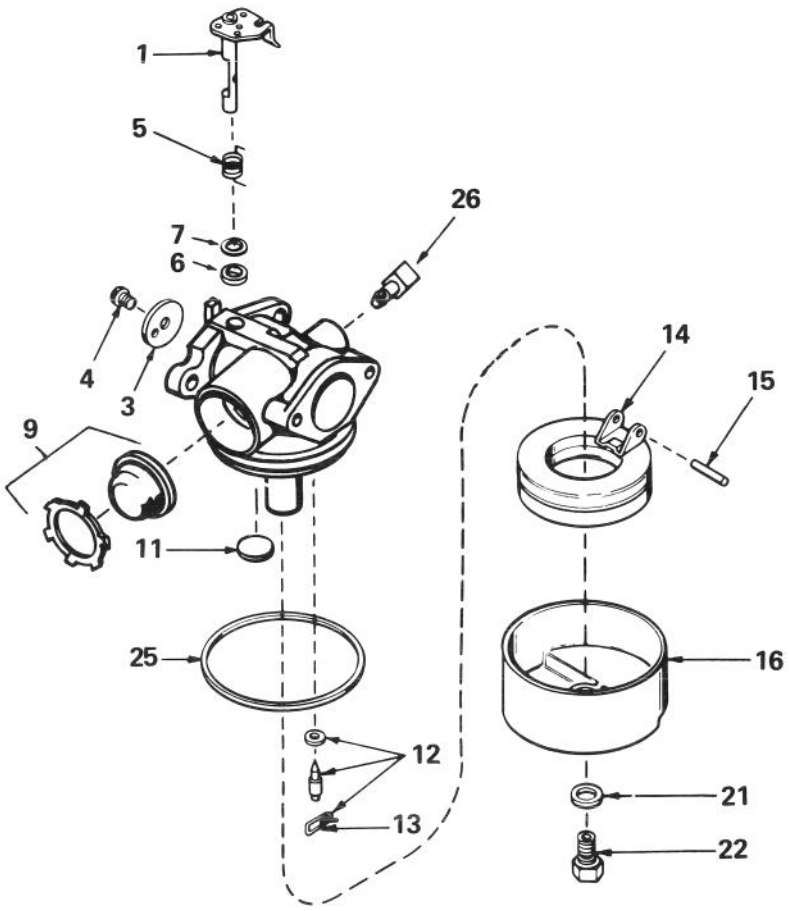

CARBURETOR NO. 632098

Ref. No.	Part No.	Description	No. Used
1	631615	Shaft & Lever Assy. — Throttle	1
3	631616	Shutter — Throttle	1
4	650506	Screw — Throttle Shutter	1
5	631767	Spring — Throttle Return	1
6	631971	Seal — Dust	1
7	631184	Washer — Flat	1
9	632047	Primer Assembly	1
11	631027	Plug — Welch	1
12	631021	Inlet Needle — Seat & Clip Assy. (Incl. Ref. #13)	1

Ref. No.	Part No.	Description	No. Used
13	631022	Clip — Inlet Needle	1
14	632019	Float — Carburetor	1
15	631024	Shaft — Float	1
16	631700	Bowl — Float	1
21	631334	Gasket — Bowl-To-Body	1
22	631937	Nut — Float Bowl	1
25	631028	Gasket — Bowl-To-Body	1
26	631807	Fitting — Fuel Inlet	1

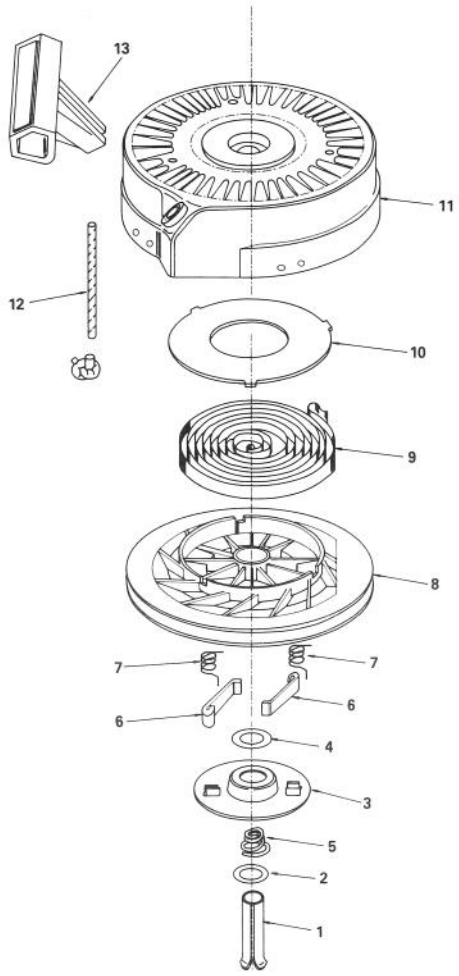

REWIND STARTER NO. 590621

Ref. No.	Part No.	Description	No. Used
1	590599A	Pin — Spring (Incl. Ref. #4)	1
2	590600	Washer	1
3	590615	Retainer	1
4	590601	Washer	1
5	590598	Spring — Brake	1
6	590616	Dog — Starter	2
7	590617	Spring — Dog	2

Ref. No.	Part No.	Description	No. Used
8	590618	Pulley	1
9	590619	Spring — Rewind	1
10	590620	Cover — Spring	1
11	590622	Housing Assembly — Starter	1
12	590535	Rope — Starter (Length 98" & 9/64" dia.)	1
13	590452	Handle — Starter	1

MAINTENANCE RECORD

Date	Hours Used	Oil Change	Air Cleaner Service	Lubrication	Sharpen Blade	Winter Storage	Spring Service	Spark Plug Gap