FORM NO. 3313-896

TORO®

MODEL NO. 20677-9000001 & UP

PARTS CATALOG

21" S.P. REAR BAGGER KEY-LECTRIC

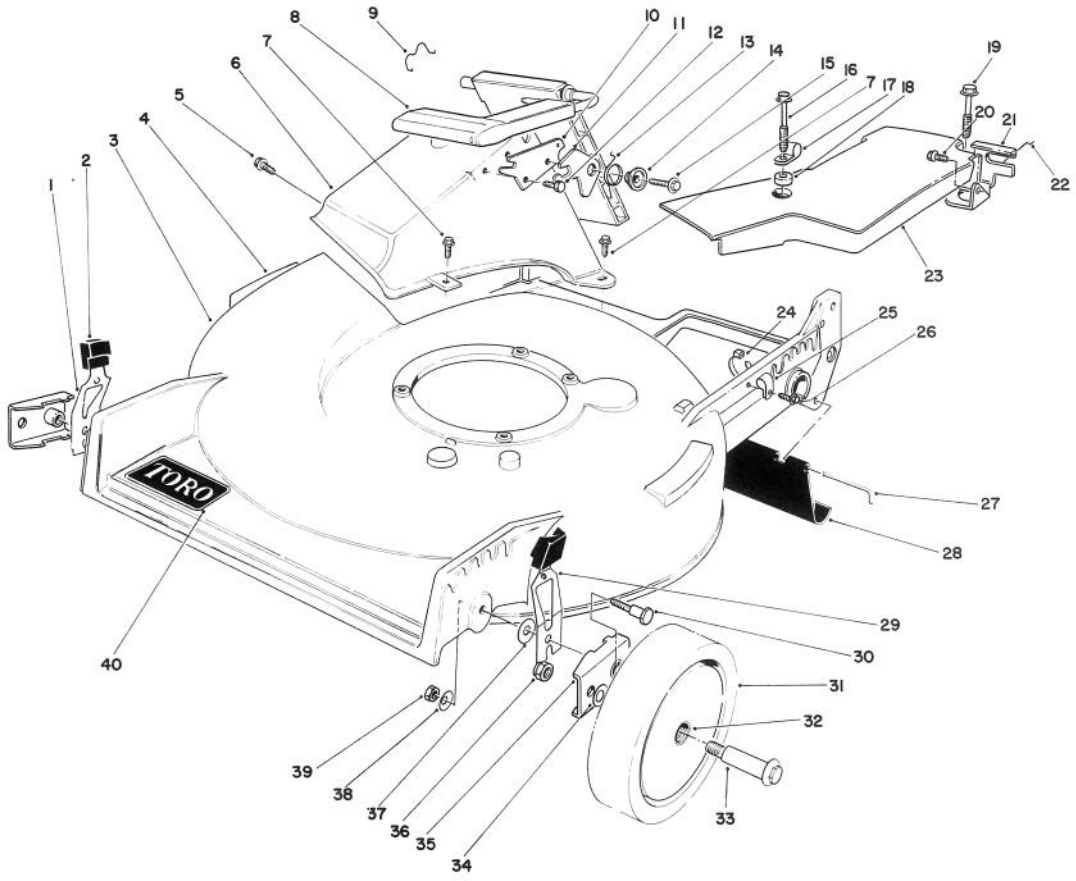

C-0401-89

HOUSING ASSEMBLY
(Serial No. 9000101-9003507)

Ref. No.	Part No.	Description	No. Used
1	52-7480	Spring Arm Assembly	1
2	25-7740	Knob — Arm	2
3	11-4089	Housing (Incl. Ref. #4 & 40)	1
4	39-5770	Decal — Danger	1
5	46-6810	Screw & Washer Assembly	1
6	46-3500	Tunnel — Discharge	1
7	46-6811	Screw — Thread Forming	3
8	51-0201	Discharge Door Assembly	1
9	47-5840	Retainer Door	1
10	23-1040	Plate — Latch	1
11	42-4010	Latch — Safety	1
12	46-8090	Hex Hd. Self-Tapping Screw	1
13	33-4860	Spring — Torsion	1
14	43-4840	Spacer — Latch	1
15	46-8091	Hex Hd. Self-Tapping Screw	1
16	37-7262	Screw — Special	1
17	2412-87	Clamp — Cable	1

Ref. No.	Part No.	Description	No. Used
18	3-5792	Washer	1
19	37-7260	Screw — Special	1
20	32144-70	Screw — Thread Forming	1
21	62-3940	Bracket — Traction Adjustment	1
22	46-7030	Retainer — Cable	1
23	62-4314	Cover — Belt	1
24	3290-378	Cable Tie	1
25	2412-83	R-Clamp	1
26	12-5450	Screw — Self-Tapping	1
27	33-3208	Rod — Shield	1
28	44-0580	Shield — Trailing	1
29	52-7490	Spring Arm Assembly	1
30	44-5270	Screw — Pivot	2
31	11-9509	Wheel & Tire Assembly (Incl. Ref. #32)	2

©The TORO Company — 1989

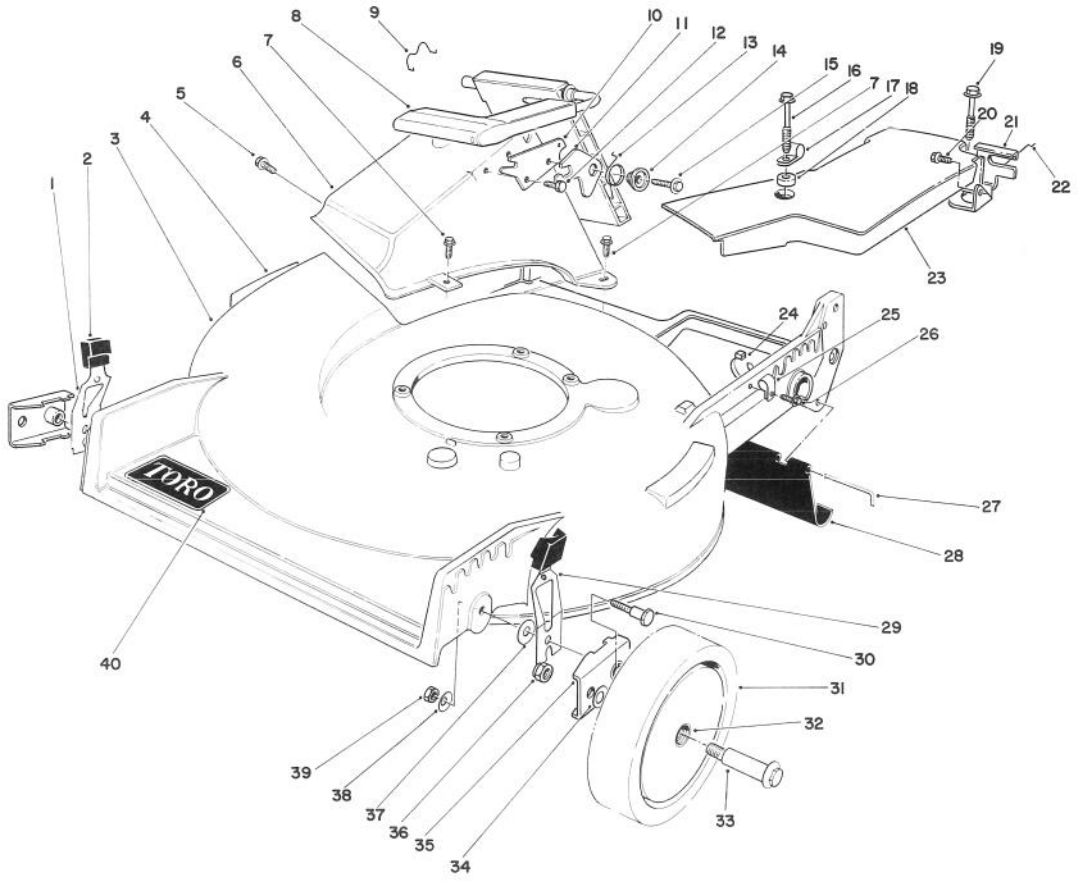

C-0401-89

HOUSING ASSEMBLY (Continued)
(Serial No. 9000101-9003507)

Ref. No.	Part No.	Description	No. Used
32	27-6250	Bushing	4
33	27-6231	Bolt — Wheel	2
34	40-1940	Washer — Wheel Bolt	2
35	47-2940	Pivot Arm Assembly	2
36	52-3620	Locknut	2

Ref. No.	Part No.	Description	No. Used
37	5-4460	Washer — Pivot	2
38	3290-456	Washer — Belleville	2
39	3296-29	Locknut	2
40	71-0600	Decal — Toro	1

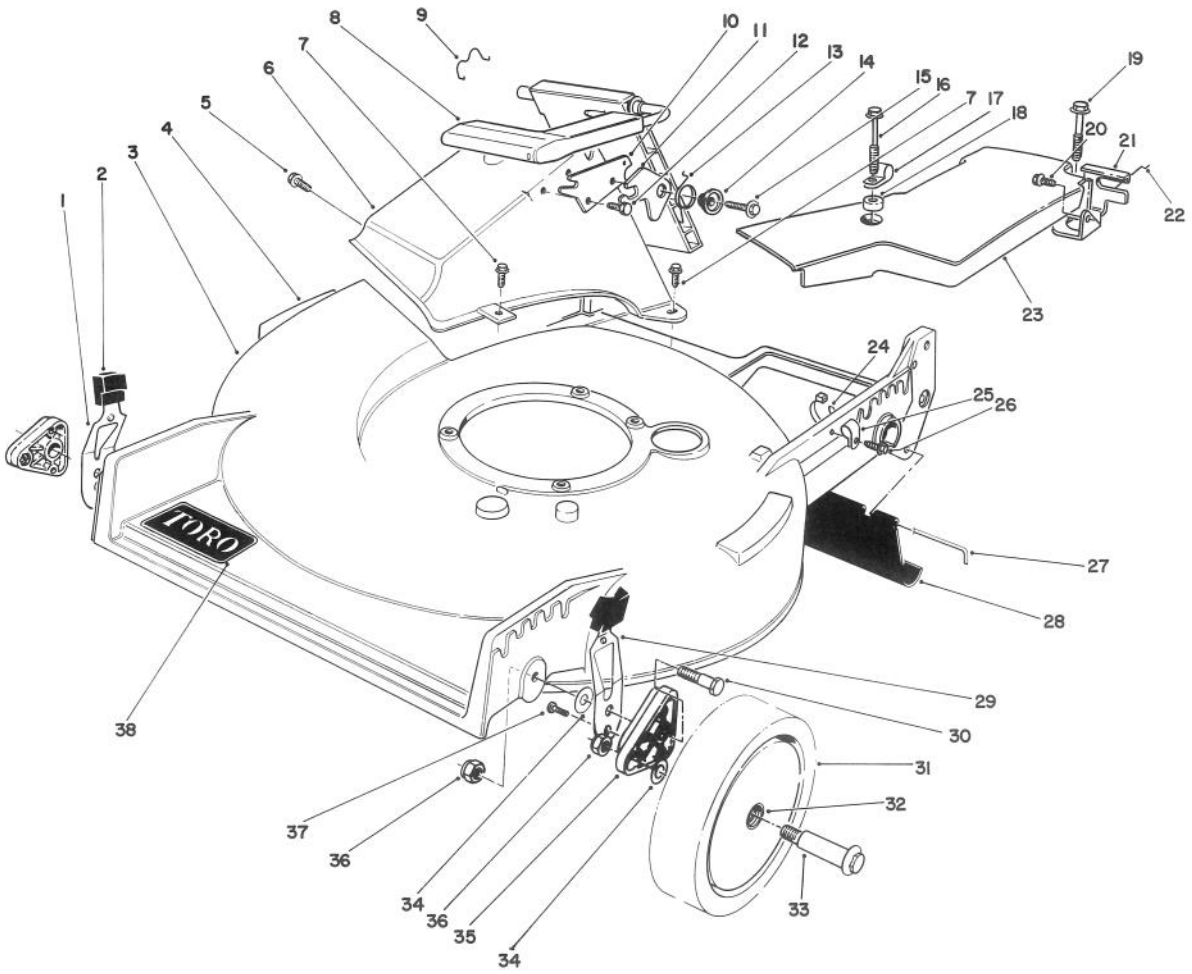

C-0418-89

HOUSING ASSEMBLY
(Serial No. 9003508-9099999)

Ref. No.	Part No.	Description	No. Used
1	71-0560	Spring Arm Assembly RH	1
2	25-7740	Knob — Arm	2
3	13-4679	Housing (Incl. Ref. #4 & 38)	1
4	39-5770	Decal — Danger	1
5	46-6810	Screw & Washer Assembly	1
6	46-3500	Tunnel — Discharge	1
7	46-6811	Screw — Thread Forming	3
8	51-0201	Discharge Door Assembly	1
9	47-5840	Retainer Door	1
10	23-1040	Plate — Latch	1
11	42-4010	Latch — Safety	1
12	46-8090	Hex Hd. Self-Tapping Screw	1
13	33-4860	Spring — Torsion	1
14	43-4840	Spacer — Latch	1
15	46-8091	Hex Hd. Self-Tapping Screw	1
16	37-7262	Screw — Special	1
17	2412-87	Clamp — Cable	1
18	3-5792	Washer	1
19	37-7260	Screw — Special	1
20	32144-70	Screw — Thread Forming	1

Ref. No.	Part No.	Description	No. Used
21	62-3940	Bracket — Traction Adjustment	1
22	46-7030	Retainer — Cable	1
23	62-4314	Cover — Belt	1
24	3290-378	Cable Tie	1
25	2412-83	R-Clamp	1
26	12-5450	Screw — Self-Tapping	1
27	33-3208	Rod — Shield	1
28	44-0580	Shield — Trailing	1
29	71-0570	Spring Arm Assembly LH	1
30	66-0561	Screw — Pivot	2
31	11-9509	Wheel & Tire Assembly (Incl. Ref. #32)	2
32	27-6250	Bushing	4
33	27-6231	Bolt — Wheel	2
34	40-1940	Washer — Wheel Bolt	4
35	66-0580	Arm — Pivot	2
36	52-3620	Locknut	4
37	32144-85	Screw — Thread Forming	2
38	71-0600	Decal — Toro	1

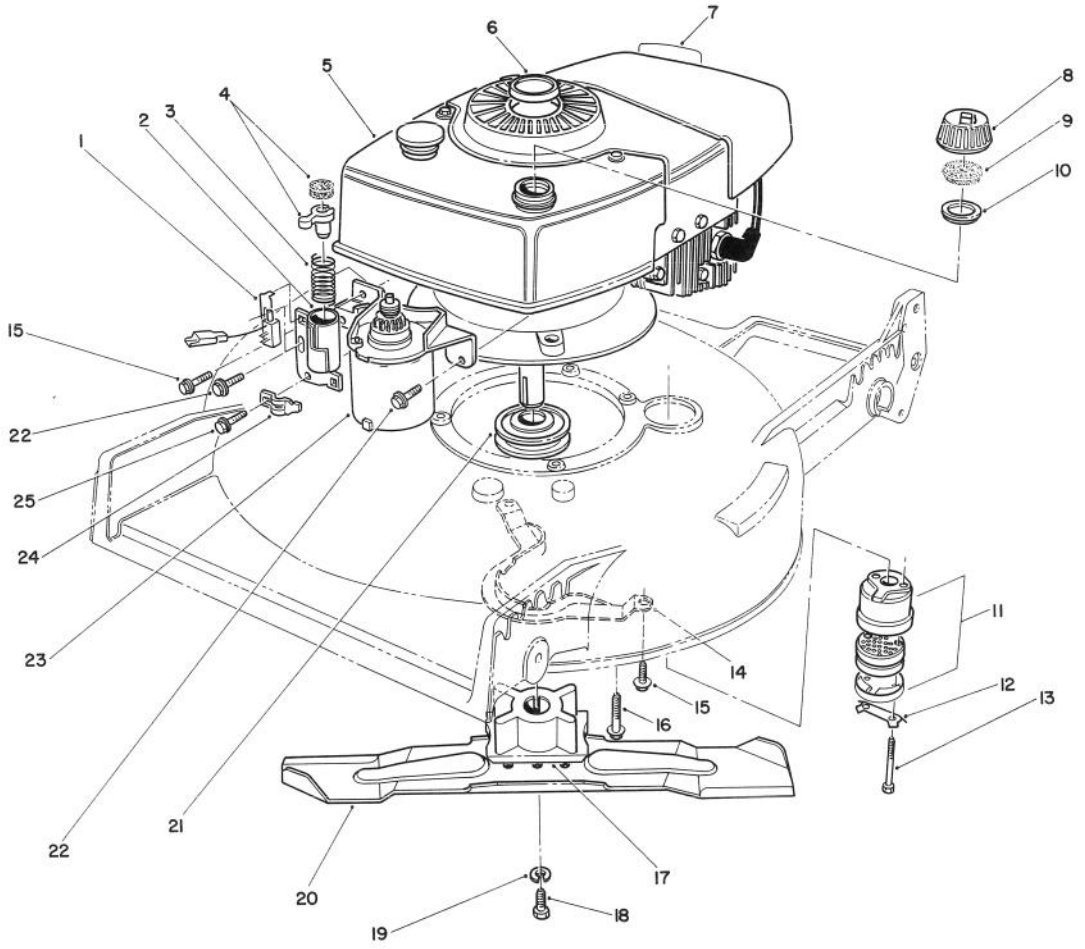

C-0419-89

ENGINE ASSEMBLY

Ref. No.	Part No.	Description	No. Used
1	47-6530	Switch — Push Button	1
2	46-5840	Tube Assembly	1
3	47-2180	Spring — Compression	1
4	47-7350	Plunger & Pad Assembly	1
5		Engine	1
6	38-1480	Plug — Button	1
7	37-1580	Decal — Maintenance	1
8	42-0682	Gas Cap (Incl. Ref. #9 & 10)	1
9	2210-144	Gasket — Gas Cap	1
10	2210-143	Baffle — Gas Cap	1
11	5-4769	Muffler Assembly (Incl. Ref. #12 & 13)	1
12	3-5094	Clip — Locking	1

Ref. No.	Part No.	Description	No. Used
13	321-20	Hex Hd. Capscrew	2
14	40-5720	Guide — Belt	1
15	49-2040	Screw — Thread Forming	2
16	11-0581	Screw — Thread Forming	3
17	62-7540	Retainer — Blade	1
18	26-0670	Screw — Blade	1
19	3253-22	Lockwasher	1
20	42-1000	Blade	1
21	62-7550	Pulley — Driver	1
22	12-3270	Screw — Thread Forming	2
23	49-4210	Starter Motor Assembly	1
24	46-6530	Clamp — Cable	1
25	12-5450	Screw — Self-Tapping	1

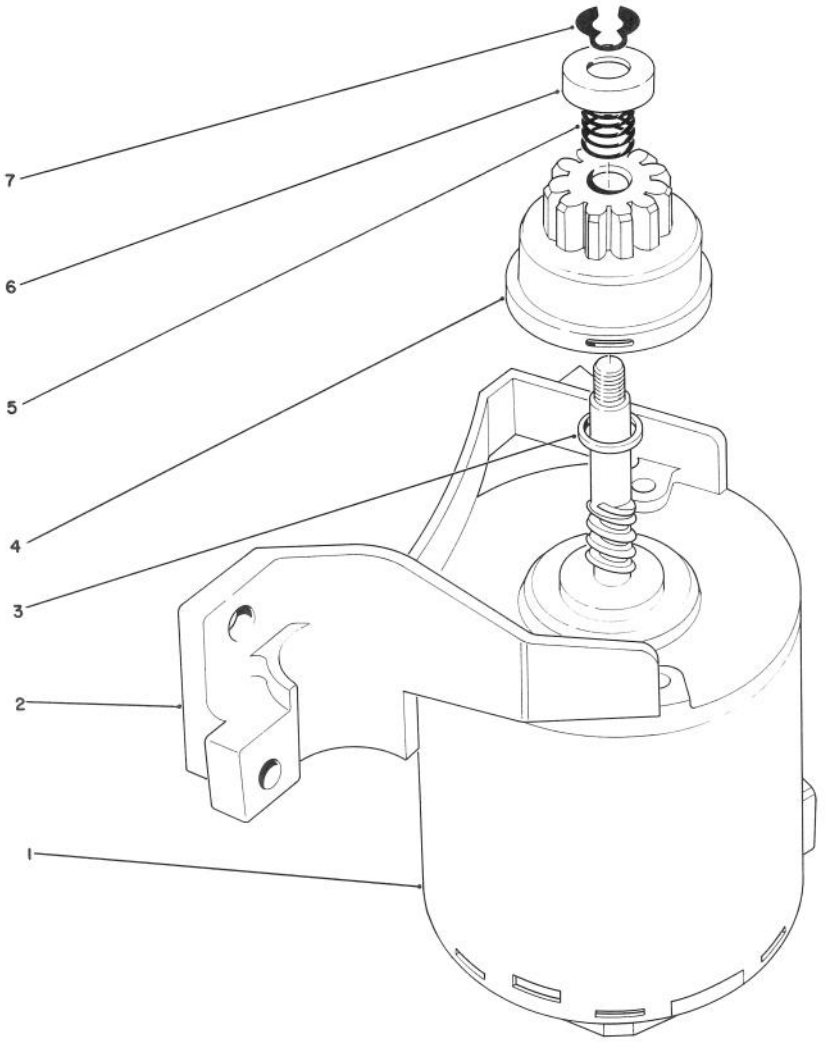

C-0259-89

STARTER ASSEMBLY

Ref. No.	Part No.	Description	No. Used
1	218-543	End Frame w/Brushes & Electrical Terminal	1
2	218-541	End Frame w/Bushing	1
3	23-9591	Spacer	1
4	43-4370	Pinion Assembly	1
5	44-0500	Spring - Compression	1
6	49-2170	Stop - Pinion	1
7	32151-47	Ring - Retaining External	1
*	49-4210	Starter Assembly (Incl. Ref. # 1-7)	1

* Not Illustrated

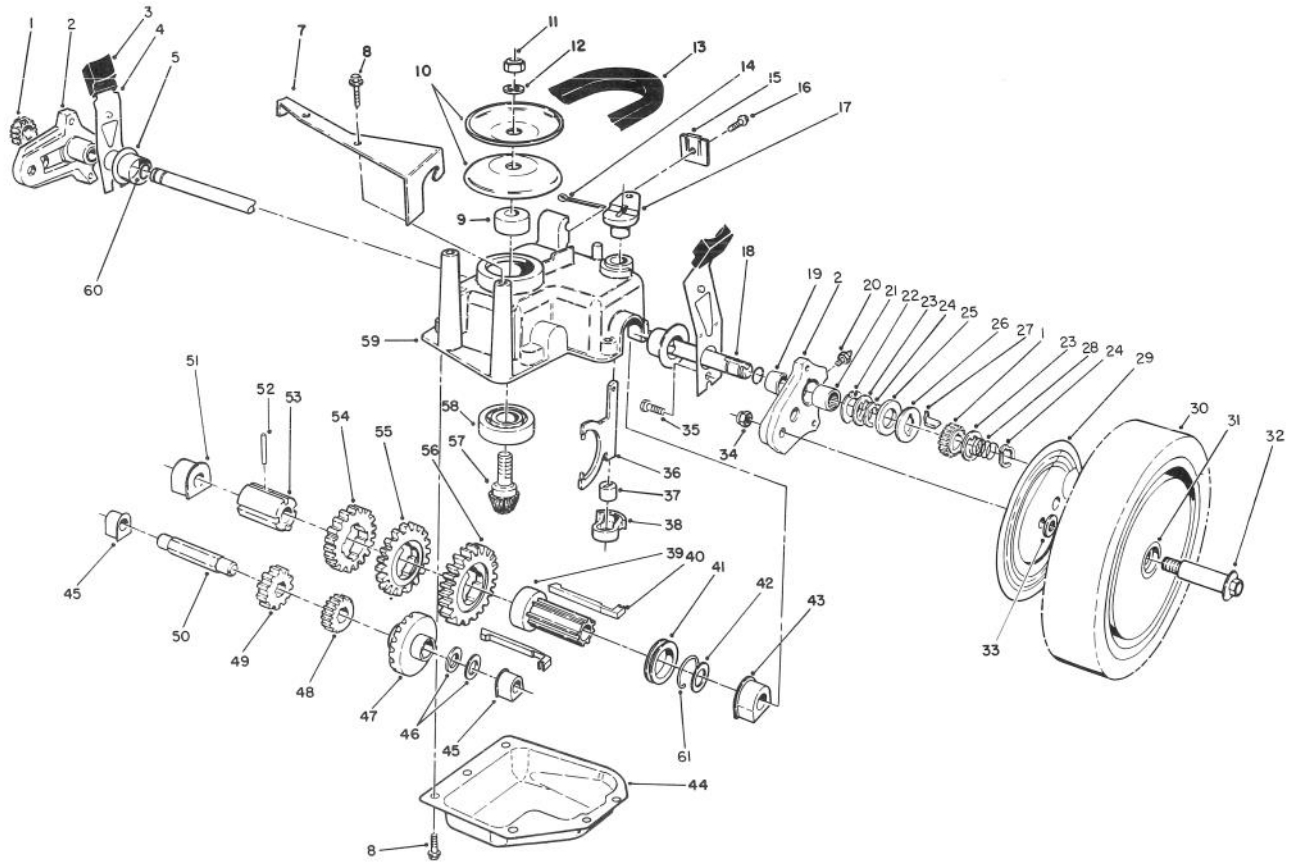

C-0371-89

GEAR CASE ASSEMBLY

Ref. No.	Part No.	Description	No. Used
1	65-4750	Pinion	2
2	63-8700	Pivot Arm Assembly (Incl. Ref # 19, 20, & 21)	2
3	25-7740	Knob - Arm	2
4	63-8720	Spring Arm Assembly	2
5	42-3520	End Cap	2
7	62-4320	Bracket - Belt Guide	1
8	49-2040	Screw - Self Tapping	8
9	62-6660	Spacer	1
10	60-8840	Pulley - Half	2
11	3296-5	Locknut	1
12	3256-24	Washer - Flat	1
13	62-3900	V-Belt	1
14	3272-10	Pin - Cotter	1
15	46-5610	Cable Clamp	1
16	32144-70	Screw - Thread Forming	1
17	60-8820	Lever - Shift	1
18	65-4770	Shaft - Output	1
19	47-2890	Bushing	2
20	302-56	Fitting - Grease	2
21	48-2060	Needle Bearing	2
22	65-4730	Thrust Washer	2
23	65-4740	Thrust Washer	4
24	65-2720	Ring - Retaining	4
25	65-4710	Ring - Friction	2

Ref. No.	Part No.	Description	No. Used
26	65-4760	Washer - Clutch	2
27	66-6050	Key - Rocker L.H.	1
*	66-6040	Key - Rocker R.H.	1
28	65-4720	Spring	2
29	63-5270	Cover - Wheel	2
30	11-9519	Wheel - Tire & Gear Ass'y (Incl. Ref. # 31)	2
31	27-6250	Bushing - Wheel	4
32	27-6231	Wheel Bolt	2
33	40-1940	Washer - Wheel Bolt	4
34	52-3620	Locknut	2
35	32144-85	Screw	2
36	60-8870	Yoke - Shift	1
37	29-9570	Bushing - Yoke	1
38	60-8810	Retainer - Shift Fork	1
39	**74-3620**	Sleeve - Shift Key	1
40	65-5230	Key - Shift	2
41	60-8760	Collar - Shift	1
42	36-4780	Washer - Thrust	1
43	60-8770	Bushing - Output Shaft	1
44	60-8730	Cover - Gear Case	1
45	60-8750	Bushing - Int. Shaft	2
46	36-4791	Washer - Thrust	2
47	55-3760	Gear - Pinion 15 Tooth	1
48	55-3780	Gear - Pinion 20 Tooth	1

* Not Illustrated

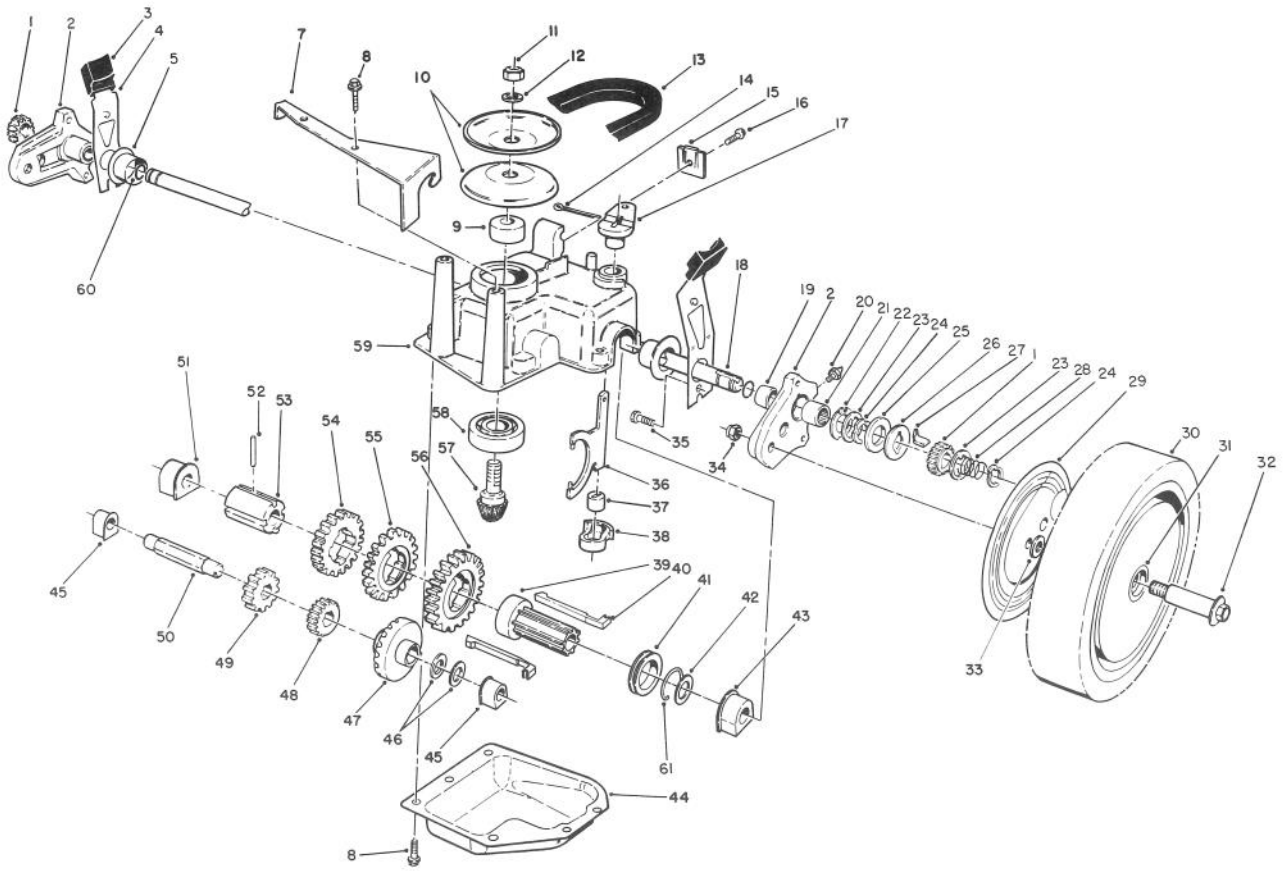

C-0371-89

GEAR CASE ASSEMBLY (CONTINUED)

Ref. No.	Part No.	Description	No. Used
49	55-3800	Gear - Pinion	1
50	60-8800	Shaft - Intermediate	1
51	60-8850	Bushing - Output Shaft	1
52	32121-120	Pin - Coil	1
53	60-8790	Sleeve - Gear	1
54	55-3810	Gear - 39 Tooth 3rd Gear	1
55	55-3790	Gear - 44 Tooth 2nd Gear	1

Ref. No.	Part No.	Description	No. Used
56	55-3770	Gear - 49 Tooth 1st Gear	1
57	60-8890	Pinion - Bevel	1
58	38-7820	Bearing - Ball	1
59	60-8710	Gear Case - Upper	1
60	237-153	O-Ring	2
61	65-5250	Clip - Spring	1
*	62-6673	Gear Case Assembly	1

* Not Illustrated

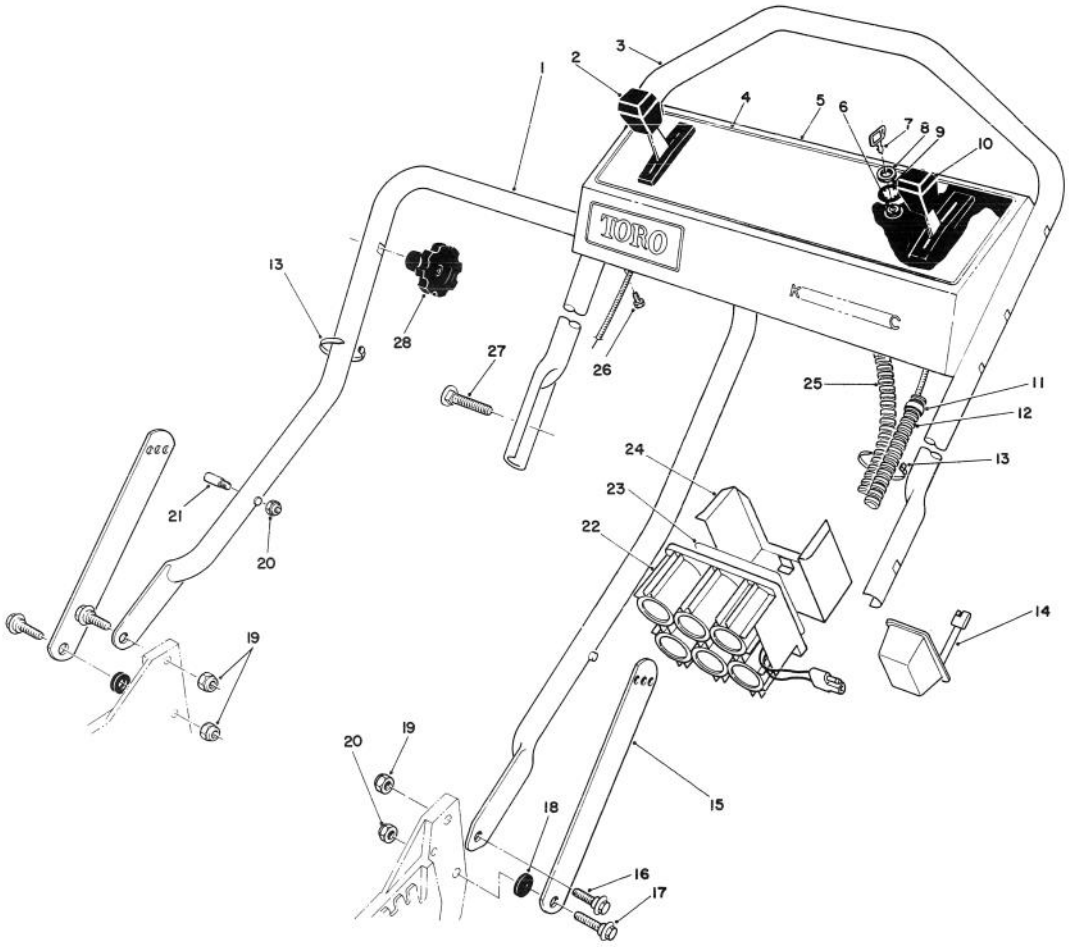

C-0420-89

HANDLE ASSEMBLY
(Serial No. 9000101-9005855) (9006400 & Up)

Ref. No.	Part No.	Description	No. Used
1	43-1361	Lower Handle Assembly	1
2	46-5431	Control — Ground Speed (Bend Type #1) (Sheath Lg. 42¼ inch, 107.3 cm.)	
		(Wire Lg. 2⅜ inch, 60 cm.)	1
3	46-5411	Handle — Upper	1
4	70-2650	Decal — Instruction Panel	1
5	13-6529	Panel — Control	1
6	46-5780	Switch — Starter (Incl. Ref. #7-9)	1
7	63-8360	Key	1
8	218-461	Hex Nut	1
9	3254-5	Lockwasher	1
10	67-9814	Control — Throttle (Sheath Lg. 55½ inch, 140.9 cm.)	
		(Wire Lg. 2⅛ inch, 5.4 cm.)	1

Ref. No.	Part No.	Description	No. Used
11	2412-50	Clip — Convoluted Tubing	4
12	46-6440	Cover — Control Cable	1
13	3290-378	Tie — Cable	4
14	6-9780	Battery Charger Assembly	1
15	43-1370	Latch — Handle	2
16	27-7211	Screw — Shoulder	2
17	27-7210	Screw — Shoulder	2
18	3-3287	Spacer — Handle Latch	2
19	3296-29	Locknut	3
20	3296-47	Locknut	3
21†	49-2750	Pin — Handle	2
22	55-7520	Battery Assembly	1
23	55-8190	Decal — Charging Instructions	1
24	55-8180	Retainer — Battery	1
25	46-5812	Harness — Wire	1
26	32104-76	Screw — Tapping	5
27	17-9421	Screw — Handle	2
28	19-4050	Knob — Handle Release	2

† Service Replacement Parts

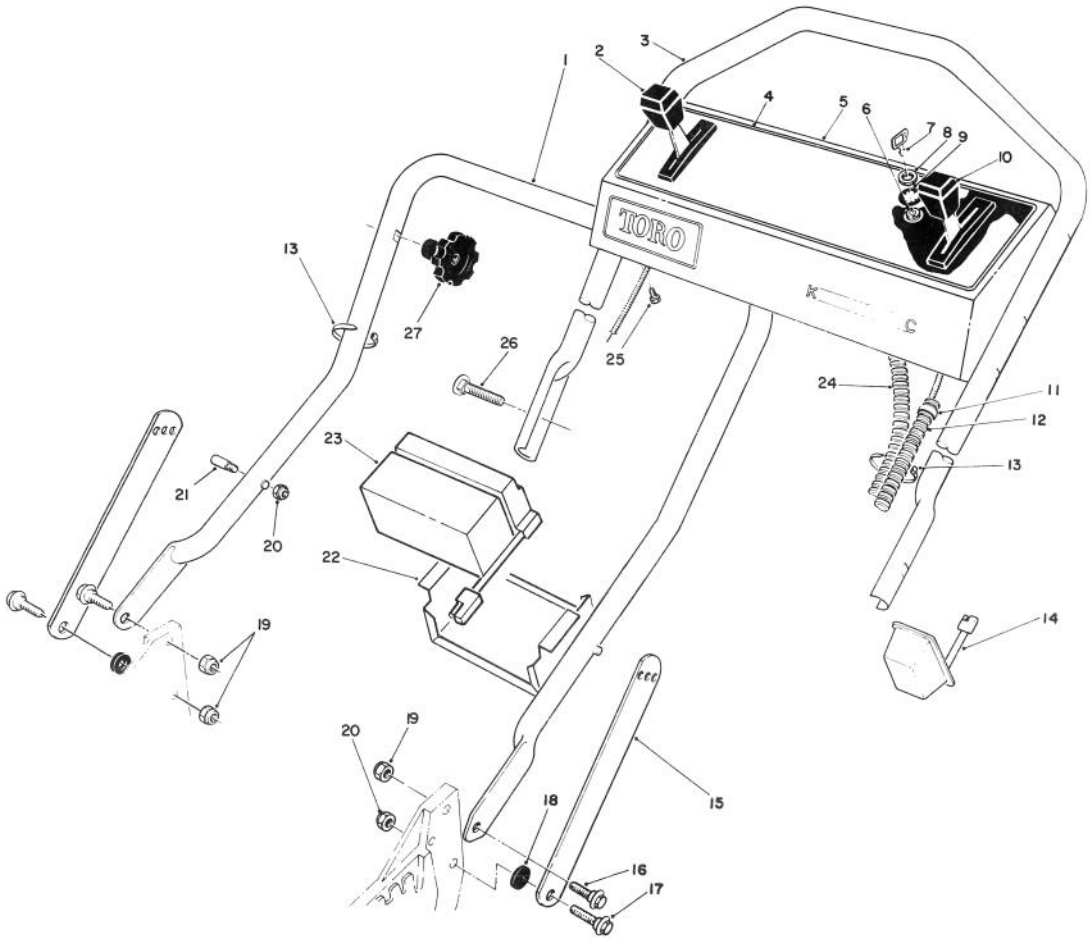

C-0421-89

HANDLE ASSEMBLY
(Serial No. 9005856-9006399)

Ref. No.	Part No.	Description	No. Used
1	43-1361	Lower Handle Assembly	1
2	46-5431	Control — Ground Speed (Bend Type #1) (Sheath Lg. 42¼ inch, 107.3 cm.) (Wire Lg. 2⅜ inch, 60 cm.)	1
3	46-5411	Handle — Upper	1
4	70-2650	Decal — Instruction Panel	1
5	13-6529	Panel — Control	1
6	46-5780	Switch — Starter (Incl. Ref. #7-9)	1
7	63-8360	Key (Set of 2)	1
8	218-461	Hex Nut	1
9	3254-5	Lockwasher	1
10	67-9814	Control — Throttle (Sheath Lg. 55½ inch, 140.9 cm.) (Wire Lg. 2⅛ inch, 5.4 cm.)	1

Ref. No.	Part No.	Description	No. Used
11	2412-50	Clip — Convoluted Tubing	4
12	46-6440	Cover — Control Cable	1
13	3290-378	Tie — Cable	4
14	6-9780	Battery Charger Assembly	1
15	43-1370	Latch — Handle	2
16	27-7211	Screw — Shoulder	2
17	27-7210	Screw — Shoulder	2
18	3-3287	Spacer — Handle Latch	2
19	3296-29	Locknut	3
20	3296-47	Locknut	3
21†	49-2750	Pin — Handle	2
22	63-8480	Retainer — Battery	1
23	63-8570	Battery	1
24	46-5812	Harness — Wire	1
25	32104-76	Screw — Tapping	5
26	17-9421	Screw — Handle	2
27	19-4050	Knob — Handle Release	2

† Service Replacement Parts

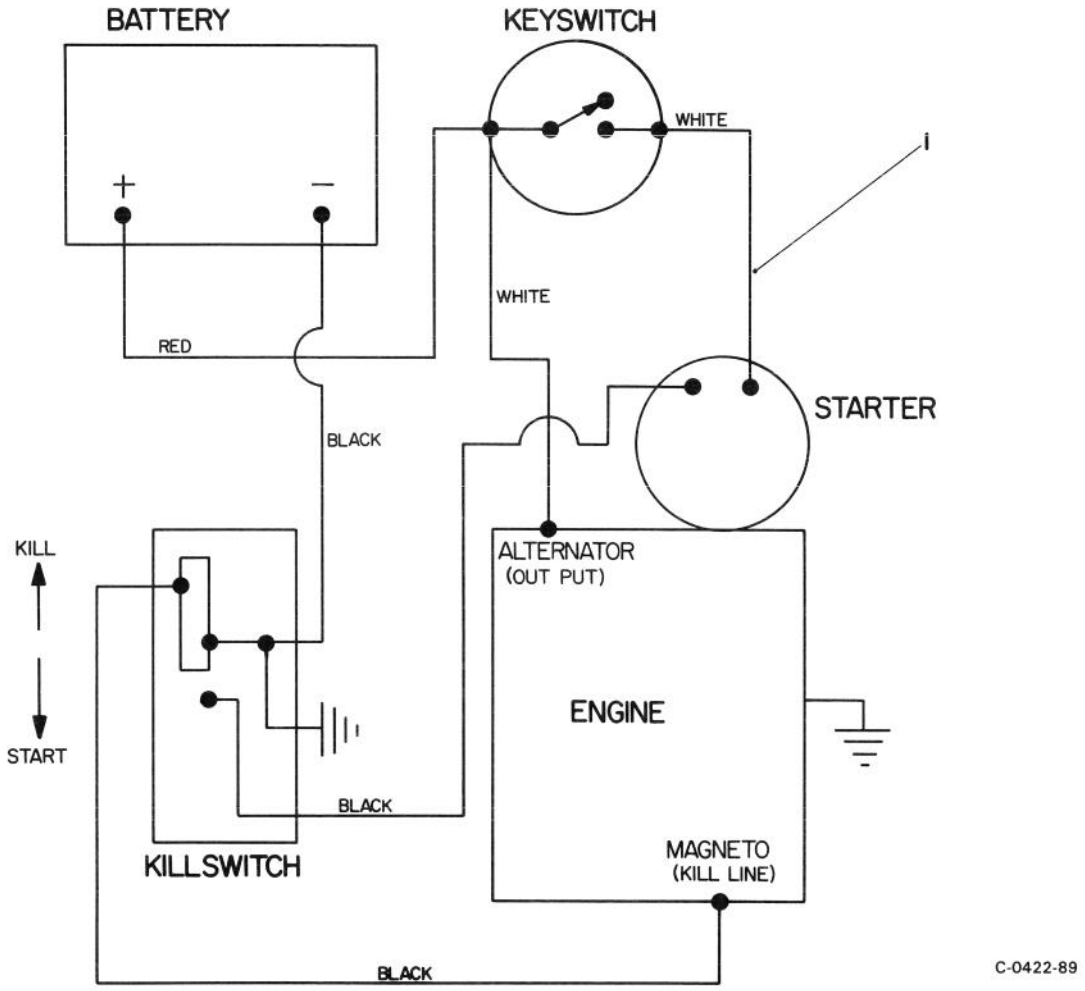

ELECTRICAL SCHEMATIC

Ref. No.	Part No.	Description	No. Used
1	46-5812	Harness — Wire	1

Ref. No.	Part No.	Description	No. Used

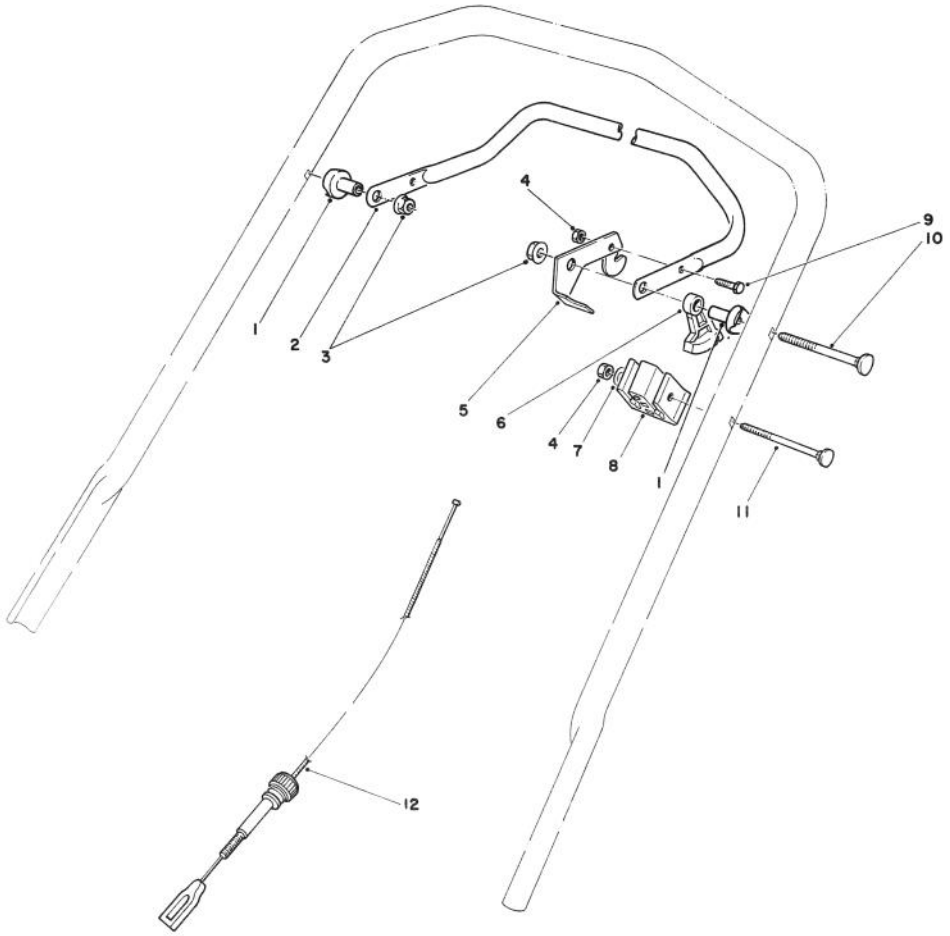

C-0423-89

TRACTION CONTROL ASSEMBLY

Ref. No.	Part No.	Description	No. Used
1	49-1630	Support — Spacer	2
2	52-7430	Control Bar	1
3	3296-58	Nut — Flange Lock	2
4	3296-42	Locknut	2
5	66-5350	Lever — Control	1
6	46-5520	Lever — Traction	1

Ref. No.	Part No.	Description	No. Used
7	3256-22	Washer	1
8	46-6980	Support — Cable	1
9	321-3	Hex Hd. Capscrew	1
10	17-9421	Screw — Handle	2
11	46-6434	Screw — Handle	1
12	46-5481	Cable — Traction	1

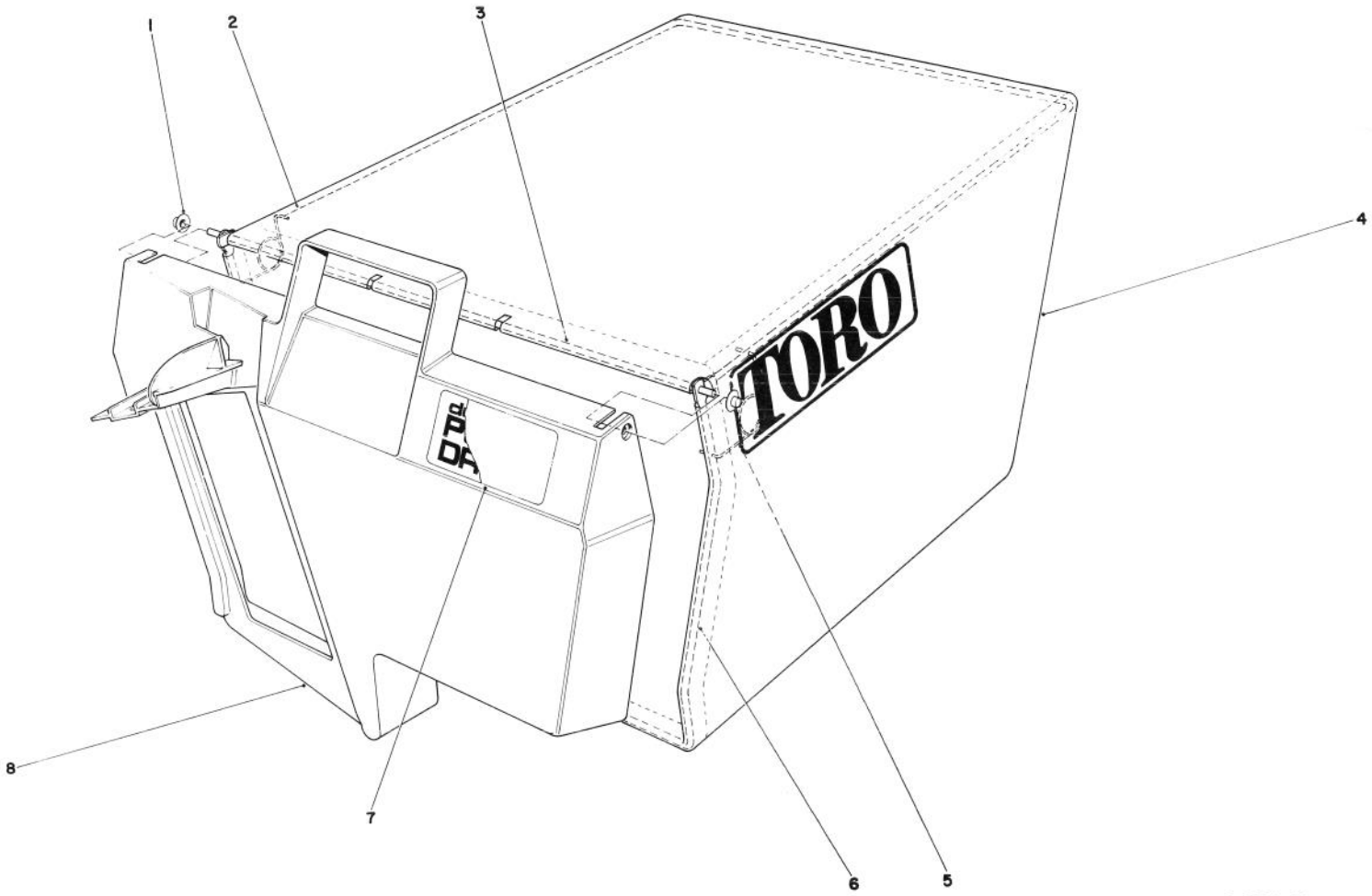

C-0331-89

GRASS BAG ASSEMBLY NO. 43-0018

Ref. No.	Part No.	Description	No. Used
1	3290-422	Nut - Push	2
2	42-4030	Bag Frame - Upper	1
3	33-4820	Hinge - Bag Door	1
4	8-2759	Bag - Grass	1

Ref. No.	Part No.	Description	No. Used
5	36-6910	Spring	2
6	42-4020	Frame - Bag	1
7	66-2150	Decal - Bag Door	1
8	37-1393	Door - Grass Bag	1

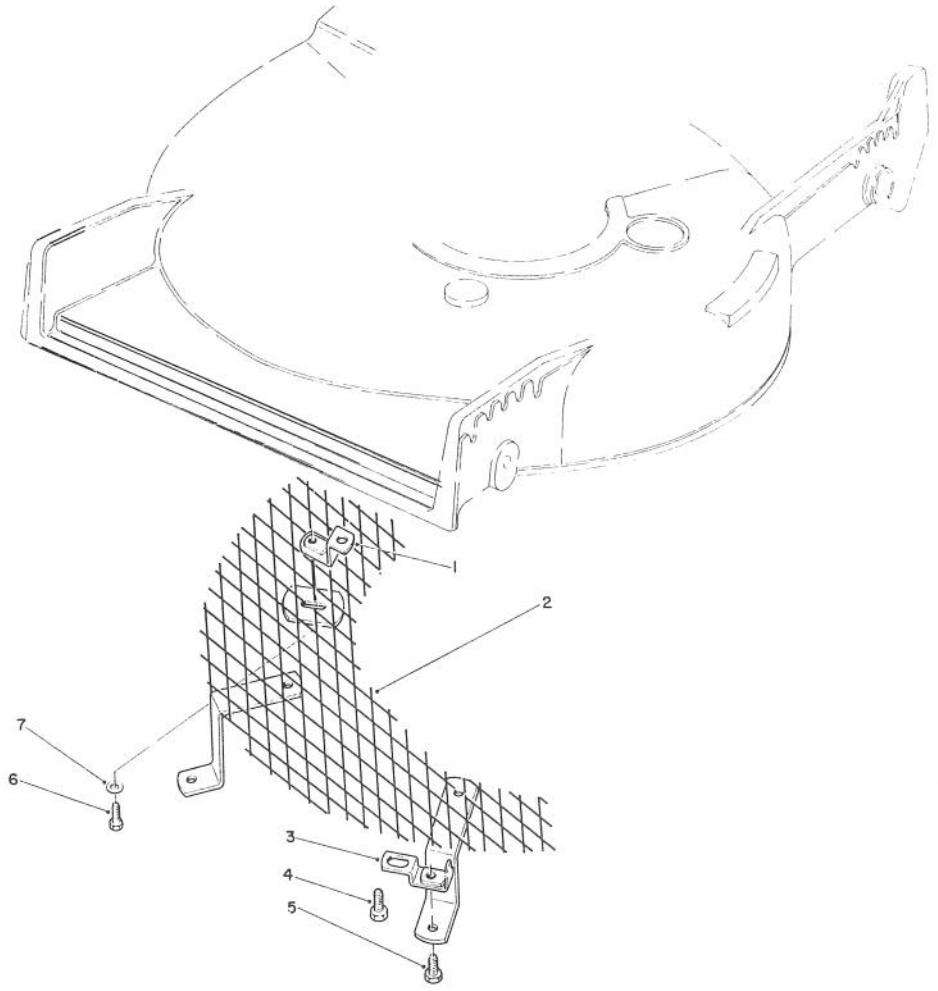

C-0302-89

LEAF SHREDDER KIT MODEL NO 59157 (OPTIONAL)

Ref. No.	Part No.	Description	No. Used
1	47-6260	Bracket	1
2	47-6230	Screen	1
3	46-4880	Bracket - Mounting	2
4	32144-11	Self Tapping Screw	3

Ref. No.	Part No.	Description	No. Used
5	321-3	Hex Hd. Capscrew	2
6	321-5	Hex Hd. Capscrew	1
7	3256-1	Washer	1

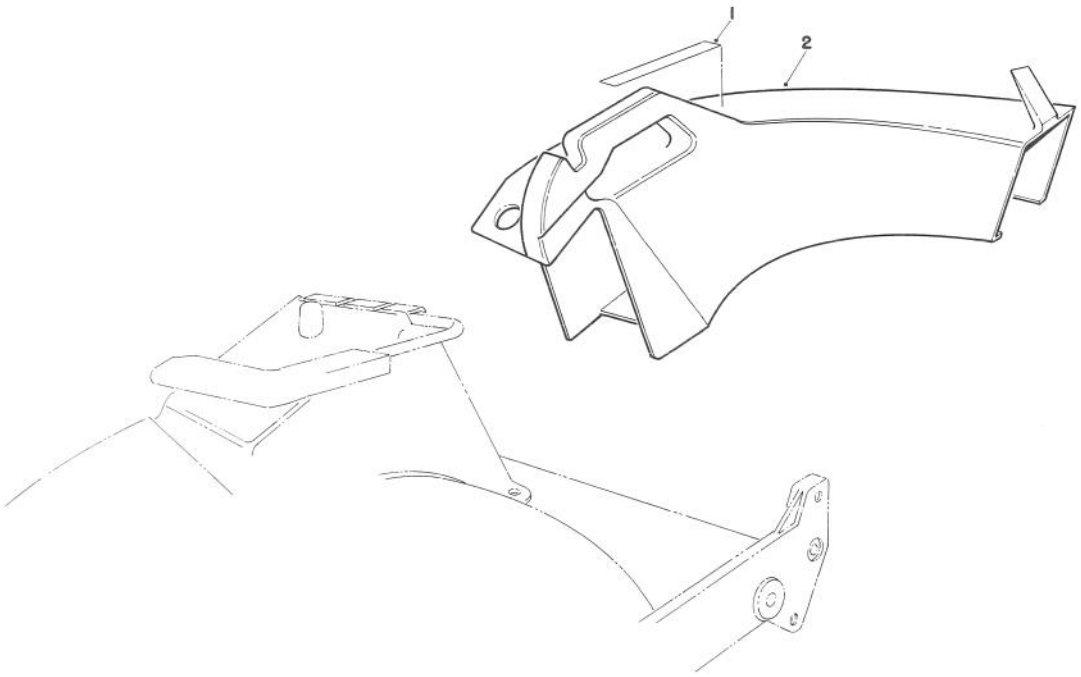

T-0716-89

SIDE DISCHARGE CHUTE MODEL NO 59168 (OPTIONAL)

Ref. No.	Part No.	Description	No. Used
1	39-9120	Decal - Caution	1
2	13-2239	Chute - Discharge (Incl Ref. # 1)	1

Ref. No.	Part No.	Description	No. Used

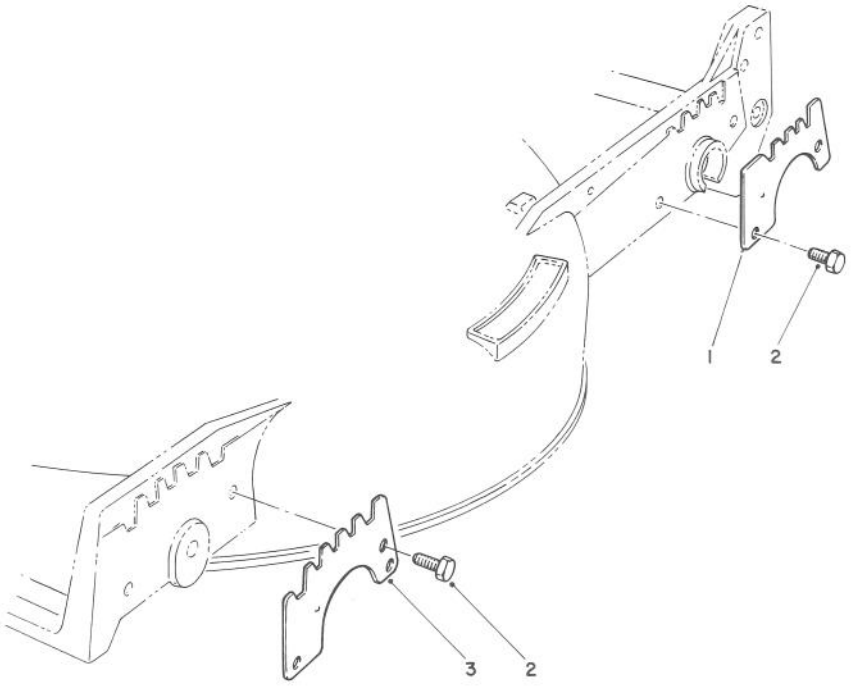

C-0332-89

WEAR PLATE MODEL NO. 49-4080 (OPTIONAL)

Ref. No.	Part No.	Description	No. Used
1	49-4070	Plate - Rear Wear	2
2	32104-17	Thread Forming Screw	8

Ref. No.	Part No.	Description	No. Used
3	43-5050	Plate - Wear Front	2

ENGINE TECUMSEH MODEL NO. TNT 100-10104F

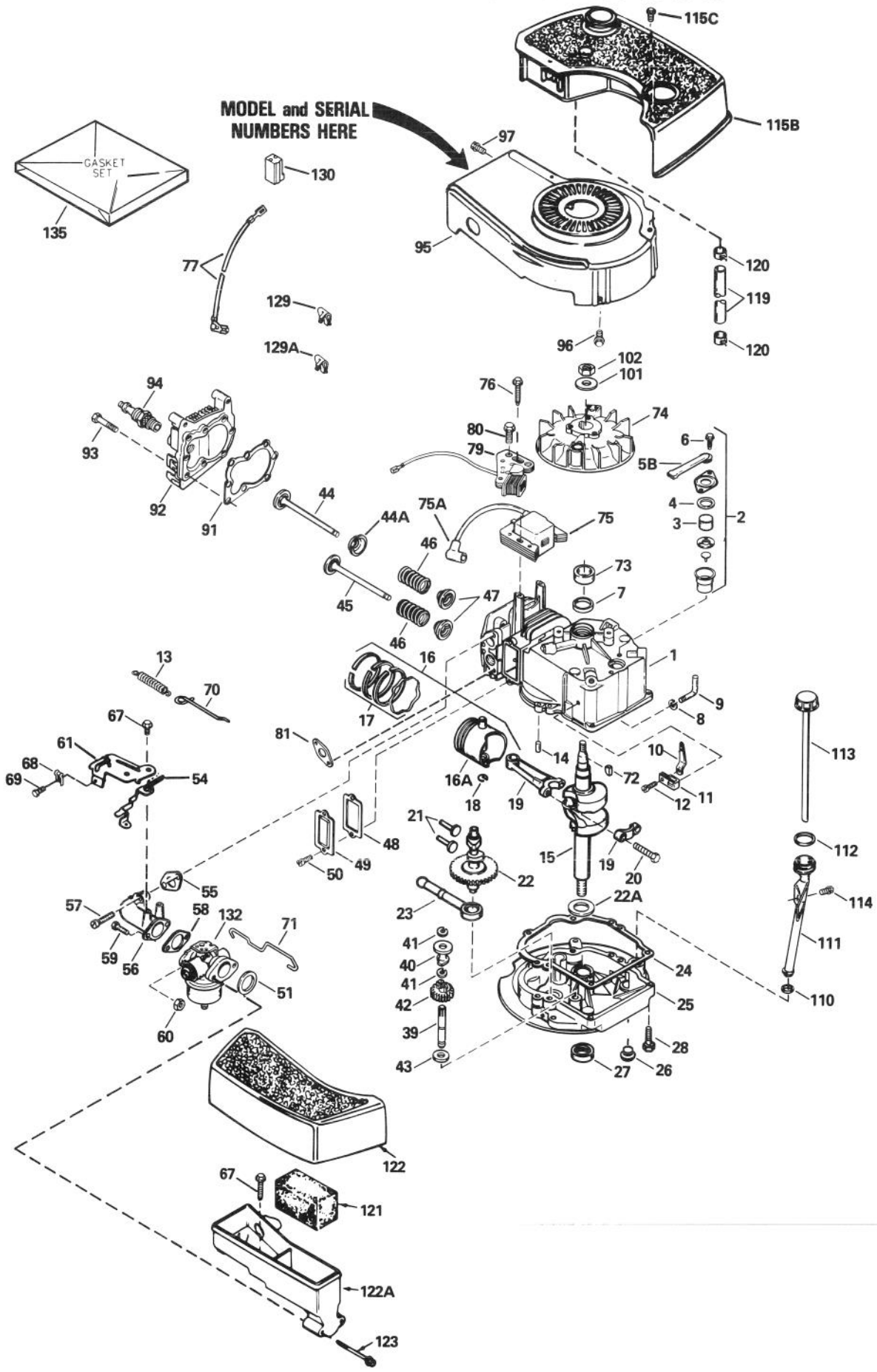

ENGINE TECUMSEH MODEL NO. TNT 100-10104F

Ref. No.	Part No.	Description	No. Used
1	34429A	Cylinder Assy. (Incl. Ref. #6 & 14)	1
2	34214A	Breather Assy. (Incl. Ref. #3-6 & 129)	1
3	33734	Element, Breather	1
4	*33735	Gasket, Breather	1
5B	33886	Tube, Breather	1
6	30200	Screw, Hex Washer Hd. Self-Tap	2
7	32600	Seal, Oil	1
8	28277	Washer, Flat	1
9	30589	Rod, Governor (Incl. Ref. #8)	1
10	32651	Lever, Governor	1
11	31335	Clamp, Governor Lever	1
12	650548	Screw, Hex Washer Hd.	1
13	33890	Spring, Extension	1
14	26727	Pin, Dowel	2
15	35482	Crankshaft Assy.	1
16	35544	Piston, Pin & Ring Assy. (STD.) (Incl. Ref. #16A, 17 & 18)	1
16	35545	Piston, Pin & Ring Assy. (.010 oversize) (Incl. Ref. #16A, 17 & 18)	1
16	35546	Piston, Pin & Ring Assy. (.020 oversize) (Incl. Ref. #16A, 17 & 18)	1
16A	35541	Piston & Pin Assy. (Std.) (Incl. Ref. #18)	1
16A	35542	Piston & Pin Assy. (.010 oversize) (Incl. Ref. #18)	1
16A	35543	Piston & Pin Assy. (.020 oversize) (Incl. Ref. #18)	1
17	35547	Ring Set, Piston (Std.)	1
17	35548	Ring Set, Piston (.010 oversize)	1
17	35549	Ring Set, Piston (.020 oversize)	1
18	20381	Ring, Piston Pin Retaining	1
19	30963B	Rod Assy., Connecting (Incl. Ref. #20)	1
20	32610A	Bolt, Connecting Rod	2
21	27241	Valve, Lifter	2
22	33553	Camshaft (Mech. Compression Release)	1
22A	32323	Washer, Thrust	1
23	29914	Pump Assy., Oil	1
24	*35261	Gasket, Mounting Flange	1
25	34311B	Flange, Mounting (Incl. Ref. #26, 27 & 39)	1
26	27244	Plug, Oil Drain	1
27	27897	Seal, Oil	1
28	650488	Screw, Hex Hd.	6
39	30574	Shaft, Governor	1
40	30588A	Spool, Governor	1
41	29193	Ring, Retaining	2
42	30591	Gear Assy., Governor (Incl. Ref. #43)	1
43	35479	Washer, Flat	1
44	29314B	Valve, Intake (Std.) (Incl. Ref. #47)	1
44	29315C	Valve, Intake (1/32" oversize) (Incl. Ref. #47)	1
44A	35390	Seal Assy., Intake Valve	1

Ref. No.	Part No.	Description	No. Used
45	29313C	Valve, Exhaust (Std.) (Incl. Ref. #47)	1
45	29315C	Valve, Exhaust (1/32" oversize) (Incl. Ref. #47)	1
46	31672	Spring, Valve	2
47	31673	Cap, Lower Valve Spring	2
48	*27234A	Gasket, Valve Spring Box	1
49	32755	Cover, Valve Spring Box	1
50	650128	Screw, Hex Hd.	2
51	*33051	Gasket, Air Cleaner	1
54	34310	Lever, RPM Adjusting	1
55	*34690A	Gasket, Intake Pipe	1
56	33004A	Pipe, Intake (Incl. Ref. #55)	1
57	650451	Screw, Hex Hd.	2
58	*31688A	Gasket, Carburetor	1
59	6201	Screw, Hex Hd.	2
60	29752	Nut & Lockwasher	2
61	33889A	Bracket Assy., Control (Incl. Ref. #54 & 67)	1
67	650804	Screw, Hex Washer Hd. Shoulder, Self-Tap	2
68	27793	Clip, Conduit	1
69	28942	Screw, Hex Washer Hd.	1
70	33151	Link, Governor Spring	1
71	34336	Link, Throttle	1
72	611004	Key, Flywheel	1
73	34080	Spacer, Flywheel Key	1
74	611050	Flywheel	1
75	34443A	Solid State Assy.	1
75A	610118	Cover, Spark Plug	1
76	650814	Screw, Torx Hex Washer Hd.	2
77	35020	Wire, Ground	1
79	34990	Coil, Alternator	1
80	650767	Screw, Hex Washer Hd.	2
81	*30081A	Gasket, Exhaust	1
91	*33015A	Gasket, Cylinder Head	1
92	34342	Head, Cylinder	1
93	6021A	Screw, Hex Flange Hd.	8
94	35395	Spark Plug, Resistor (Champion RJ-19LM or equivalent)	1
95	33891B	Housing, Blower	1
96	650561	Screw, Hex Washer Hd.	2
97	30200	Screw, Hex Washer Hd. Self-Tap	2
101	650815	Washer, Belleville	1
102	650816	Nut, Flywheel	1
110	34265	Gasket, Fill Tube	1
111	35581	Tube, Oil Fill	1
112	35499	"O" Ring	1
113	35582	Dipstick, Oil Fill	1
114	650562	Screw, Hex Washer Hd.	1
115B	33904B	Tank Assy. (Incl. Ref. #118 & 120)	1
115C	28763	Screw, Hex Washer Hd.	2
119	30705	Line, Fuel	1
120	26460	Clamp, Fuel Line	2
121	33896	Filter, Air Cleaner	1
122	33897	Cover, Air Cleaner	1
122A	33895	Body, Air Cleaner	1
123	650762	Screw, Fil. Hd.	2
129	29443	Clip, Spring	1
129A	33887	Clip, Breather	1
130	34977	Connector, Body	1
132	632050A	Carburetor (Incl. Ref. #58)	1
135	33906B	Gasket Set (Incl. items marked *)	1

* Indicates parts included in Gasket Set, Ref. #135.

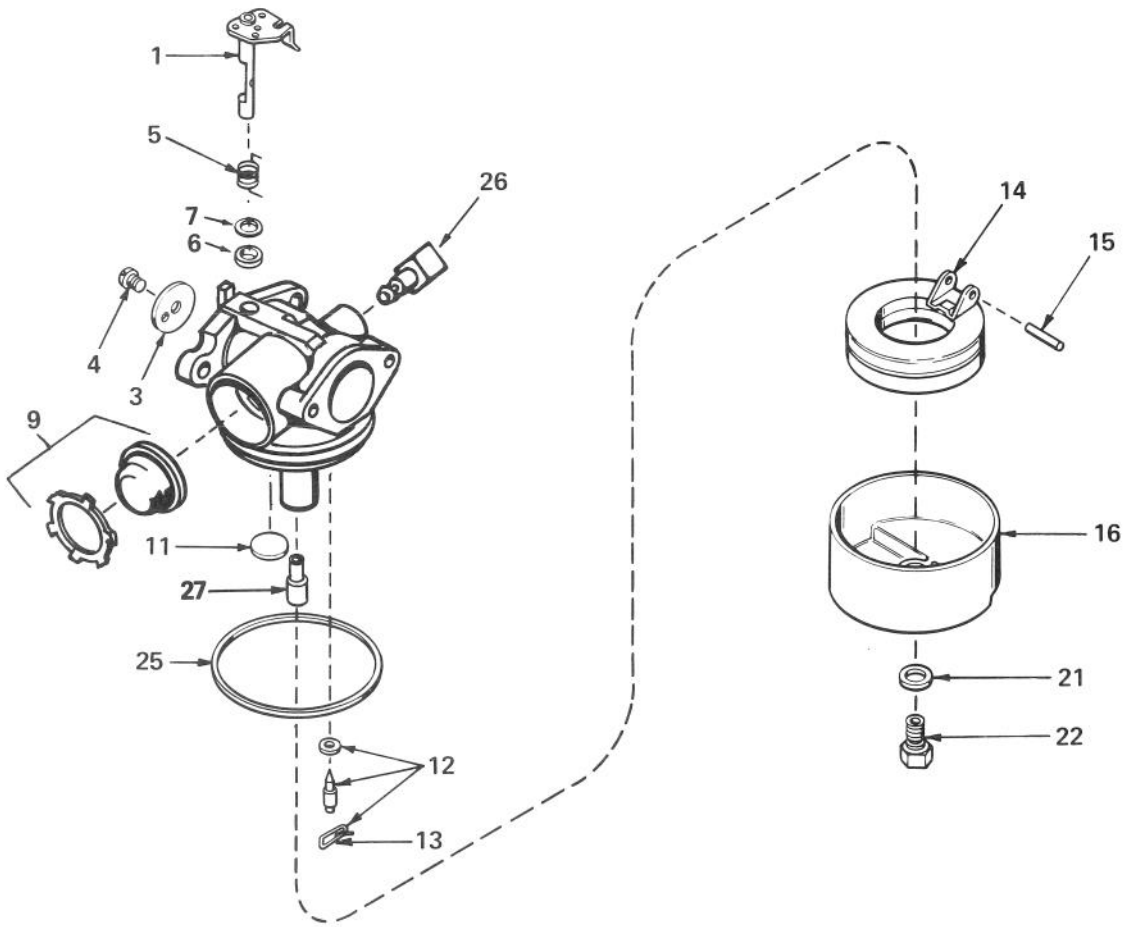

CARBURETOR NO. 632050A

Ref. No.	Part No.	Description	No. Used
1	631615	Shaft & Lever Assy., Throttle	1
3	631616	Shutter, Throttle	1
4	650506	Screw, Throttle Shutter	1
5	631767	Spring, Throttle Return	1
6	631971	Seal, Dust	1
7	631184	Washer, Flat	1
9	632047	Bulb & Retainer, Primer	1
11	631027	Plug, Welch	1
12	631021	Inlet Needle, Seat & Clip Assy. (Incl. Ref. #13)	1

Ref. No.	Part No.	Description	No. Used
13	631022	Clip, Inlet Needle	1
14	632019	Float, Carburetor	1
15	631024	Shaft, Float	1
16	631700	Bowl, Float	1
21	631334	Gasket, Bowl-to-body	1
22	631935	Nut, Float bowl	1
25	631028	Gasket, Bowl-to-body	1
26	631807	Fitting, Fuel Inlet	1
27	632158	Spacer	1

PRODUCT CHANGES

In an effort to make improvements available to TORO owners as quickly as possible, minor changes are incorporated into Toro's products from time to time that do not become immediately shown in the Parts Catalog. If such a change apparently has been made in your unit, which is not reflected in your manual, see your TORO Distributor or his Authorized TORO Service Dealer for information and part numbers.

IDENTIFICATION AND ORDERING

MODEL AND SERIAL NUMBERS

The mower has two identification numbers: a model number and a serial number. The two numbers are stamped on a decal which is located on the mower housing between the rear wheels. In any correspondence concerning the mower, supply model and serial numbers to assure that correct information and replacement parts are obtained.

To order replacement parts from an Authorized TORO Service Dealer, supply the following information:

1. Model and serial number of the mower.
2. Part number, description, and quantity of part(s) desired.

Note: Do not order by reference number if a parts catalog is being used; use the PART NUMBER.

The Toro Promise

A TWO YEAR LIMITED WARRANTY

The Toro Company promises to repair your TORO Product if defective in materials or workmanship. The following time periods from the date of purchase apply:

Residential Product ..... 2 Years
Residential Products Used Commercially... 45 Days

The costs of parts and labor are included, but the customer pays the transportation costs. Just return any residential product to an Authorized TORO Service Dealer or TORO Distributor.

Should you feel your TORO Product is defective and wish to rely on The Toro Promise, the following procedure is recommended:

1. Contact any Authorized TORO Service Dealer, TORO Master Service Dealer, or TORO Distributor (the Yellow Pages of your telephone directory is a good reference source).
2. He will either instruct you to return the product to him or recommend another Authorized TORO Service outlet which might be more convenient.
3. Bring the product along with your original sales slip, or other evidence of purchase date, to the service dealer.
4. The servicing dealer will inspect the unit, advise you whether the product is defective and, if so, make all repairs necessary to correct the defect without extra charge to you.

If for any reason you are dissatisfied with the dealer's analysis of the defect or the service performed, you may contact us.

Write:

TORO Consumer Service Department
8111 Lyndale Avenue South
Minneapolis, Minnesota 55420

The above remedy of product defects through repair by an Authorized TORO Service Dealer is the purchaser's sole remedy for any defect.

THERE IS NO OTHER EXPRESS WARRANTY. ALL IMPLIED WARRANTIES OF MERCHANTABILITY AND FITNESS FOR USE ARE LIMITED TO THE DURATION OF THE EXPRESS WARRANTY.

Some states do not allow limitations on how long an implied warranty lasts, so the above limitation may not apply to you.

This warranty applies only to parts or components which are defective and does not cover repairs necessary due to normal wear, misuse, accidents, or lack of proper maintenance. Regular, routine maintenance of the unit to keep it in proper operating condition is the responsibility of the owner.

All warranty repairs reimbursable under The Toro Promise must be performed by an Authorized TORO Service Dealer using Toro approved replacement parts.

Repairs or attemped repairs by anyone other than an Authorized TORO Service Account are not reimbursable under The Toro Promise. In addition, these unauthorized repair attempts may result in additional malfunctions, the correction of which is not covered by warranty.

THE TORO COMPANY IS NOT LIABLE FOR INDIRECT, INCIDENTAL OR CONSEQUENTIAL DAMAGES IN CONNECTION WITH THE USE OF THE PRODUCT INCLUDING ANY COST OR EXPENSE OF PROVIDING SUBSTITUTE EQUIPMENT OR SERVICE DURING PERIODS OF MALFUNCTION OR NON-USE.

Some states do not allow the exclusion or limitation of incidental or consequential damages, so the above limitation or exclusion may not apply to you.

This warranty gives you specific legal rights, and you may also have other rights which vary from state to state.

COUNTRIES OTHER THAN THE UNITED STATES OR CANADA

Customers who have purchased TORO products exported from the United States or Canada should contact their TORO Distributor (Dealer) to obtain guarantee policies for your country, province or state. If for any reason you are dissatisfied with your Distributor's service or have difficulty obtaining guarantee information, contact the TORO importer. If all other remedies fail, you may contact us at The Toro Company.

Compliance with Radio Interference Regulations Certified.
Certifie Conforme au Reglement sur le Brouillage Radioelectrique.

Litho U.S.A.

AL-891917-R

MAINTENANCE RECORD

Date								