Form No. 3355–228 Rev A

# Out Front Brush Kit

## Greensmaster 800, 1000 & Flex 21

**Model No. 04119**

## Installation Instructions

**1.** Position the machine on a level surface. Stop engine.

**Note: Steps 2 thru 6 pertain to the Greensmaster Flex 21 only. Steps 7 thru 12 pertain to the Greensmaster 800/1000 only. All remaining steps pertain to all.**

**2.** Remove the capscrew and washer securing the left end of the front frame to the tab on top of the cutting unit (Fig. 1).

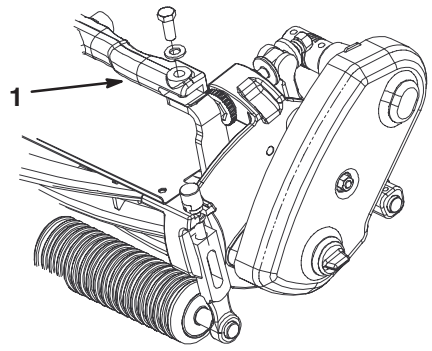


Flex 21

**Figure 1**

1. Front frame

**3.** Mount a L.H. brush bracket to the front frame and tab with the M10–1.5 x 30 capscrew and washer previously removed (Fig. 2).

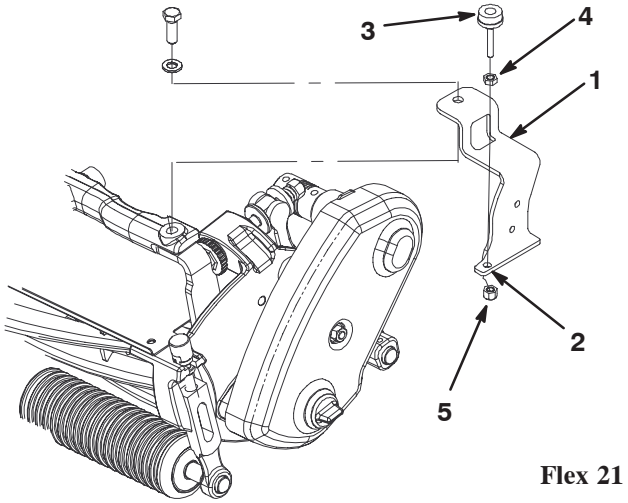


Flex 21

**Figure 2**

1. Brush bracket (L.H.)
2. Hole
3. Level adjustment screw
4. Jam nut
5. Locknut

**Note:** The bracket is to be positioned so the hole in the bottom is to the front. The bracket should fit over the end of the front frame and tab.

**4.** Loosely mount the level adjustment screw to the brush bracket with a jam nut and a lock nut (Fig. 2).

**5.** Mount a brush spring and brush rod to the brush bracket with (2) 1/4–20 x 1–1/2" lg. capscrews, spacers and lock nuts (Fig. 3).

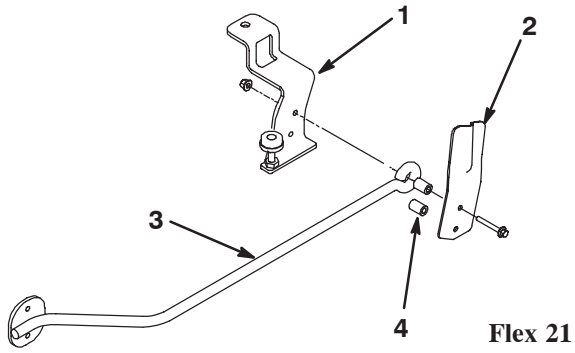


Flex 21

**Figure 3**

1. Brush bracket (L.H.)
2. Brush spring
3. Brush rod
4. Spacers (2)

**6.** Repeat the procedure on the opposite side of the machine.

**7.** Remove (2) capscrews and washers securing grass catcher mounting rod to left sideplate (Fig. 4).

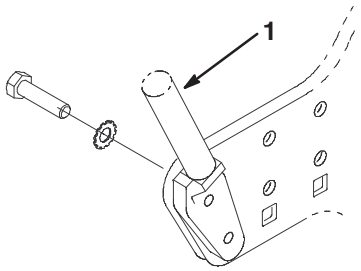


GR 800 & 100

**Figure 4**

1. Grass catcher mounting rod

**8.** Resecure the grass catcher mounting rod to the left sideplate with (2) new fully threaded 5/16–18 x 1–1/2" lg. capscrews and the (2) washers that were previously removed (Fig. 5).

© 2003 by The Toro Company
8111 Lyndale Avenue South
Bloomington, MN 55420-1196



All Rights Reserved
Printed in the USA

**9.** Insert the L.H. brush bracket onto the capscrews and secure with (2) locknuts (Fig. 5).

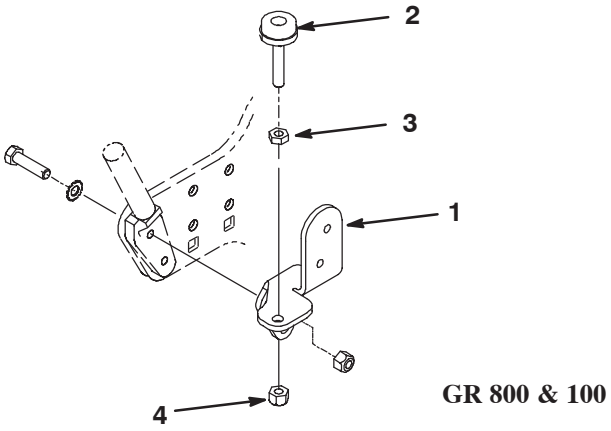


**Figure 5**

1. Brush bracket (L.H.)
2. Level adjustment screw
3. Jam nut
4. Lock nut

**Note:** The bracket is to be positioned so the hole in the bottom is to the front.

**10.** Loosely mount the level adjustment screw to the brush bracket with a jam nut and a lock nut (Fig. 5).

**11.** Mount a brush spring and brush rod to the brush bracket with (2) 1/4–20 x 1–1/2" lg. capscrews, spacers and lock nuts (Fig. 6).

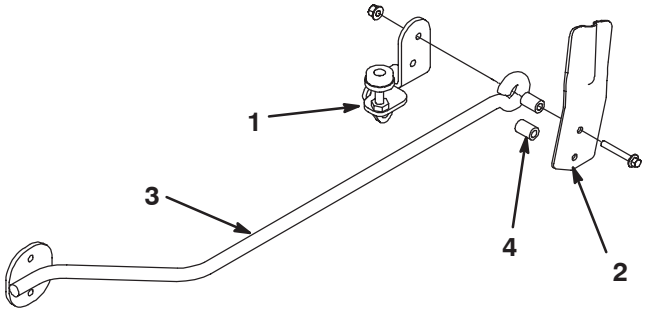


**Figure 6**

1. Brush bracket (L.H.)
2. Brush spring
3. Brush rod
4. Spacers (2)

**12.** Repeat the procedure on the opposite side of the machine.

**13.** Mount a brush tab to each end of the brush with (2) capscrews, washers and locknuts. Position the tabs as shown in figure 7. Use the outer sets of holes for installation on a Flex 21 or GR 1000. Use the inner holes for the GR 800. Cut each end of brush off at the outer holes for use on a GR 800.

**14.** Secure a brush rod mounting bracket to each brush tab with (2) M6–1 x 20 flange head screws and flange nuts (Fig. 7).

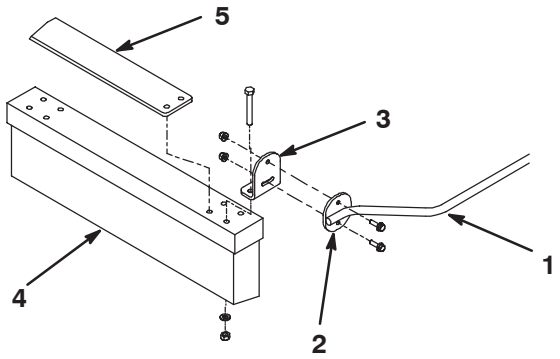


**Figure 7**

1. Brush rod
2. Brush rod mounting bracket
3. Brush tab
4. Brush
5. Brush weight (Optional)

**15.** Adjust the operating height of the brush and level it by rotating the adjustment screws to the desired position.

**16.** Rotate the brush upward and secure the rods into the brush springs when the brush is not required.