FORM NO. 3313-897

TORO®

MODEL NO. 20631-9000001 & UP

PARTS CATALOG

21" S.P. REAR BAGGER

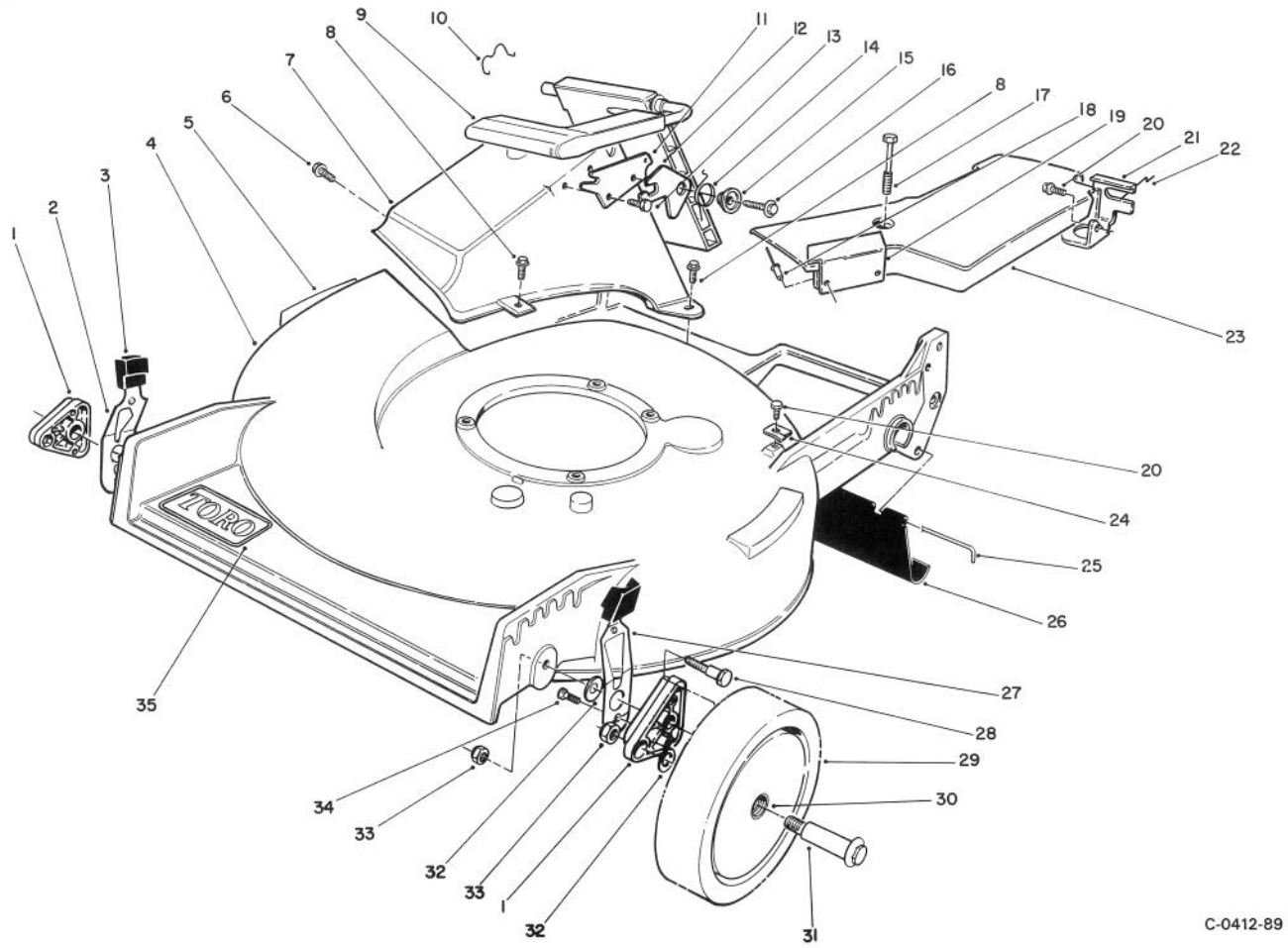

HOUSING ASSEMBLY

Ref. No.	Part No.	Description	No. Used
1	66-0580	Arm — Pivot	2
2	71-0560	Spring Arm Assembly — R.H.	1
3	25-7740	Knob — Spring Arm	2
4	13-4649	Housing (Incl. Ref. #1 & 35)	1
5	39-5770	Decal Danger	1
6	46-6810	Screw — Self-Tapping Hex Washer Hd.	1
7	46-3500	Tunnel — Discharge	1
8	46-6811	Screw — Self-Tapping Hex Washer Hd.	3
9	51-0201	Discharge Door Assembly	1
10	47-5840	Retainer — Door	1
11	23-1040	Plate — Latch	1
12	42-4010	Latch — Door	1
13	46-8090	Screw — Self-Tapping Hex Washer Hd.	1
14	33-4860	Spring — Torsion	1
15	43-4840	Spacer — Latch	1
16	46-8091	Screw — Self-Tapping Hex Washer Hd.	1
17	37-7260	Capscrew — Special	2
18	3295-35	Rivet	2
19	38-8730	Shield — Heat	1
20	32144-70	Screw Self-Tapping Hex Washer Hd.	2
21	62-3940	Bracket — Traction Adjustment	1
22	46-7030	Retainer — Cable	1
23	52-7404	Belt Cover Assembly (Incl. Ref. #18 & 19)	1
24	62-3720	Clamp — Cable	1
25	33-3203	Rod — Shield	1

©The TORO Company — 1989

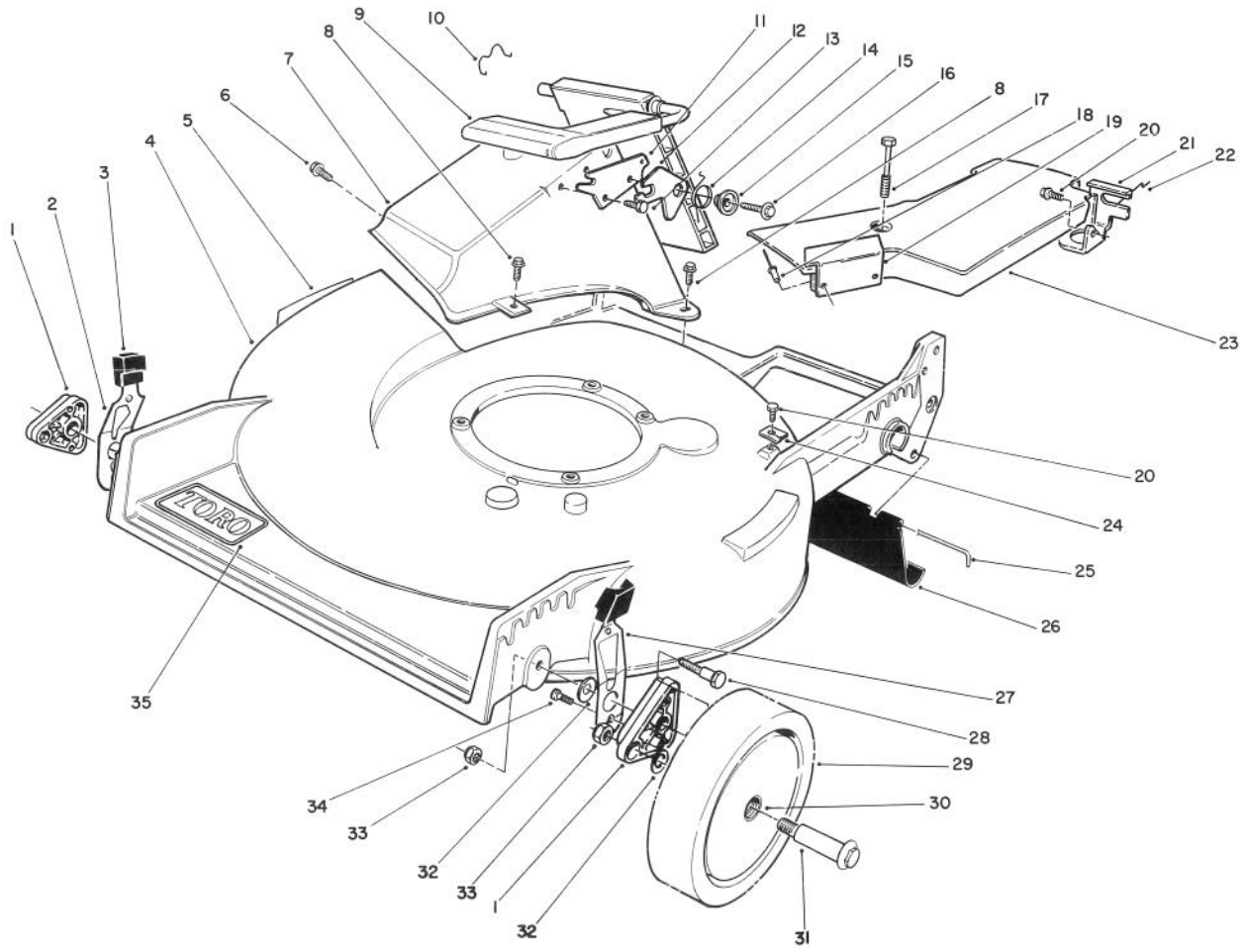

C-0412-89

HOUSING ASSEMBLY (Continued)

Ref. No.	Part No.	Description	No. Used
26	44-0580	Shield — Rear	1
27	71-0570	Spring Arm Assembly — L.H.	1
28	66-0560	Screw — Pivot	2
29	11-9509	Wheel & Tire Assembly (Incl. Ref. #30)	2
30	27-6250	Bushing	4

Ref. No.	Part No.	Description	No. Used
31	27-6231	Bolt — Wheel	2
32	40-1940	Washer — Wheel	4
33	52-3620	Locknut	4
34	32144-85	Screw — Self-Tapping	2
35	71-0600	Decal — Toro	1

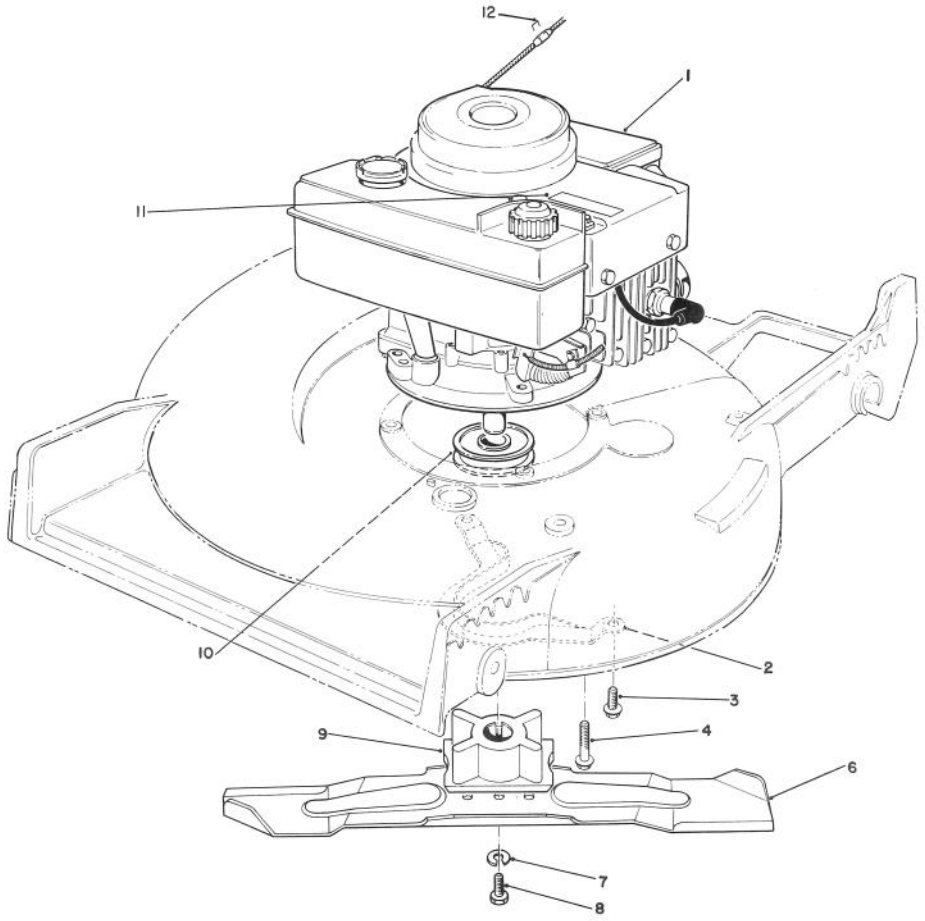

C-0413-89

ENGINE ASSEMBLY

Ref. No.	Part No.	Description	No. Used
1		Engine	1
2	40-5720	Guide — Belt	1
3	49-2040	Screw — Thread Forming	2
4	11-0581	Screw — Thread Forming	3
6	42-1000	Blade — 21″	1

Ref. No.	Part No.	Description	No. Used
7	3253-22	Lockwasher	1
8	26-0670	Screw — Blade	1
9	62-7540	Retainer — Blade	1
10	62-7550	Pulley — Driver	1
11	70-2190	Decal — Engine	1
12†		Staple	1

† Obtain Locally

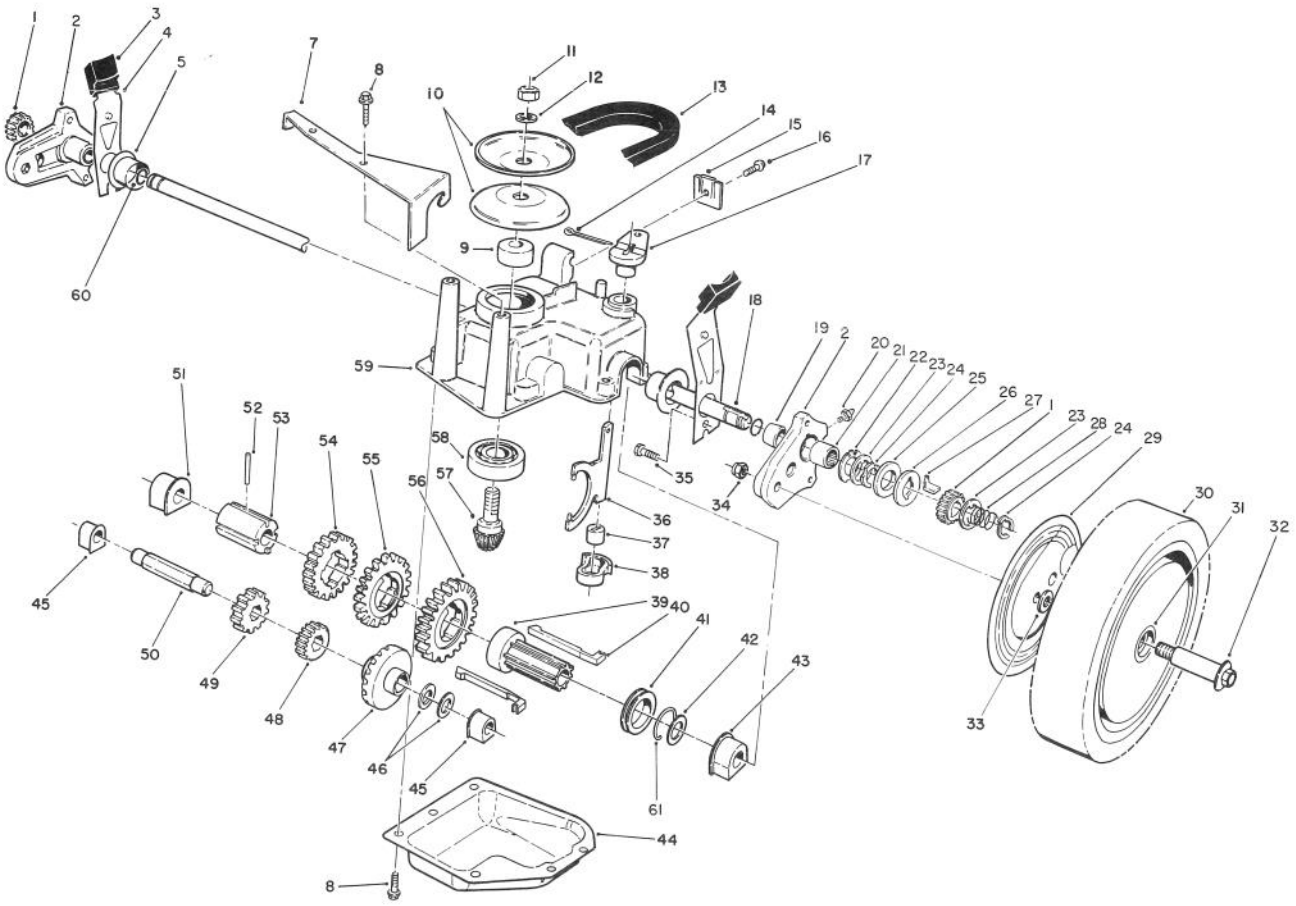

C-0333-89

GEAR CASE ASSEMBLY

Ref. No.	Part No.	Description	No. Used
1	65-4750	Pinion	2
2	63-8700	Pivot Arm Assembly (Incl. Ref. #19, 20, 21)	2
3	25-7740	Knob — Arm	2
4	63-8720	Spring Arm Assembly	2
5	42-3520	End Cap	2
7	62-4320	Bracket — Belt Guide	1
8	49-2040	Screw — Self-Tapping	8
9	62-6660	Spacer	1
10	60-8840	Pulley — Half	2
11	3296-5	Nut — Lock	1
12	3256-24	Washer — Flat	1
13	62-3900	V-Belt	1
14	3272-10	Pin — Cotter	1
15	46-5610	Cable Clamp	1
16	32144-70	Screw — Thread Forming	1
17	60-8820	Lever — Shift	1
18	65-4770	Shaft — Output	1
19	47-2890	Bushing	2
20	302-56	Fitting — Grease	2
21	48-2060	Needle Bearing	2
22	65-4730	Thrust Washer, Inner	2

Ref. No.	Part No.	Description	No. Used
23	65-4740	Thrust Washer, Inner	4
24	65-2720	Retaining Ring	4
25	65-4710	Friction Ring	2
26	65-4760	Washer — Clutch	2
27	66-6050	Key — Rocker L.H.	1
*	66-6040	Key — Rocker R.H.	1
28	65-4720	Spring	2
29	63-5270	Cover — Wheel	2
30	51-2740	Wheel — Tire & Gear Assy. (Incl. Ref. #31)	2
31	27-2650	Bushing — Wheel	4
32	27-6231	Wheel Bolt	2
33	40-1940	Washer — Wheel Bolt	4
34	52-3620	Nut — Lock	2
35	32144-85	Screw	2
36	60-8870	Yoke — Shift	1
37	29-9570	Bushing — Yoke	1
38	60-8810	Retainer — Shift Fork	1
39	74-3620	Sleeve — Shift Key	1
40	60-8740	Key — Shift	2
41	60-8760	Collar — Shift	1

* Not Illustrated

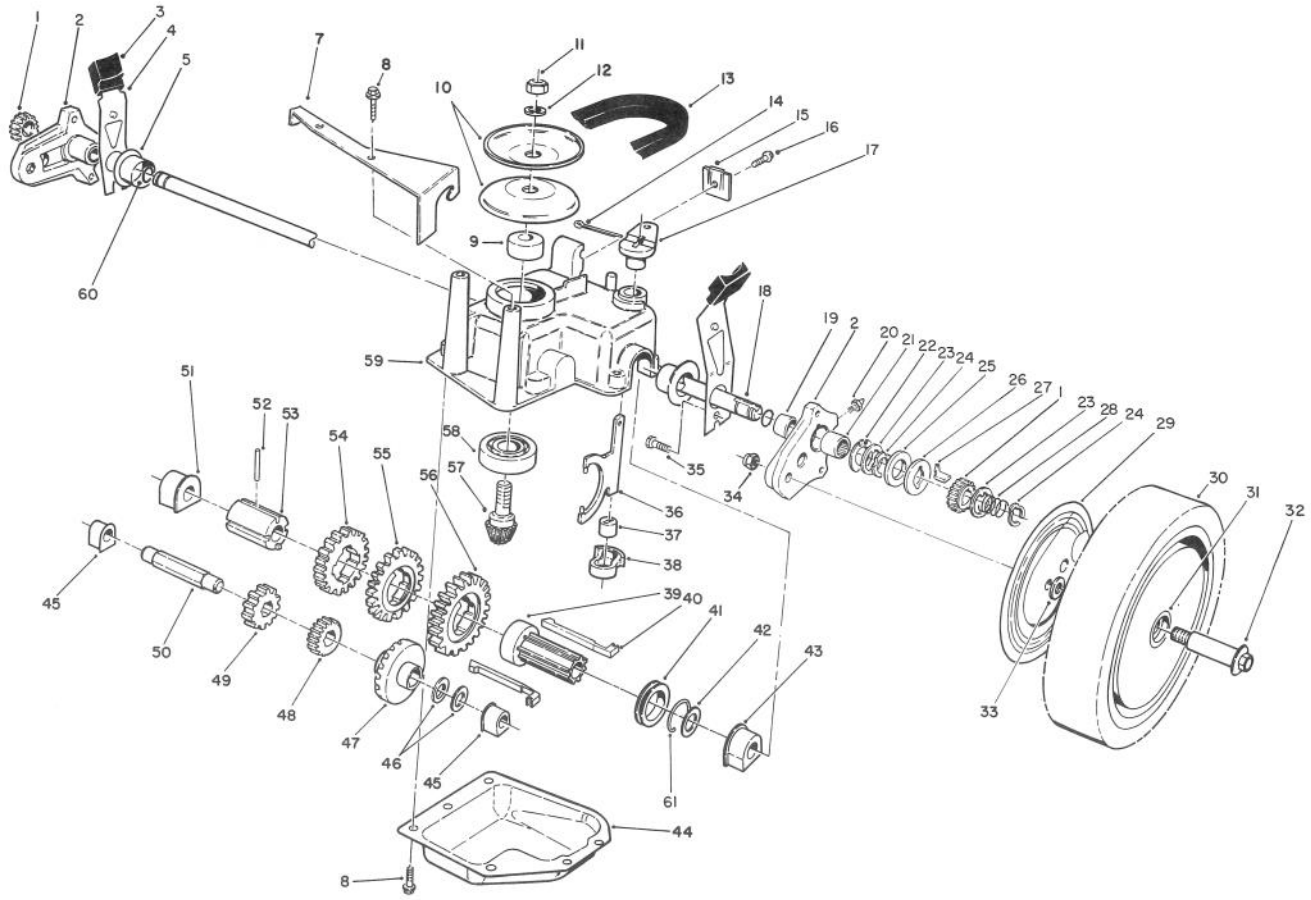

C-0333-89

GEAR CASE ASSEMBLY (Continued)

Ref. No.	Part No.	Description	No. Used
42	36-4780	Washer — Thrust	1
43	60-8770	Bushing — Output Shaft	1
44	60-8730	Cover — Gear Case	1
45	60-8750	Bushing — Int. Shaft	2
46	36-4791	Washer — Thrust	2
47	55-3760	Gear — Pinion 15 Tooth	1
48	55-3780	Gear — Pinion 20 Tooth	1
49	55-3800	Gear — Pinion	1
50	60-8800	Shaft — Intermediate	1
51	60-8850	Bushing — Output Shaft	1
52	32121-120	Pin — Coil	1

Ref. No.	Part No.	Description	No. Used
53	60-8790	Sleeve — Gear	1
54	55-3810	Gear — 39 Tooth	1
55	55-3790	Gear — 44 Tooth	1
56	55-3770	Gear — 49 Tooth	1
57	60-8890	Pinion — Bevel	1
58	38-7820	Bearing — Ball	1
59	60-8710	Case — Gear Upper	1
60	237-153	O-Ring	2
61	65-5250	Clip — Spring	1
*	62-6673	Gear Case Assembly Complete	1

* Not Illustrated

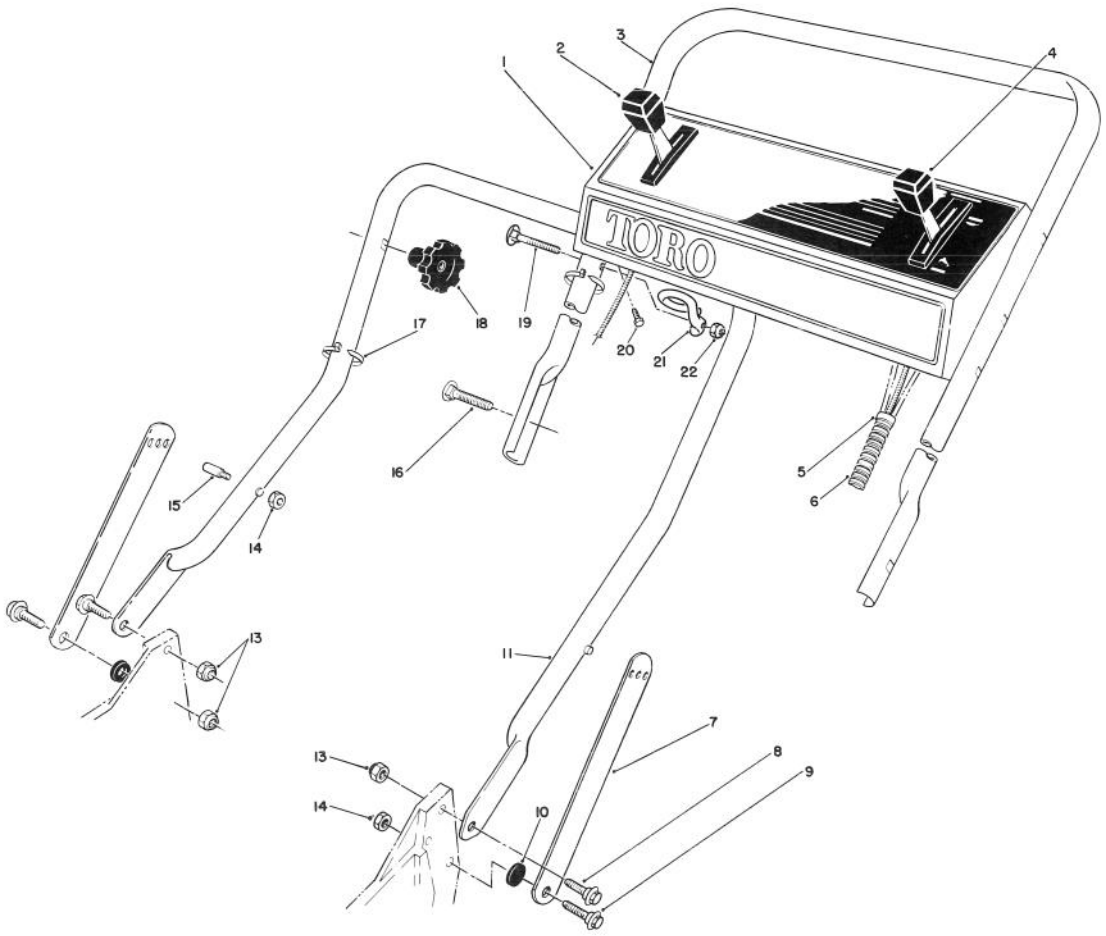

C-0414-89

HANDLE ASSEMBLY

Ref. No.	Part No.	Description	No. Used
1	70-7100	Panel — Control	1
2	46-5431	Control — Ground Speed (Bend Type #1) (Sheath Lg. 42¼ inch) (Wire Lg. 2½ inch)	1
3	49-4234	Handle — Upper	1
4	46-5448	Control — Throttle (Bend Type #1) (Sheath Lg. 55½ inch) (Wire Lg. 2¼ inch)	1
5	2412-50	Clip — Convoluted Tubing	4
6	46-6440	Cover — Control Cables	1
7	43-1370	Latch — Handle	2
8	27-7211	Screw — Shoulder	2

Ref. No.	Part No.	Description	No. Used
9	27-7210	Screw — Shoulder	2
10	3-3287	Spacer	2
11	43-1361	Lower Handle Assembly	1
13	3296-29	Locknut	3
14	3296-47	Locknut	3
15	49-2750	Pin — Handle	2
16	17-9421	Screw — Handle	2
17	3290-378	Cable Tie	2
18	19-4050	Knob — Handle Release	2
19	46-6433	Screw — Handle	1
20	32104-76	Screw — Self-Tap Slotted	5
21	46-8080	Guide — Rope	1
22	3296-42	Locknut	1

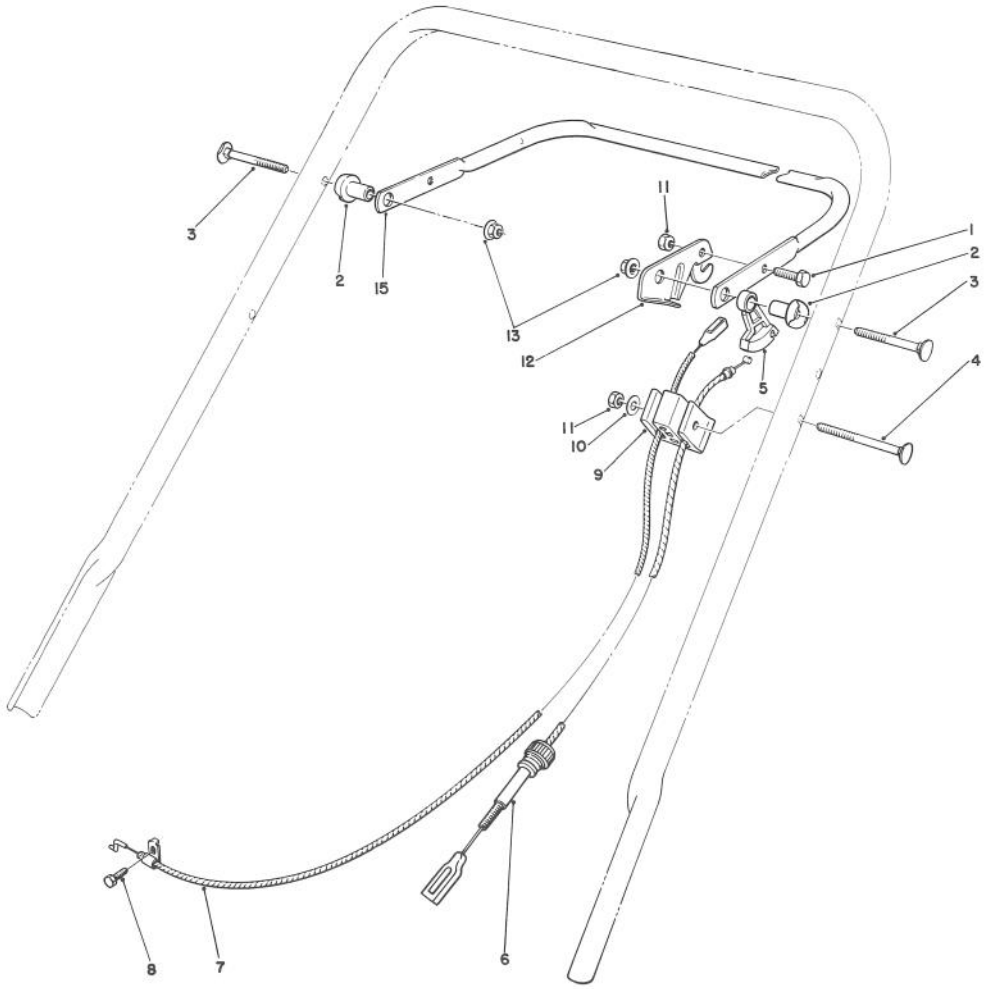

C-0330-89

TRACTION CONTROL ASSEMBLY

Ref. No.	Part No.	Description	No. Used
1	321-3	Capscrew	2
2	49-1630	Support — Spacer	2
3	17-9421	Screw — Handle	2
4	46-6434	Screw — Handle	1
5	46-5520	Lever — Traction	1
6	46-5481	Cable — Traction	1
7	46-8011	Cable — Brake	1

Ref. No.	Part No.	Description	No. Used
8	2210-250	Capscrew	1
9	46-6980	Support — Cable	1
10	3256-22	Washer — Flat	1
11	3296-42	Locknut	2
12	66-5350	Lever — Control	1
13	3296-58	Locknut	2
15	71-3080	Bar — Control	1

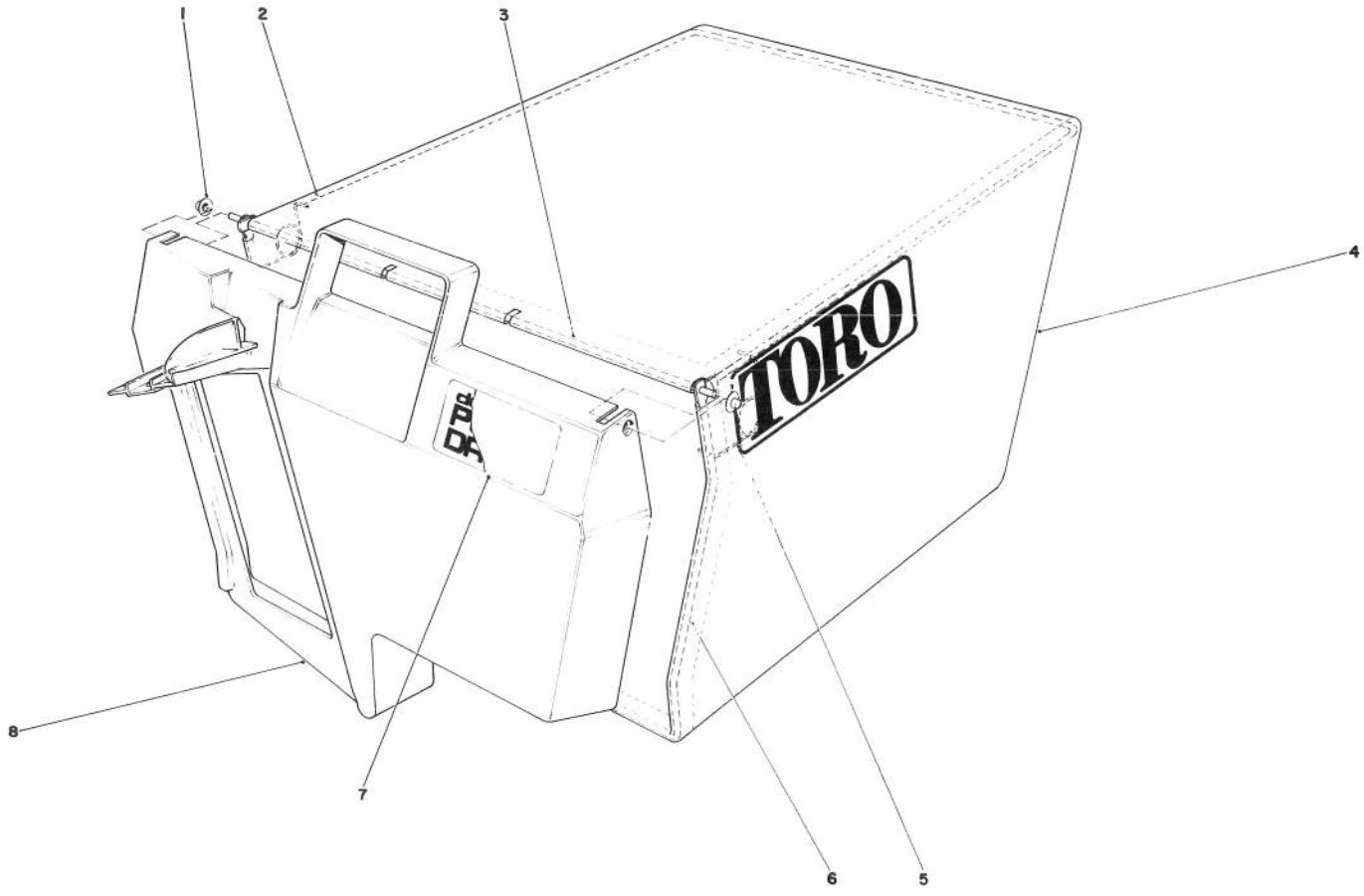

C-0331-89

GRASS BAG ASSEMBLY NO. 11-0189

Ref. No.	Part No.	Description	No. Used
1	3290-422	Push Nut	2
2	42-4030	Bag Frame Upper	1
3	33-4820	Hinge Bag Door	1
4	8-2759	Grass Bag	1

Ref. No.	Part No.	Description	No. Used
5	36-6910	Spring	2
6	42-4020	Frame Bag	1
7	40-2240	Decal — Bag Door	1
8	37-1393	Door Grass Bag	1

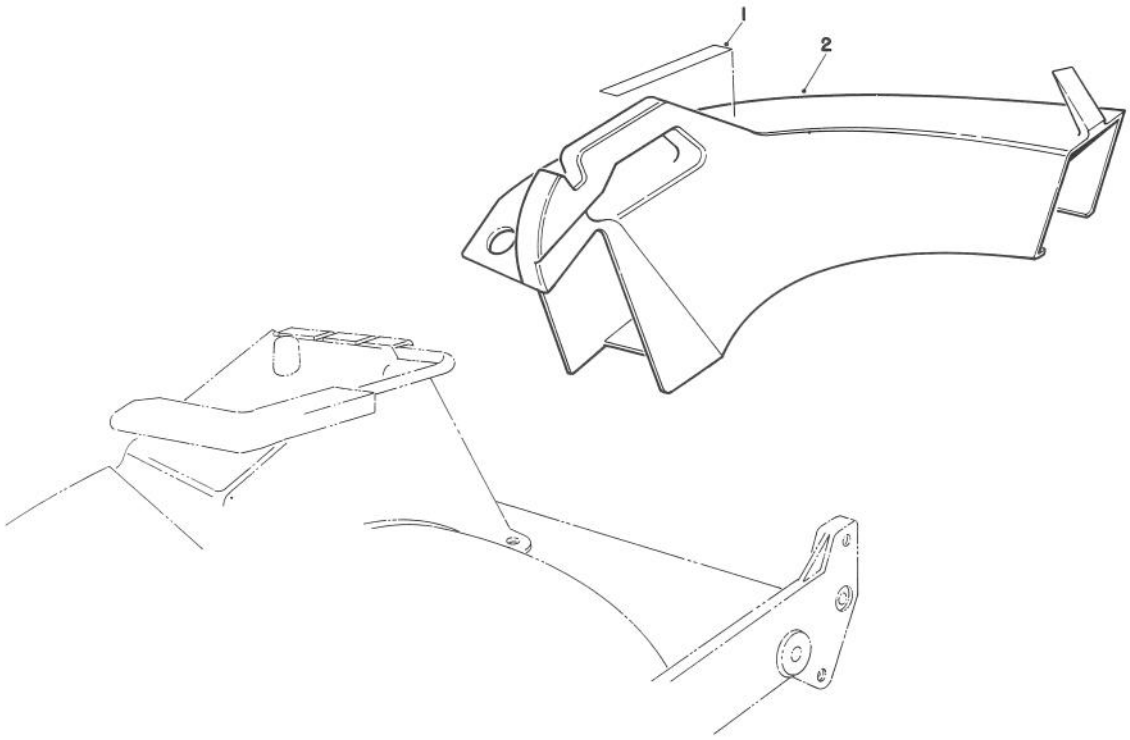

T-0716-89

SIDE DISCHARGE CHUTE MODEL NO. 59168 (Optional)

Ref. No.	Part No.	Description	No. Used
1	39-9120	Decal — Caution	1

Ref. No.	Part No.	Description	No. Used
2	13-2239	Chute Discharge (Incl. Ref. #1)	1

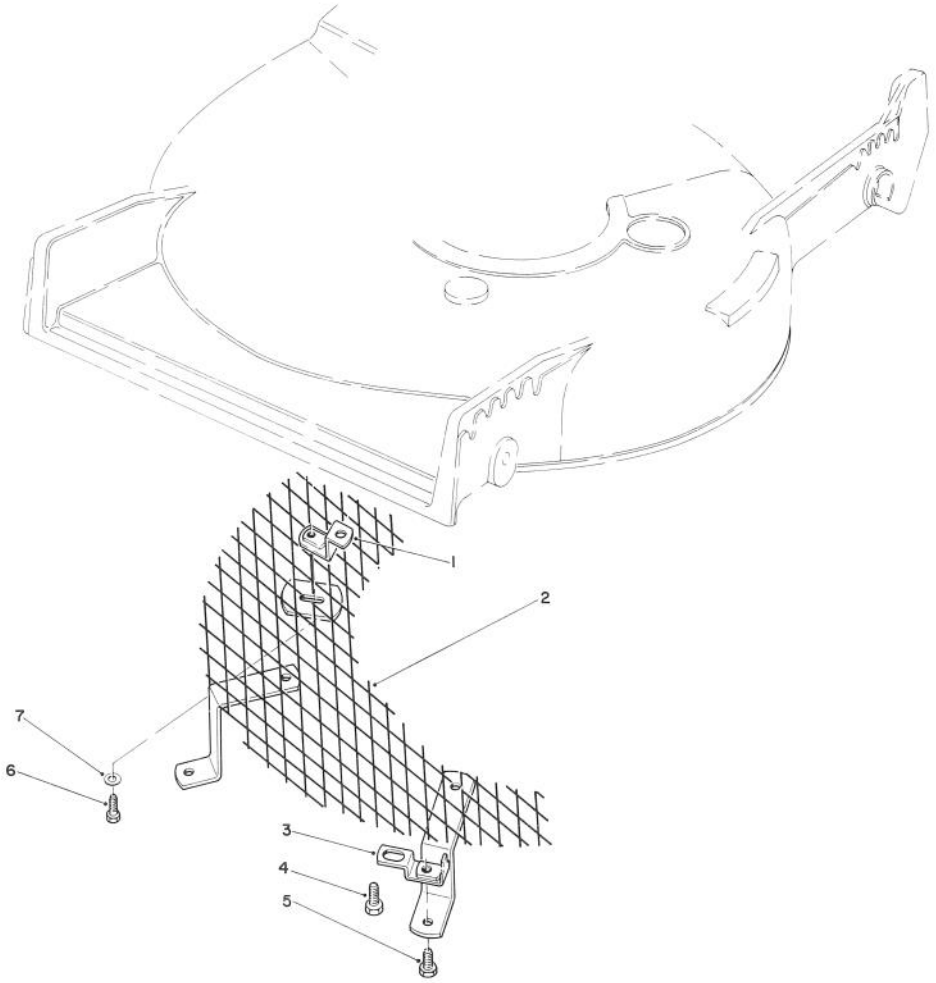

C-0302-89

LEAF SHREDDER KIT MODEL NO. 59157 (Optional)

Ref. No.	Part No.	Description	No. Used
1	47-6260	Bracket	1
2	47-6230	Screen	1
3	46-4880	Mounting Bracket	2
4	32144-11	Screw — Self-Tapping	3
5	321-3	Capscrew — Hex Hd.	2
6	321-5	Capscrew — Hex Hd.	1
7	3256-1	Washer	1

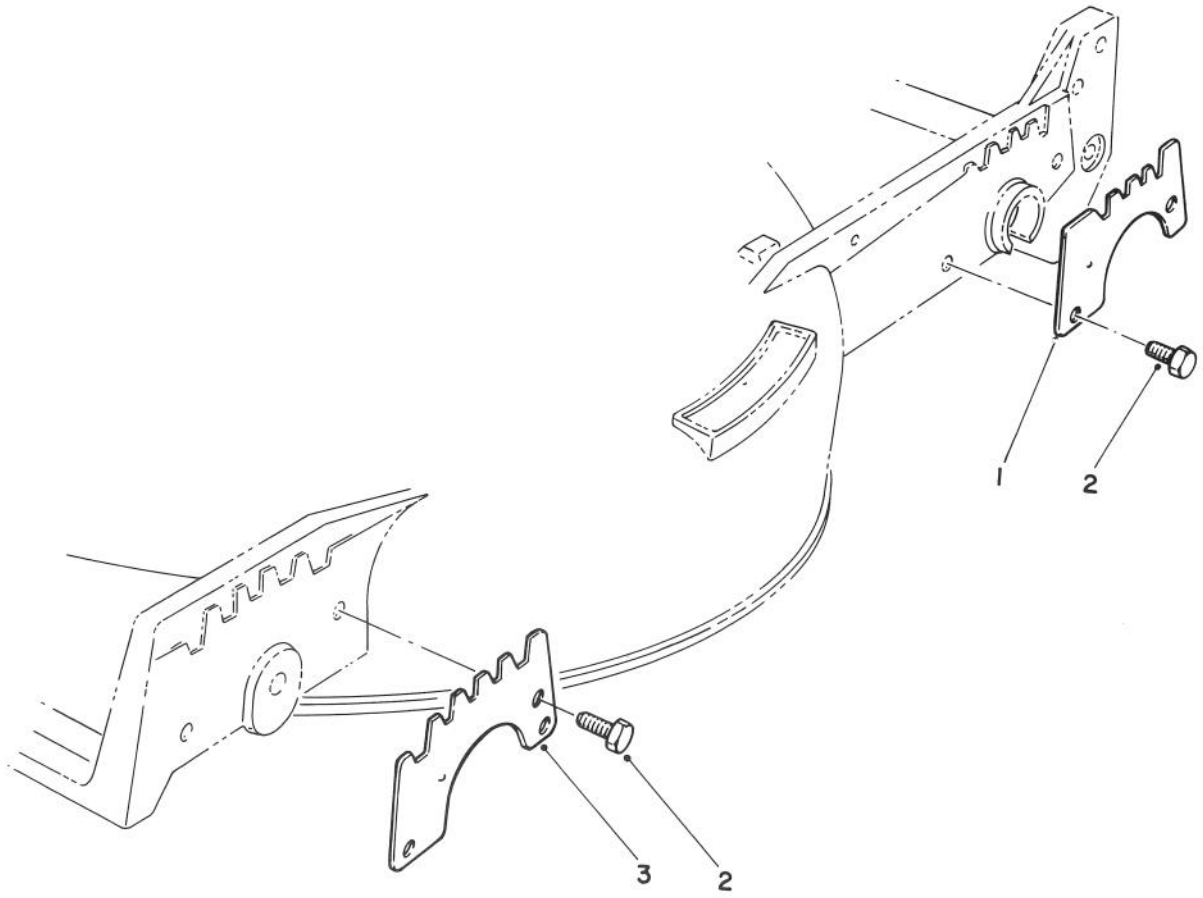

C-0332-89

WEAR PLATE KIT NO. 49-4080 (Optional)

Ref. No.	Part No.	Description	No. Used
1	49-4070	Plate — Wear, Rear	2
2	32104-17	Screw — Thread Forming	8

Ref. No.	Part No.	Description	No. Used
3	43-5050	Plate — Wear, Front	2

ENGINE TECUMSEH MODEL NO. TVS105-53112F

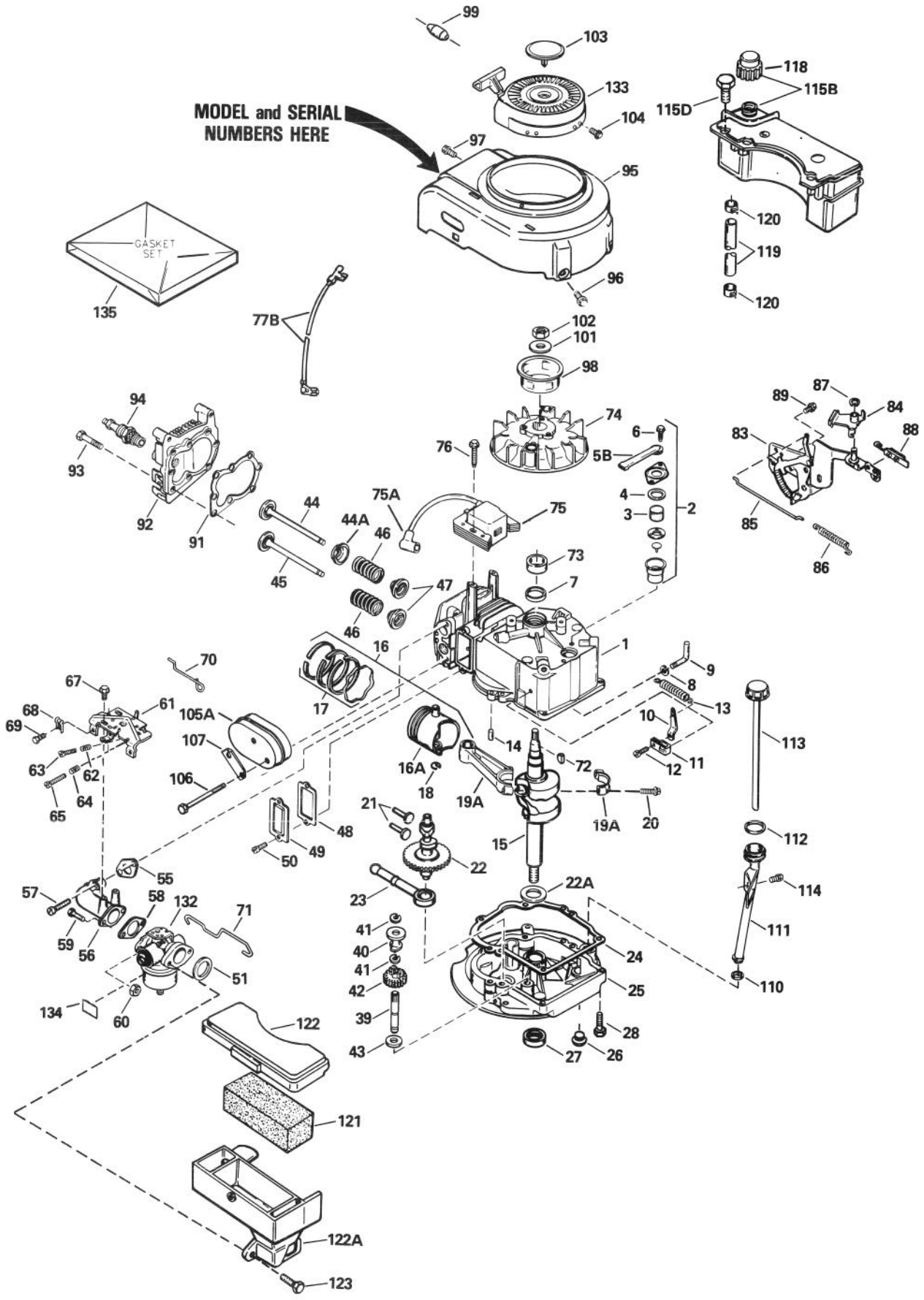

ENGINE TECUMSEH MODEL NO. TVS105-53112F

Ref. No.	Part No.	Description	No. Used
1	35513	Cylinder Assy. (Incl. Ref. #7 & 14)	1
2	34214A	Breather Assy. (Incl. Ref. #3 thru 6)	1
3	33734	Element, Breather	1
4	33735*	Gasket, Breather	1
5B	33886	Tube, Breather	1
6	30200	Screw, Hex Washer Hd.	2
7	32600	Seal, Oil	1
8	28277	Washer, Flat	1
9	30589	Rod, Governor (Incl. Ref. #8)	1
10	31383A	Lever, Governor	1
11	31335	Clamp, Governor Lever	1
12	650548	Screw, Hex Washer Hd.	1
13	31361	Spring, Extension	1
14	26727	Pin, Dowel	2
15	35664	Crankshaft Assy.	1
16	35544	Piston, Pin & Ring Assy. (Std.) (Incl. Ref. #16A, 17 & 18)	1
16	35545	Piston, Pin & Ring Assy. (.010 oversize) (Incl. Ref. #16A, 17 & 18)	1
16	35546	Piston, Pin & Ring Assy. (.020 oversize) (Incl. Ref. #16A, 17 & 18)	1
16A	35541	Piston & Pin Assy. (Std.) (Incl. Ref. #18)	1
16A	35542	Piston & Pin Assy. (.010 oversize) (Incl. Ref. #18)	1
16A	35543	Piston & Pin Assy. (.020 oversize) (Incl. Ref. #18)	1
17	35547	Ring Set, Piston (Std.)	1
17	35548	Ring Set, Piston (.010 oversize)	1
17	35549	Ring Set, Piston (.020 oversize)	1
18	20381	Ring, Piston Pin Retaining	1
19A	32875	Rod Assy., Connecting (Incl. Ref. #20)	1
20	32610A	Bolt, Connecting Rod	2
21	27241	Valve, Lifter	2
22	33553	Camshaft (Mech. Compression Release)	1
22A	32323	Washer, Thrust	1
23	29914	Pump Assy., Oil	1
24	35261*	Gasket, Mounting Flange	1
25	34311B	Flange, Mounting (Incl. Ref. #26, 27 & 39)	1
26	27244	Plug, Oil Drain	1
27	27897	Seal, Oil	1
28	650488	Screw, Hex Hd.	6
39	30574	Shaft, Governor	1
40	30588A	Spool, Governor	1
41	29193	Ring, Retaining	1
42	30591	Gear Assy., Governor (Incl. Ref. #43)	1
43	35479	Washer, Flat	1

Ref. No.	Part No.	Description	No. Used
44	29314B	Valve, Intake (Std.) (Incl. Ref. #47)	1
44	29315C	Valve, Intake (1/32" oversize) (Incl. Ref. #47)	1
44A	35390	Seal Assy., Intake Valve	1
45	29313C	Valve, Exhaust (Std.) (Incl. Ref. #47)	1
45	29315C	Valve, Exhaust (1/32" oversize) (Incl. Ref. #47)	1
46	31672	Spring, Valve	2
47	31673	Cap, Lower Valve Spring	1
48	27234A*	Gasket, Valve Spring Box	1
49	32755	Cover, Valve Spring Box	1
50	650128	Screw, Hex Hd.	1
51	34338*	Gasket, Air Cleaner	1
55	34690A*	Gasket, Intake Pipe	1
56	31384A	Pipe, Intake (Incl. Ref. #55)	1
57	650451	Screw, Hex Hd.	2
58	26756*	Gasket, Carbureto	1
59	6201	Screw, Hex Hd.	2
60	29752	Nut & Lockwasher	2
61	33131A	Bracket Assy., Control (Incl. Ref. #62 thru 65)	1
62	33802	Spring, Compression	1
63	650777	Screw, Fil. Hd.	1
64	31342	Spring, Compression	1
65	650549	Screw, Fil. Hd.	1
67	30200	Screw, Hex Washer Hd.	2
68	27793	Clip, Conduit	1
69	28942	Screw, Hex Washer Hd.	1
70	34337	Link, Governor Spring	1
71	34336	Link, Throttle	1
72	611004	Key, Flywheel	1
73	34080	Spacer, Flywheel Key	1
74	611112	Flywheel	1
75	34443A	Solid State Assy.	1
75A	610118	Cover, Spark Plug	1
76	650814	Screw, Torx Hex Washer Hd.	2
77B	34961	Wire, Ground	1
83	35015A	Bracket, S.E. Brake	1
84	34968	Lever, Brake	1
85	34966	Link, Control	1
86	34965	Spring, Extension	1
87	32309	Ring, Retaining	1
88	610973	Terminal Assy.	1
89	650839	Screw, Hex Washer Hd.	2
91	33015A*	Gasket, Cylinder Head	1
92	34342	Head, Cylinder	1
93	6021A	Screw, Hex Flange Hd.	8
94	35395	Spark Plug, Resistor (Champion RJ-19LM or equivalent)	1
95	35485	Housing, Blower	1
96	650831	Screw, Hex Washer Hd.	2
97	30200	Screw, Hex Washer Hd.	2
98	35000	Hub, Starter	1
99	34985	Retainer, Starter Roper	1
101	650815	Washer, Belleville	1

* Indicates items included in Gasket Set, Ref. #135.

ENGINE TECUMSEH MODEL NO. TVS105-53112F (Continued)

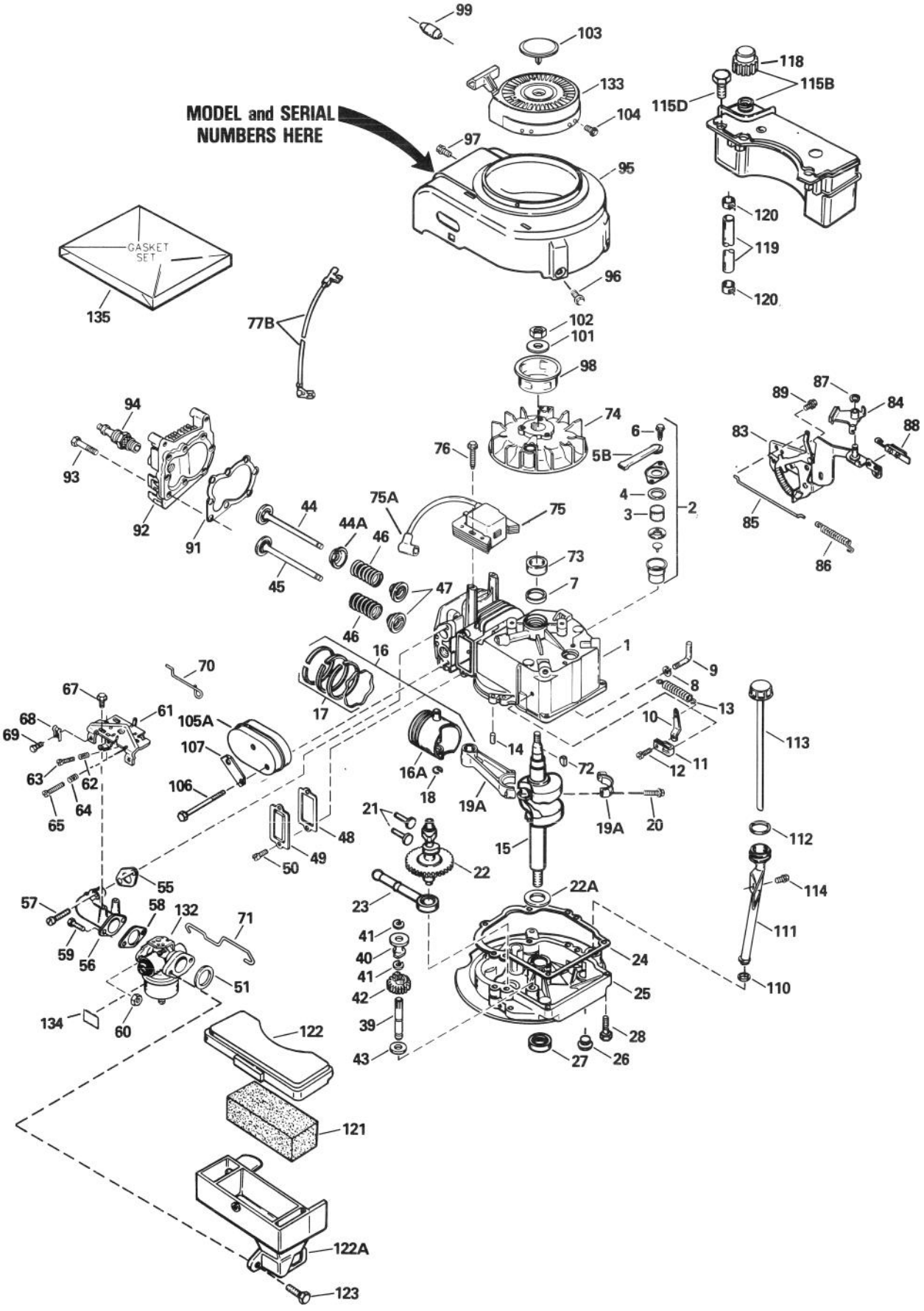

ENGINE TECUMSEH MODEL NO. TVS105-53112F (Continued)

Ref. No.	Part No.	Description	No. Used
102	650816	Nut, Flywheel	1
103	35392	Plug, Starter	1
104	650884	Screw, Hex Washer Hd.	4
105A	391019	Muffler Assy.	1
106	650795	Screw, Hex Hd.	2
107	33753	Plate, Lock	1
110	34265	Gasket, Fill Tube	1
111	35577	Tube, Oil Fill	1
112	35499	"O" Ring	1
113	35578	Dipstick, Oil Fill	1
114	650562	Screw, Hex Washer Hd.	1
115B	34476	Tank Assy. (Incl. Ref. #118 & 120)	1
115D	28763	Screw, Hex Washer Hd.	2

Ref. No.	Part No.	Description	No. Used
118	33032	Cap, Fuel	1
119	30705	Line, Fuel	1
120	26460	Clamp, Fuel Line	1
121	34340	Filter, Air Cleaner	1
122	34341A	Cover, Air Cleaner	1
122A	34858	Body, Air Cleaner	1
123	650806	Screw, Hex Washer Hd.	2
132	632099	Carburetor (Incl. Ref. #58)	1
133	590621	Starter, Rewind	1
134	34144	Decal, Primer	1
135	33238D	Gasket Set (Incl. items marked *)	1

* Indicates items included in Gasket Set, Ref. #135.

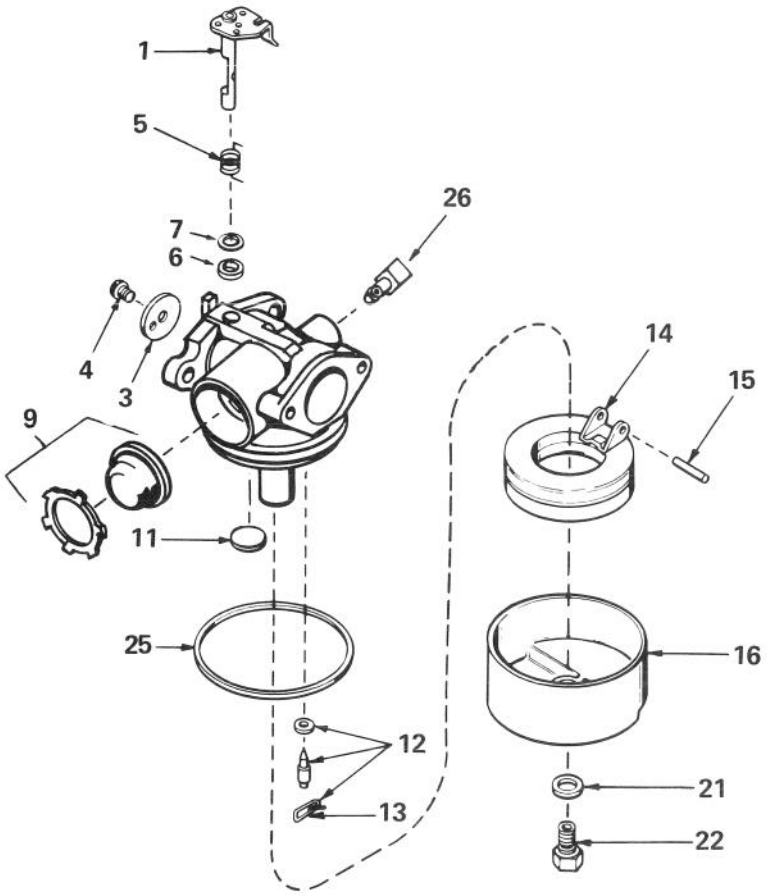

CARBURETOR NO. 632099

Ref. No.	Part No.	Description	No. Used
1	631615	Shaft & Lever Assy., Throttle	1
3	631616	Shutter, Throttle	1
4	650506	Screw, Throttle Shutter	1
5	631767	Spring, Throttle Return	1
6	631971	Seal, Dust	1
7	631184	Washer, Flat	1
9	632047	Primer Assy.	1
11	631027	Plug, Welch	1
12	631021	Inlet Needle, Seat & Clip Assy. (Incl. Ref. #13)	1

Ref. No.	Part No.	Description	No. Used
13	631022	Clip, Inlet Needle	1
14	632019	Float, Carburetor	1
15	631024	Shaft, Float	1
16	631700	Bowl, Float	1
21	631334	Gasket, Bowl-to-Body	1
22	632071	Nut, Float Bowl	1
25	631028	Gasket, Bowl-to-Body	1
26	631807	Fitting, Fuel Inlet	1

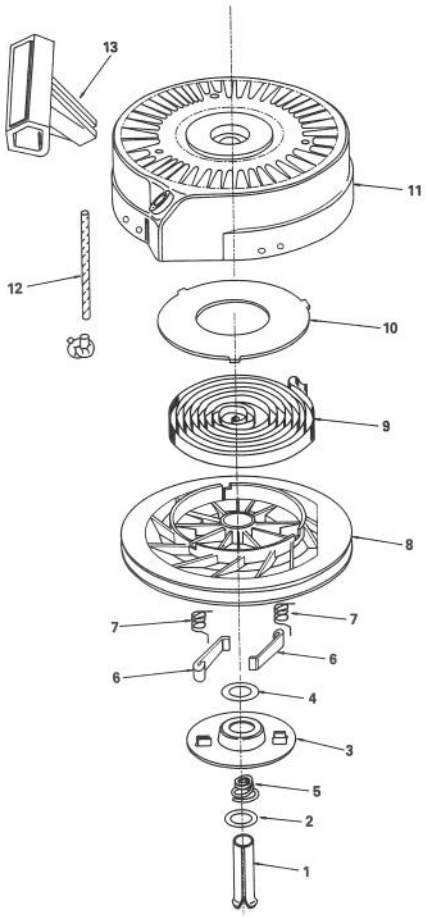

REWIND STARTER NO. 590621

Ref. No.	Part No.	Description	No. Used
1	590599A	Pin, Spring (Incl. Ref. #4)	1
2	590600	Washer	1
3	590615	Retainer	1
4	590601	Washer	1
5	590598	Spring, Brake	1
6	590616	Dog, Starter	2
7	590617	Spring, Dog	2

Ref. No.	Part No.	Description	No. Used
8	590618	Pulley	1
9	590619	Spring, Rewind	1
10	590620	Cover, Spring	1
11	590622	Housing Assy., Starter	1
12	590535	Rope, Starter (Length 98" & 9/64" dia.)	1
13	590452	Handle, Starter	1

PRODUCT CHANGES

In an effort to make improvements available to TORO owners as quickly as possible, minor changes are incorporated into Toro's products from time to time that do not become immediately shown in the Parts Catalog. If such a change apparently has been made in your unit, which is not reflected in your manual, see your TORO Distributor or his Authorized TORO Service Dealer for information and part numbers.

IDENTIFICATION AND ORDERING

MODEL AND SERIAL NUMBERS

The Mower has two identification numbers: a model number and a serial number. The two numbers are stamped on a decal which is located on the mower housing between the rear wheels. In any correspondence concerning the mower, supply model and serial numbers to assure that correct information and replacement parts are obtained.

To order replacement parts from an Authorized TORO Service Dealer, supply the following information:

1. Model and serial number of the mower.
2. Part number, description, and quantity of part(s) desired.

Note: Do not order by reference number if a parts catalog is being used; use the PART NUMBER.

The Toro Promise

A TWO YEAR LIMITED WARRANTY

The Toro Company promises to repair your TORO Product if defective in materials or workmanship. The following time periods from the date of purchase apply:

Residential Product ..... 2 Years
Residential Products Used Commercially... 45 Days

The costs of parts and labor are included, but the customer pays the transportation costs. Just return any residential product to an Authorized TORO Service Dealer or TORO Distributor.

Should you feel your TORO Product is defective and wish to rely on The Toro Promise, the following procedure is recommended:

1. Contact any Authorized TORO Service Dealer, TORO Master Service Dealer, or TORO Distributor (the Yellow Pages of your telephone directory is a good reference source).
2. He will either instruct you to return the product to him or recommend another Authorized TORO Service outlet which might be more convenient.
3. Bring the product along with your original sales slip, or other evidence of purchase date, to the service dealer.
4. The servicing dealer will inspect the unit, advise you whether the product is defective and, if so, make all repairs necessary to correct the defect without extra charge to you.

If for any reason you are dissatisfied with the dealer's analysis of the defect or the service performed, you may contact us.

Write:

TORO Consumer Service Department
8111 Lyndale Avenue South
Minneapolis, Minnesota 55420

The above remedy of product defects through repair by an Authorized TORO Service Dealer is the purchaser's sole remedy for any defect.

THERE IS NO OTHER EXPRESS WARRANTY. ALL IMPLIED WARRANTIES OF MERCHANTABILITY AND FITNESS FOR USE ARE LIMITED TO THE DURATION OF THE EXPRESS WARRANTY.

Some states do not allow limitations on how long an implied warranty lasts, so the above limitation may not apply to you.

This warranty applies only to parts or components which are defective and does not cover repairs necessary due to normal wear, misuse, accidents, or lack of proper maintenance. Regular, routine maintenance of the unit to keep it in proper operating condition is the responsibility of the owner.

All warranty repairs reimbursable under The Toro Promise must be performed by an Authorized TORO Service Dealer using Toro approved replacement parts.

Repairs or attemped repairs by anyone other than an Authorized TORO Service Account are not reimbursable under The Toro Promise. In addition, these unauthorized repair attempts may result in additional malfunctions, the correction of which is not covered by warranty.

THE TORO COMPANY IS NOT LIABLE FOR INDIRECT, INCIDENTAL OR CONSEQUENTIAL DAMAGES IN CONNECTION WITH THE USE OF THE PRODUCT INCLUDING ANY COST OR EXPENSE OF PROVIDING SUBSTITUTE EQUIPMENT OR SERVICE DURING PERIODS OF MALFUNCTION OR NON-USE.

Some states do not allow the exclusion or limitation of incidental or consequential damages, so the above limitation or exclusion may not apply to you.

This warranty gives you specific legal rights, and you may also have other rights which vary from state to state.

COUNTRIES OTHER THAN THE UNITED STATES OR CANADA

Customers who have purchased TORO products exported from the United States or Canada should contact their TORO Distributor (Dealer) to obtain guarantee policies for your country, province or state. If for any reason you are dissatisfied with your Distributor's service or have difficulty obtaining guarantee information, contact the TORO importer. If all other remedies fail, you may contact us at The Toro Company.

Compliance with Radio Interference Regulations Certified.
Certifie Conforme au Reglement sur le Brouillage Radioelectrique.

MAINTENANCE RECORD

Date								

MAINTENANCE RECORD

Date								