Form No. 3355–266 Rev A

Rear Roller Brush Kit

Reelmaster® 5500D, 6500D and 6700D

Model No. 03876

Installation Instructions

Important It is recommended that the Rear Roller Brush Kit only be used when cutting in the height of cut range of 3/8” to 7/8”.

Rear Roller Brush Kit may be used on the following:

- Models 03860, 03861 & 03862 RM55/6000 Cutting Units.
- All RM5500 Traction Units.
- Models 03806, 03807 & 03808 RM65/6700 Traction Units.

Do NOT use the Rear Roller Brush Kit on the following:

- Models 03800 to 03805 RM65/6700 Traction Units. The clip ace (reel speed sensors) function will no longer operate and damage to the cutting units may occur.

Loose Parts

Description	Quantity
Main roller brush housing Flange bolts M10–1.5 x 30mm (For serial numbers 200000001 thru 220000791) Flange bolts 3/8–16 1–1/4” lg. (For serial numbers 220000792 & Up)	1 2 2
Threaded round spacer Bolt 3/8–16 x 1” lg.	1 1
Grease fitting–90 degree	1
Pivot plate assembly Bolts 5/16–18 x 5/8” lg.	1 2
Roller brush assembly Key Bolt 5/16–18 x 1” lg. Flange nut–5/16	1 1 2 2
Excluder seal	1
Pulley Flange bolt–5/16 x 5/8” lg.	1 1
Belt	1
Belt cover Washer–.312 I.D. Lock nut–5/16	1 4 2
5 Link chain	1
Hex spacer Bolt w/patch 5/16–18 x 3/4” lg.	1 1
Installation instructions	1
Parts catalog	1

Tools / Materials Required for Assembly:

- 1/8” Allen wrench
- Alignment punch and hammer
- 5/16” wrench
- 3/8” wrench
- 1/2” wrench (thin)
- 1/2” wrench (standard)
- 1/2” socket
- 7/16” wrench
- 9/16” wrench
- 15 mm wrench
- 6” crescent wrench
- 242 Loctite (blue)
- Torque wrench (range: 15–19 ft.–lbs)

Note: These instructions and illustrations show the installation of the kit on cutting units with the end weights mounted on the left end of the cutting unit (Right front, rear and wing (RM 6700 only).

On left front, rear and wing (RM 6700 only) cutting units, roller brush assemblies must be reversed to mount on opposite end of cutting unit as follows (Fig. 1 & 2):

- Guard plate must be removed and mounted to opposite side of pivot plate (Fig. 1).

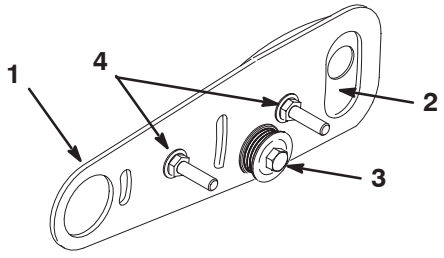

Figure 1

1. Pivot plate
2. Guard plate
3. Idler bearing assembly
4. Cover mounting bolts, washers and flange nuts

- Idler bearing assembly must be removed and mounted to opposite side of pivot plate (Fig. 1).

© 2006 by The Toro Company
8111 Lyndale Avenue South
Bloomington, MN 55420-1196

All Rights Reserved
Printed in the USA

- Cover mounting bolts, washers and flange nuts must be removed and mounted to opposite side of pivot plate (Fig. 1).
- Roller brush bracket assemblies must be removed and mounted to opposite ends of brush shaft (Fig. 2).

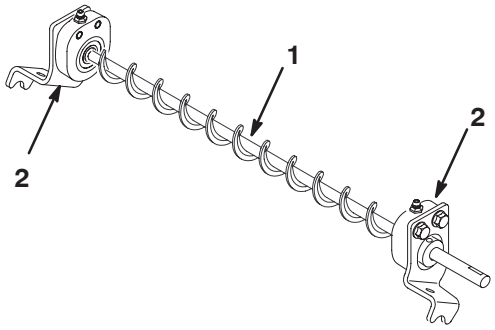

Figure 2

1. Roller shaft
2. Roller brush bracket assemblies

1. Park the traction unit on a level surface and engage the parking brake.

2. Ensure that the cutting units are disengaged. Turn the engine off and remove the key. Remove all cutting units from traction unit.

Important Check cutting unit for desired height of cut and attitude. Reset per Operator's Manual, if required, before installing Rear Roller Brush Kit.

3. Remove the (2) bolts securing the counter weight to the left end of the cutting unit. Remove the counter weight (Fig. 3).

Note: Retain O–ring for re–installation.

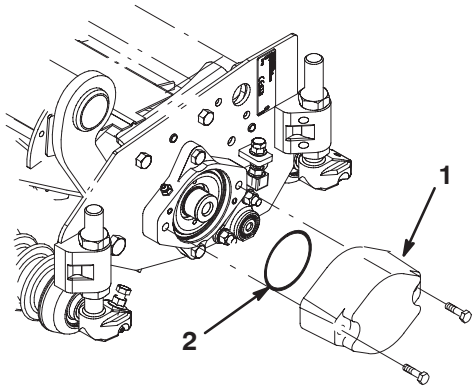

Figure 3

1. Counter weight
2. O–ring

4. Mount new main roller brush housing and previously removed O–ring to reel bearing housing with (2) M10–1.5 x 30mm flange bolts (15mm wrench) or 3/8–16 x 1–1/4" lg (9/16 wrench) depending on serial number (Fig. 4). Main roller brush housing to be positioned so threaded hole is to the rear of cutting unit.

Note: Make sure O–ring is properly positioned.

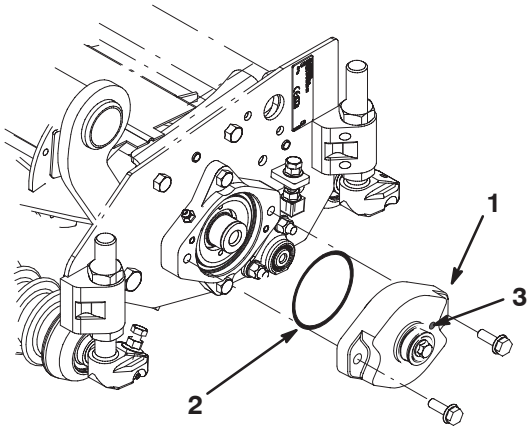

Figure 4

1. Main roller brush housing
2. O–ring
3. Threaded hole in housing

5. Remove bolt (Fig. 5) securing reel frame to weight end sideplate.

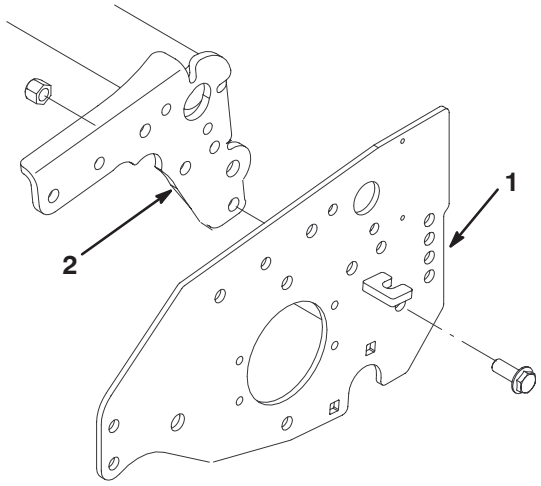

Figure 5

1. Weight end side plate
2. Reel frame

6. Mount the threaded spacer to reel frame and side plate with a 3/8–16 x 1" lg. flange bolt (9/16" wrench) (Fig. 6).

Note: To ease assembly of spacer, loosen bolt securing rear shield and rotate shield upward.

Note: To hold spacer when tightening, position a 1/2" wrench on slot on spacer.

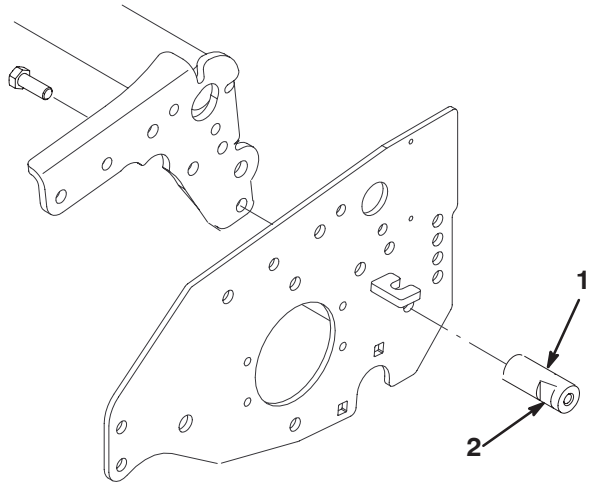

Figure 6

1. Threaded spacer
2. Slot (1/2" wrench)

Note: To ease access to rear roller, rotate cutting unit up onto front roller and carrier frame.

7. On motor end of cutting unit, remove bolt and flange nuts securing rear roller shaft to support rods. On opposite end of roller, loosen bolt and flange nut securing shaft to support rod. Slide roller to weight end; and lock roller shaft to support rod with bolt (to keep shaft from rotating) (Fig. 7).

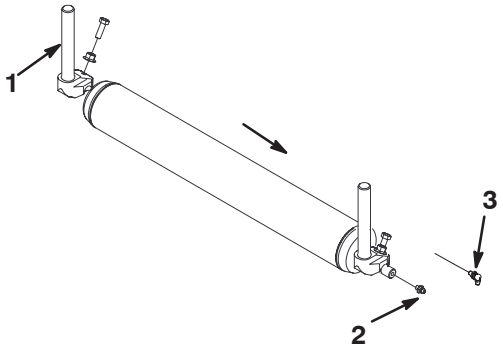

Figure 7

1. Support rod
2. Straight fitting
3. 90 Degree fitting

8. Using a 5/16" wrench, remove straight grease fitting from weight end of roller shaft (Fig. 7).

9. Using a 3/8" wrench, thread a 90 degree grease fitting into end of roller shaft until approximately 1/8" thread is exposed. Do not over tighten. Grease fitting to be pointing down (Fig. 7).

10. Remove bolt and flange nut securing shaft to support rod. Center roller between rear height of cut brackets.

11. Loosely assemble pivot plate assembly to roller housing and threaded spacer with (2) 5/16–18 x 5/8" lg. flange bolts (Fig. 8).

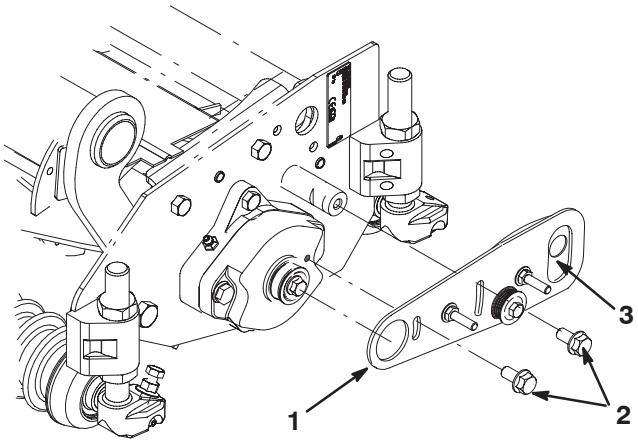

Figure 8

1. Pivot plate assembly
2. Flange bolts
3. Guard plate

12. Loosen guard plate bolt for adjustment later (Fig. 8).

13. Grease roller with No. 2 General Purpose Lithium Base Grease. Re–adjust 90 degree grease fitting if there is not enough clearance for grease gun between roller support rod and pivot plate.

14. Loosen (2) bolts securing each roller brush bearing housing to brush brackets (1/2 wrench) (Fig. 9).

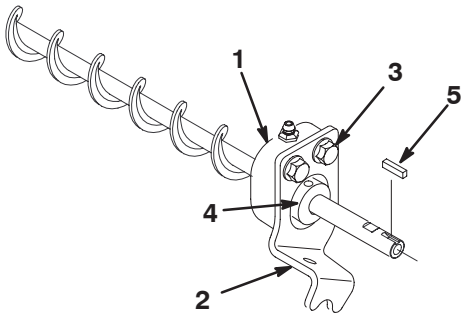

Figure 9

1. Roller brush bearing housing
2. Brush bracket
3. Bolts (2)
4. Locking collar w/setscrew
5. Square key

15. Using a 1/8" Allen wrench, loosen set screws securing collars to each end of roller brush shaft. Remove tape holding square key on shaft (Fig. 9).

16. Thread a 5/16" flange nut onto (2) 5/16–18 x 1" lg. bolts as shown in figure 10.

17. Position roller brush assembly onto support rods, aligning mounting holes and inserting key way end of roller brush shaft through opening in guard plate and pivot plate (Fig. 10).

18. First, secure roller by threading the (2) 5/16–18 x 1" lg. bolts thru roller brush brackets and into support rods. Do not tighten flange nuts at this time. Insure roller is centered between support rods (Fig. 10).

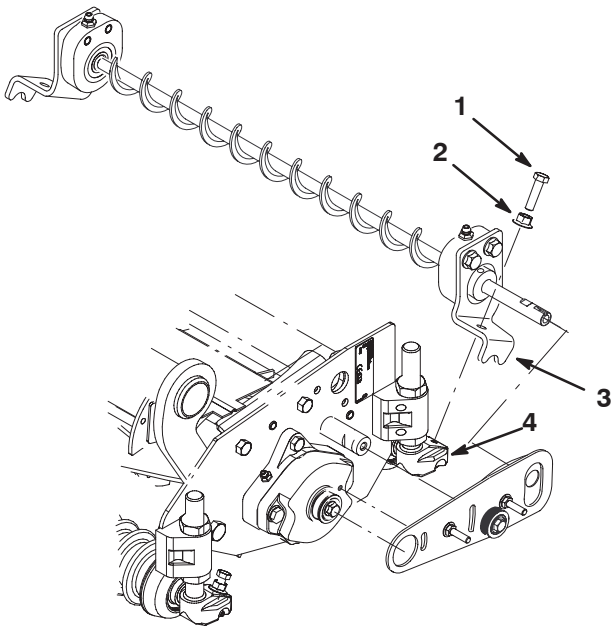

Figure 10

1. Bolt
2. Flange nut
3. Roller brush assembly
4. Support rod

19. Second, tighten flange nuts locking roller brush brackets to support rods. Insure brackets are parallel with side plates (Fig. 10).

Note: Use a 6" crescent wrench to hold roller brush bracket while tightening down flange nut with a thin 1/2" wrench.

20. Press excluded seal onto roller brush shaft until it is aligned with the outer edges of slots (Fig. 11). Seal to be positioned with lip toward end of shaft. Apply a film of grease onto lip of seal.

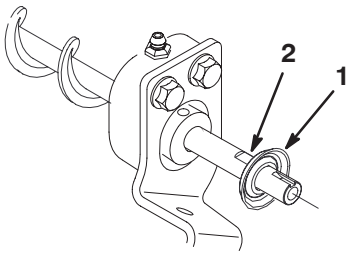

Figure 11

1. Excluded seal
2. Slots

21. Insert square key into key way on roller brush shaft (Fig. 12).

22. Slide pulley onto key and end of roller brush shaft (Fig. 12).

23. Apply 242–Loctite (blue) to threads of 5/16–18 x 5/8" lg. flange bolt. Secure pulley to shaft with bolt and torque to 15 to 19 ft.–lbs. (1/2" wrench) (Fig. 12).

Note: Hold roller shaft with a 7/16" wrench to tighten pulley bolt.

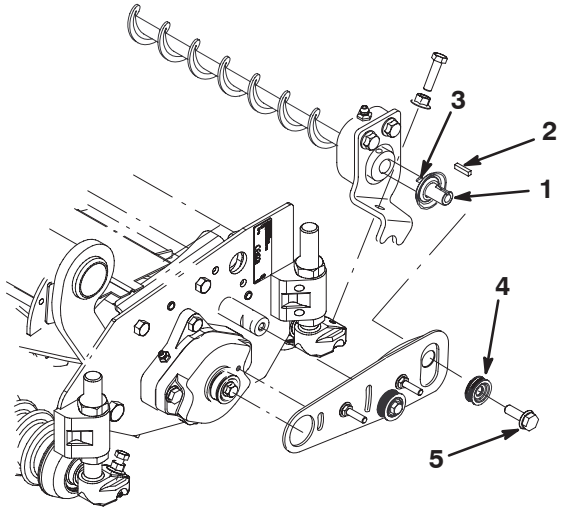

Figure 12

1. Roller shaft
2. Square key
3. Slot in shaft (7/16" wrench)
4. Pulley
5. Flange bolt

24. Move roller brush assembly so that all three pulleys are in a straight line.

25. Move excluder seal so it is just touching guard plate. Clearance between seal and guard plate not to exceed .030".

Note: Belt may fail prematurely if pulleys are not properly aligned.

26. Adjust roller bearing housings until there is contact to 0.010" clearance between roller brush and rear roller. Tighten bolts securing roller bearing housings to brush brackets.

Note: Roller brush should be parallel to rear roller and brush brackets should be parallel to side plates.

27. Rotate the bearing locking collar in the direction of the rotation of the brush, by hand until the collar is tight on the roller brush shaft (Fig. 13).

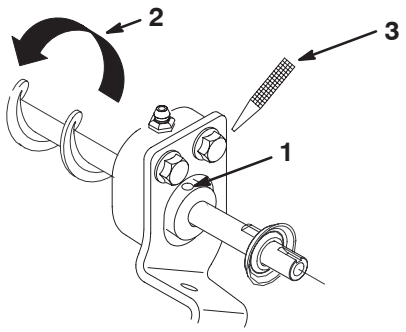

Figure 13

1. Locking collar (blind hole)
2. Direction of brush rotation
3. Punch

28. Tighten the collar further by placing a punch in the blind hole of the collar and striking it sharply in the direction of the rotation of the brush (Fig. 13). Retighten the collar set screw to secure the adjustment (1/8” Allen wrench).

29. Install belt over pulleys (Fig. 14).

30. Using about 5 lbs of force, push down on rear end of pivot plate to initially set belt tension. Tighten 5/16” flange bolts securing pivot plate to main bearing housing and threaded spacer (1/2” wrench) (Fig. 14).

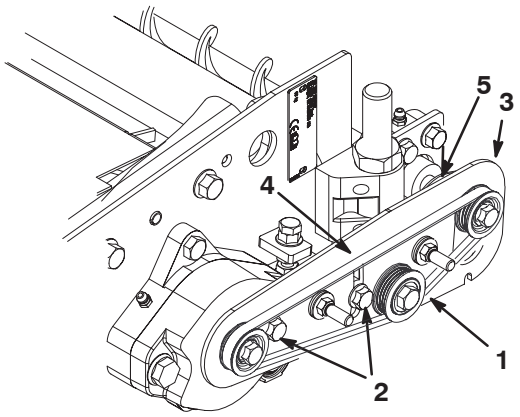

Figure 14

1. Pivot plate
2. Flange bolts
3. Press down here to tension belt
4. Press & measure belt deflection here (.25”)
5. Guard plate

31. Check belt tension. Correct belt tension should have approximately 0.25” deflection at the center of the belt with 2 lbs of force applied (Fig. 14).

32. Adjust guard plate so that it covers main pivot plate hole and does not contact rear roller brush shaft (Fig. 14). Tighten bolt and flange nut securing guard plate.

Note: Proper installation of guard plate and excluder seal will help prevent debris and water from enter pulley area and preventing premature wear of components.

33. Insert a washer onto each cover mounting bolt (Fig. 15).

34. Slide belt cover onto mounting bolts and secure with (2) washers and lock nuts (Fig. 15). **Do not overtighten nuts as damage to cover may occur.**

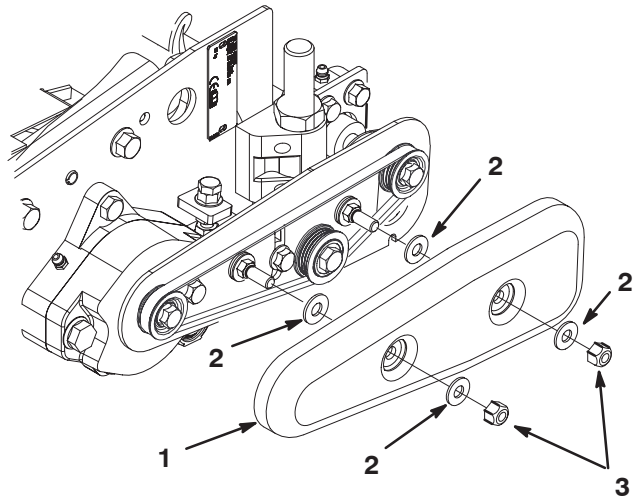

Figure 15

1. Cover
2. Locknuts
3. Washers

35. Lower and secure rear shield, if raised.

36. Lubricate grease fittings on roller brush bearing housings and remainder of cutting unit with No. 2 General Purpose Lithium Base Grease (Fig. 16).

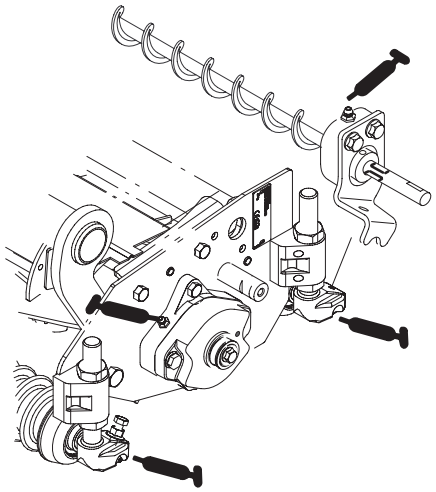

Figure 16

On all Cutting units

To prevent damage to the brush covers, make sure the lynch pin (Fig. 17) is installed in the lift arm steering plates.

RM5500 Front Center Cutting unit Only

1. Remove chain and install new 5 link chain as shown in figure 17.

Note: The new 5 link chain will prevent roller brush / traction unit frame contact.

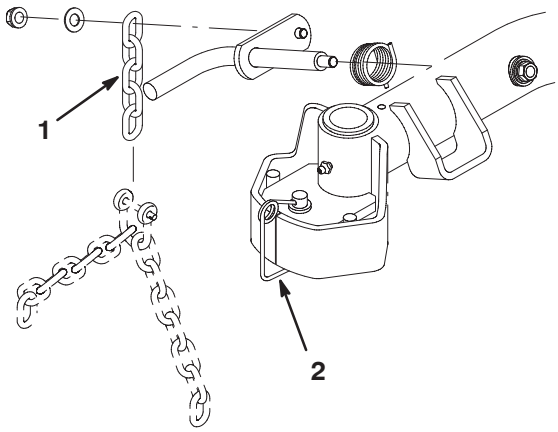

Figure 17

1. 5 link chain
2. Lynch pin

RM6500/6700 Front Right Cutting unit Only

1. Remove nut and right bumper from lift arm steering plate (Fig. 18).

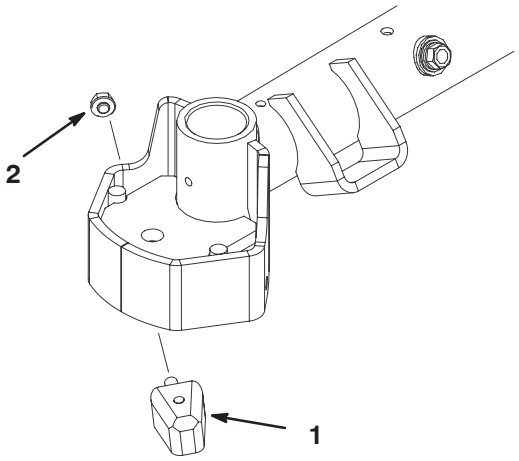

Figure 18

1. Right bumper
2. Nut

2. Mount hex spacer to lift arm steering plate with a 5/16 bolt w/lock patch, positioning as shown in figure 19.

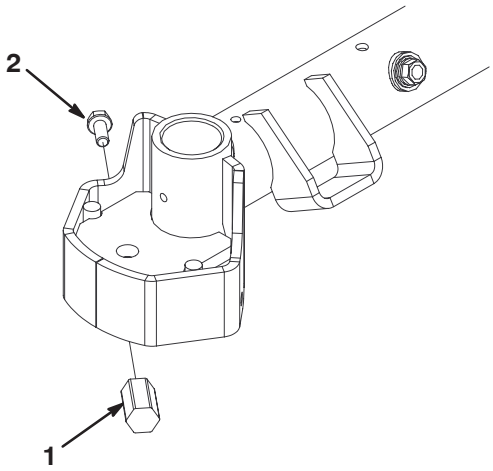

Figure 19

1. Hex spacer
2. Bolt w/lock patch

Note: The hex spacer and bolt will prevent the right front roller brush cover from contacting the front center cutting unit motor.

Note: Hex spacer and bolt are not required if the lynch pin is installed in the lift arm steering plate (Fig. 17).

Maintenance

1. Clean under belt cover and check belt tension every 50 hours.
2. Grease fittings weekly or after every washing.
3. When replacing roller brush, torque J bolts to 20 to 25 in–lbs.
4. When making minor changes to height of cut (less than 1/8”), only adjust front roller, if possible.
5. If paralleling bedknife to reel is required, when rear roller brush is installed, use a crows foot wrench for adjusting the side bed bar bolt, which is located behind the roller brush pivot plate

Important Backlapping at the incorrect reel speed may loosen and strip the drive pulley threads. Refer to the Cutting Unit Operator’s Manual for backlapping procedure.

Important When performing cutting unit maintenance, rotate cutting unit up onto front roller and carrier frame to prevent damage to rear roller brush.

6. Roller brush, idler bearing, and belt are considered consumable items.


TORO®