Form No. 3355-324 Rev A

Drag Mat Assembly

For Sand Pro®/Infield Pro® 3040 and 5040 Traction Units

Model No. 112-1424

Installation Instructions

Note: Determine the left and right sides of the machine from the normal operating position.

Note: The Hitch Tow Bar kit, Part No. 108-9427, and Quick Attach Lift Arm Adapter kit, Part No. 110-1375, are required for the use of the Drag Mat Assembly.

Installation

Loose Parts

Use the chart below to verify that all parts have been shipped.

Step	Description	Qty.	Use
1	Drag mat carrier assembly	1	Install the drag mat carrier
2	Drag mat Shackle Clevis pin (3/8 x 1-1/2 inches) Hair pin cotter pin Screw (5/16 x 1-1/2 inches) Lock nut (5/16 inch)	1 1 1 1 1 1	Assemble the drag mat

© 2006—The Toro® Company
8111 Lyndale Avenue South
Bloomington, MN 55420

Register at www.Toro.com.

Original Instructions (EN)
Printed in the USA.
All Rights Reserved

Step

1

Installing the Drag Mat Carrier

Parts needed for this step:

1	Drag mat carrier assembly

Procedure

1. Install the drag mat carrier to the tow hitch assembly as shown in Figure 1.

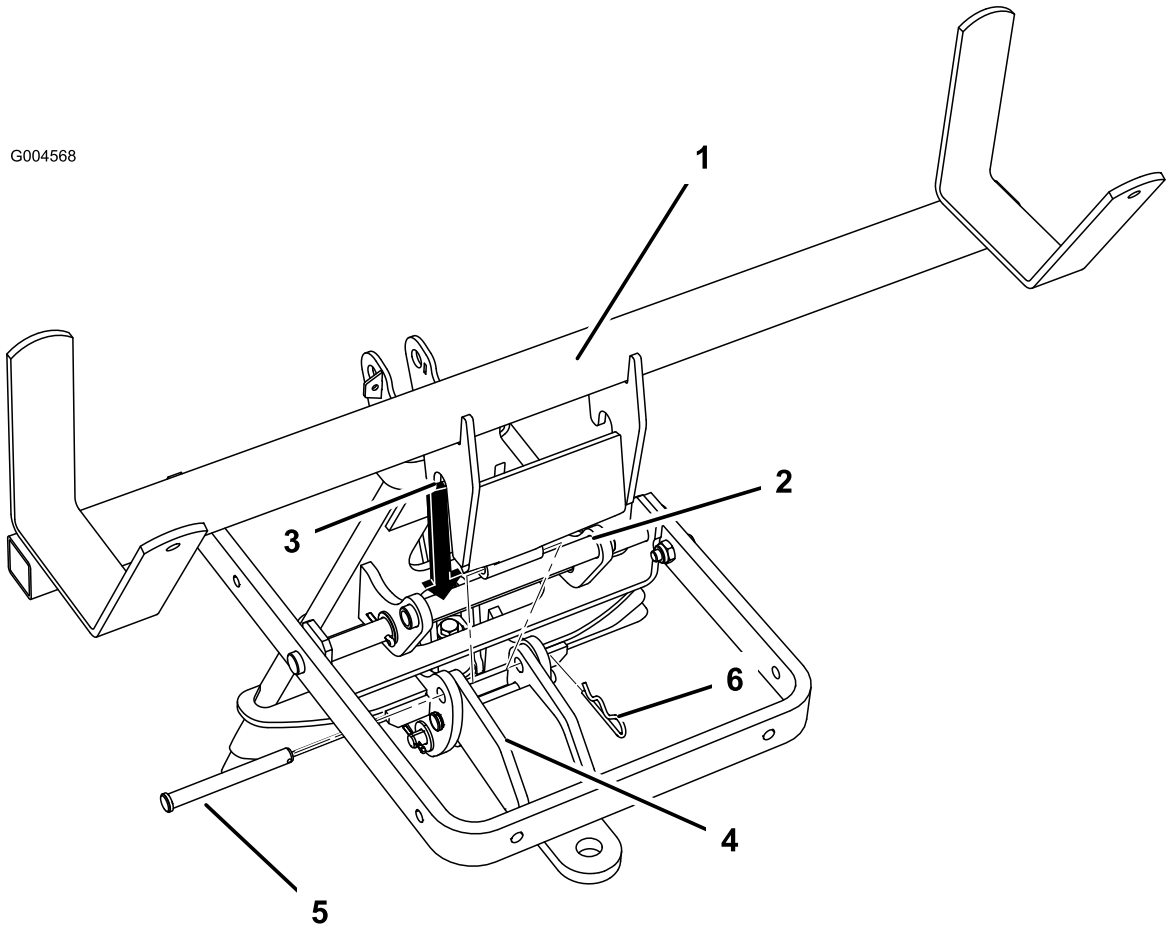

Figure 1

1. Drag mat carrier
2. Hitch tow bar adapter
3. Notch in carrier
4. Tow hitch
5. Clevis pin, from
6. Cotter pin

2. Secure the drag mat carrier to the tow hitch using a clevis pin and cotter pin supplied in the Hitch Tow Bar kit.

Step 2

Assembling the Drag Mat

Parts needed for this step:

1	Drag mat
1	Shackle
1	Clevis pin (3/8 x 1-1/2 inches)
1	Hair pin cotter pin
1	Screw (5/16 x 1-1/2 inches)
1	Lock nut (5/16 inch)

Procedure

1. Install one end of the chain to the tow bar using a shackle, clevis pin (3/8 x 1-1/2 inches) and cotter pin (Figure 2).

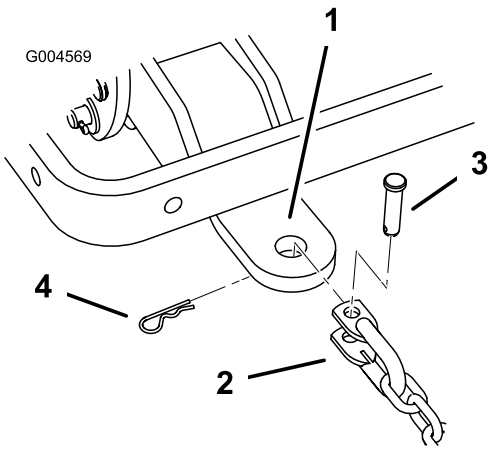

Figure 2

1. Tow bar
2. Shackle
3. Clevis pin (3/8 x 1-1/2 inches)
4. Cotter pin

2. Secure the other end of the chain to the drag mat using a screw (5/16 x 1-1/2 inches) and lock nut (5/16 inch) (Figure 3).

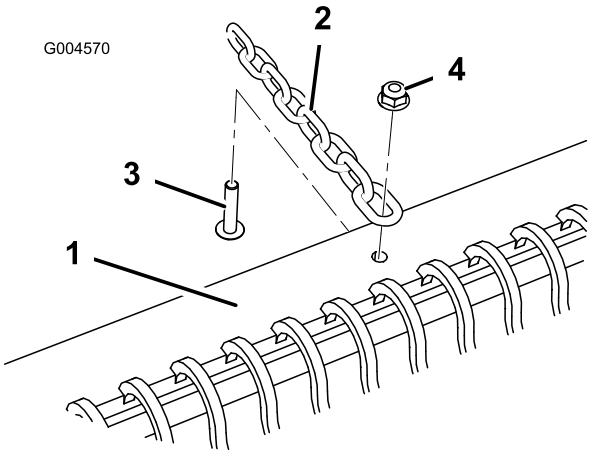

Figure 3

1. Drag mat
2. Chain
3. Bolt (5/16 x 1-1/2 inches)
4. Locknut (5/16 inch)

Operation

Use caution while operating the machine with the drag mat installed. Keep operating speeds to a minimum, acceptable level. Avoiding areas and objects that may snag or interrupt the travel of the mat is recommended for maximum mat life.

When not in use, the drag mat should be stored in the drag mat carrier. Store the drag mat in the carrier by rolling up the mat and placing it into the carrier arms.

Important: Do not tow anything while the drag mat is stored in the carrier. Remove the carrier and mat before attaching and towing other implements.

Note: Refer to the Hitch Tow Bar kit *Installation Instructions* for tongue weights.



Count on it.