FORM NO. 3313-947

TORO®

MODEL NO. 38110C-9901016 & UP
MODEL NO. 38115C-9900832 & UP

PARTS CATALOG

CR-20 SNOWTHROWER

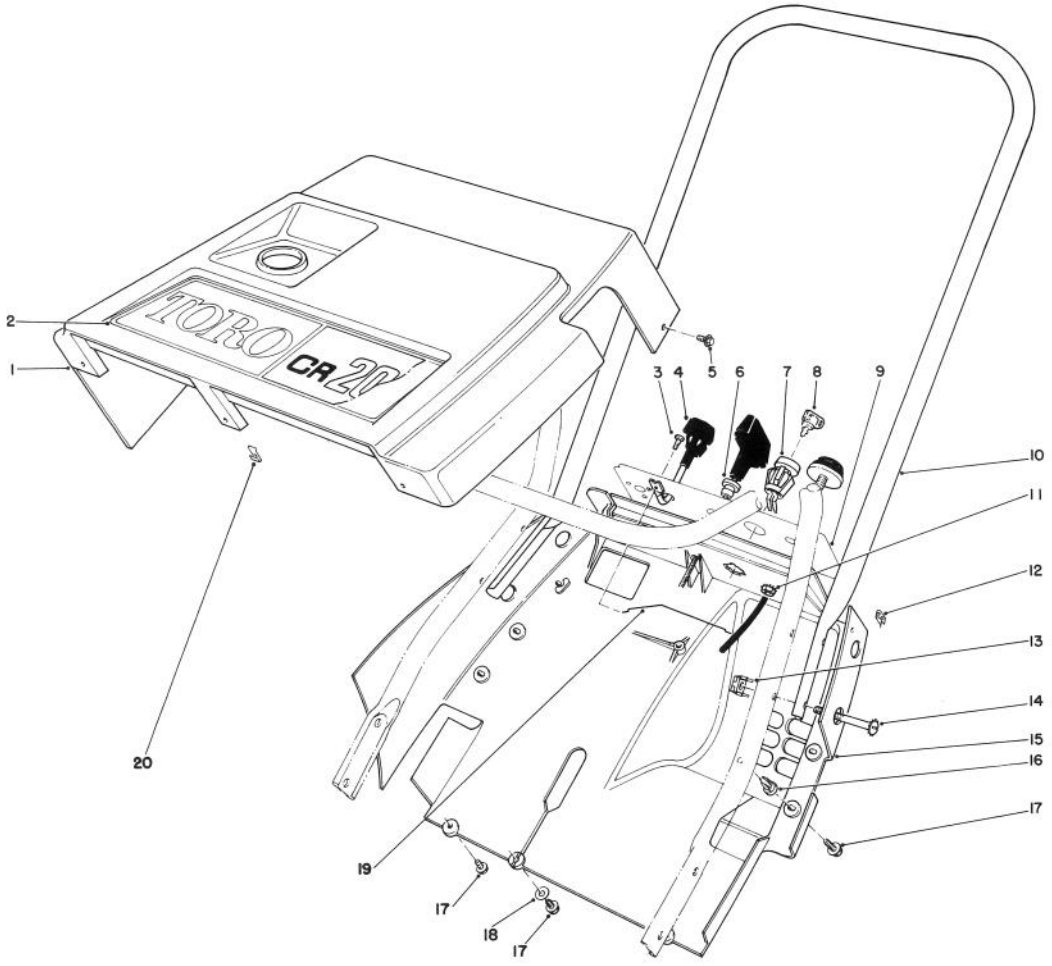

C-0060-90

SHROUD & HANDLE ASSEMBLY

Ref. No.	Part No.	Description	No. Used
1	39-0890	Shroud — Upper	1
2	54-9980	Decal — Toro (Model 38110C)	1
*	54-9970	Decal — Toro (Model 38115C)	1
3	32144-27	Screw — Thread Forming (Model 38115C)	3
4	39-0560	Control Assembly — Choke	1
5	32104-76	Screw — Thread Forming Acorn Hd.	2
6	23-7470	Guide — Starter Rope	1
7	40-5940	Switch — On/Off	1
8	63-8360	Key	1
9	54-9950	Decal — Control Panel (Model 38110C)	1

Ref. No.	Part No.	Description	No. Used
*	54-9960	Decal — Control Panel (Model 38115C)	1
10	49-1380	Handle — Upper	1
11	32149-2	Nut — Lock	1
12	49-1490	Nut — Shroud	2
13	3290-225	Nut — Retainer	4
14	32105-11	Screw — Cap Hex Hd.	4
15	49-1610	Shroud — Lower	1
16	3290-453	Nut — Push In	3
17	32144-34	Screw — Thread Forming	6
18	3256-61	Washer	1
19	39-8180	Wire — Control	1
20	52-3300	Nut — U	3

* Not Illustrated

©The Toro Company — 1989

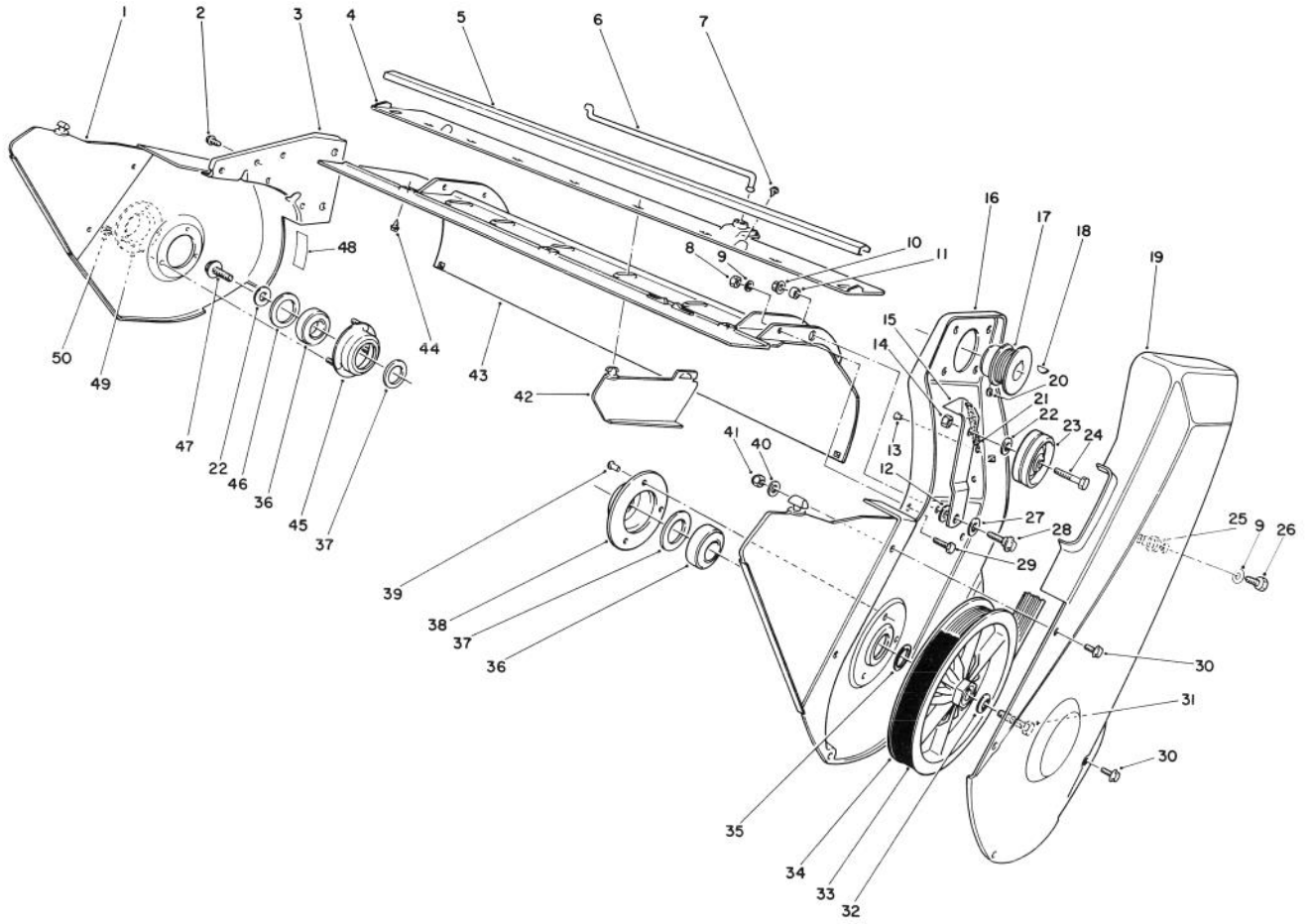

C-0061-90

LOWER FRAME ASSEMBLY

Ref. No.	Part No.	Description	No. Used
1	52-7080	Vane — Outer	2
2	32144-4	Screw — Hex Hd.	2
3	52-9100	Side Plate — R.H.	1
4	41-8480	Mount — Vane	1
5	63-3720	Moulding	1
6	52-7090	Linkage — Vane Adjustment	1
7	32104-77	Screw — Self Tapping	2
8	32152-4	Nut — Lock	5
9	3256-22	Washer	6
10	32128-25	Nut — Flange Lock	1
11	51-2950	Spacer	1
12	5-4460	Washer — Pivot	1
13	29-7430	Eyelet	1
14	3296-39	Nut — Lock	1
15	26-8990	Arm — Idler	1
16	33-2130	Side Plate — L.H.	1
17	25-6400	Pulley — Engine	1
18	3257-3	Key — Woodruff	1
19	54-9940	Cover — Drive	1
20	3245-41	Screw — Set	2
21	26-9730	Spring — Extension	1
22	3256-24	Washer — Flat	2
23	25-5880	Pulley — Idler	1
24	323-9	Screw — Cap Hex Hd.	1
25	32117-3	Grommet	1

Ref. No.	Part No.	Description	No. Used
26	32104-109	Screw — Self Tapping	1
27	25-5640	Washer	1
28	27-0410	Screw — Shoulder	1
29	321-4	Screw — Cap Hex Hd.	5
30	32105-2	Screw — Mach. Hex Hd.	6
31	321-30	Screw — Cap Hex Hd.	1
32	3290-456	Washer — Belleville	1
33	25-6430	Belt — Drive	1
34	60-9320	Pulley — Rotor	1
35	26-0970	Washer	1
36	38-7820	Bearing — Ball	2
37	52-7280	Washer — Thrust	2
38	38-8620	Flange — Bearing	1
39	3292-8	Rivet	3
40	3256-61	Washer — Flat	4
41	3296-2	Nut — Lock	6
42	52-7060	Vane — Inner	7
43	52-7171	Housing	1
44	32144-34	Screw — Self Tapping	3
45	52-9110	Flange — Bearing	1
46	52-7270	Washer — Rubber	1
47	3234-25	Screw — Cap Hex Flange Hd.	1
48	40-2850	Decal — Made in Canada	1
49	52-7290	Retainer — Bearing	1
50	32111-14	Nut — Cap	3

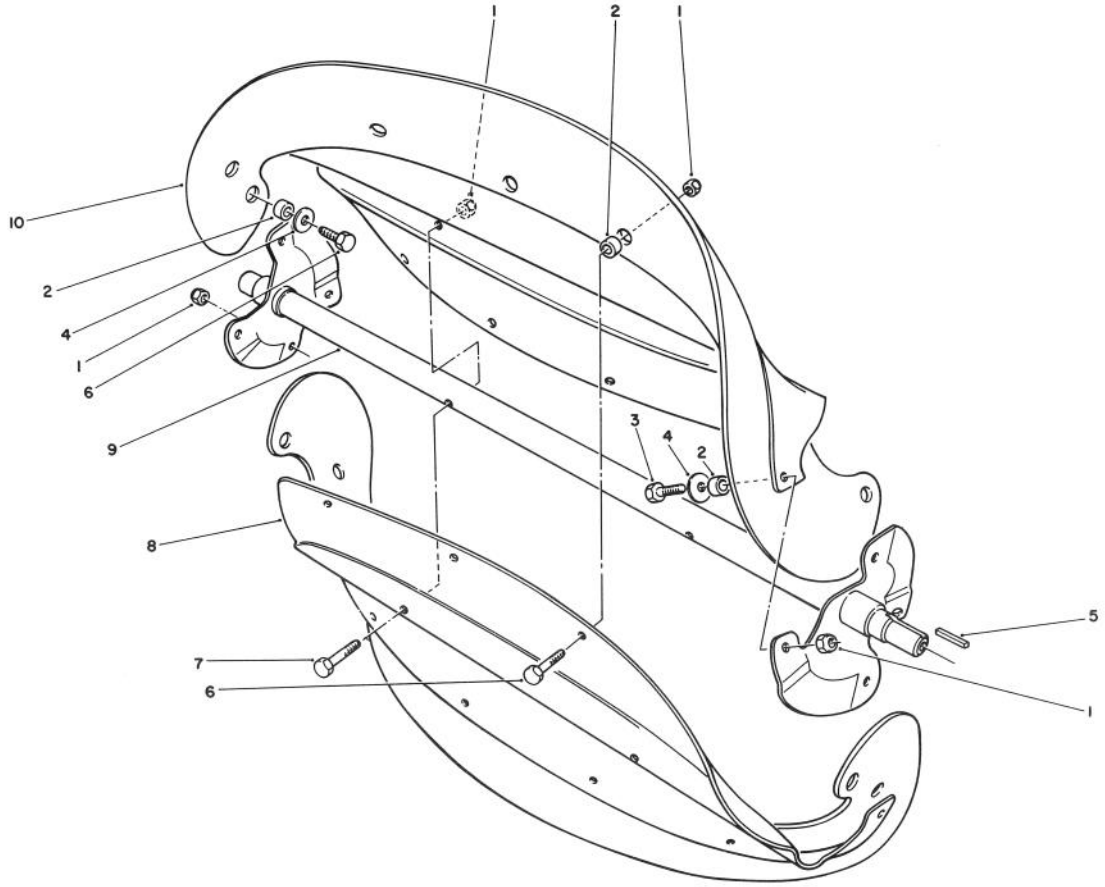

C-0015-90

ROTOR ASSEMBLY

Ref. No.	Part No.	Description	No. Used
1	3296-56	Nut — Lock	18
2	55-9370	Spacer	16
3	321-5	Screw — Hex Hd.	4
4	3256-67	Washer	8
5	10-8040	Key — Square	1

Ref. No.	Part No.	Description	No. Used
6	321-4	Screw — Hex Hd.	12
7	321-8	Screw — Hex Hd.	2
8	55-8900	Rotor Half	2
9	55-9201	Rotor Shaft Assembly	1
10	54-9920	Blade — Rotor	2

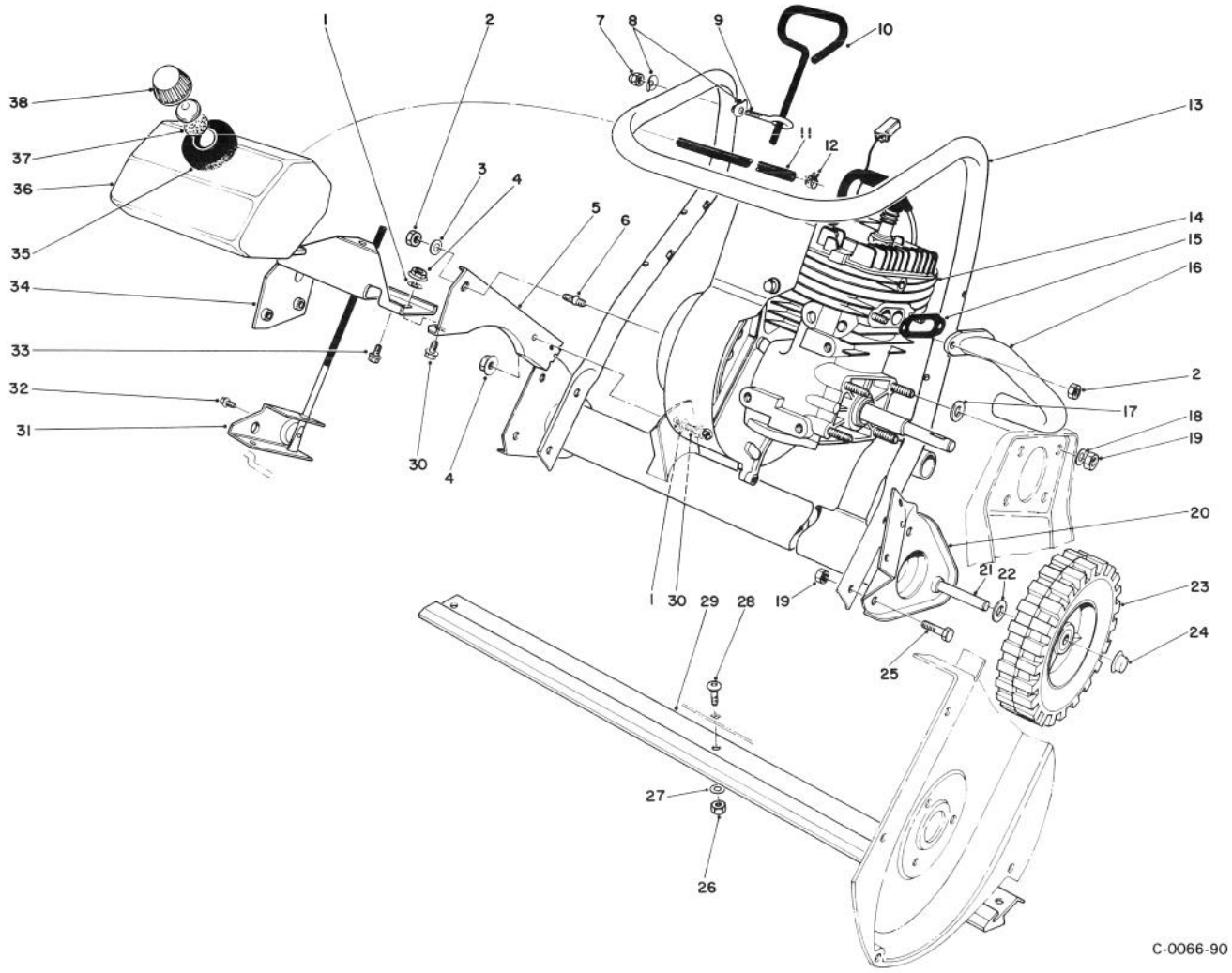

ENGINE ASSEMBLY (MODEL NO. 38110C)

Ref. No.	Part No.	Description	No. Used
1	3290-244	Washer	2
2	32152-4	Locknut	3
3	7-3315	Spacer	1
4	32128-30	Flange Nut	2
5	49-1570	Support — Engine	1
6	38-8710	Stud	1
7	32111-7	Cap Nut	1
8	3-7501	Washer	2
9	52-7120	Eye Bolt	1
10	49-1600	Rod — Vane Adjustment	1
11	49-2480	Gas Line	1
12	2412-86	Clamp	2
13	49-1360	Lower Handle	1
14		Engine	1
15	23-3810	Gasket — Exhaust Pipe	1
16	52-7200	Exhaust Pipe	1
17	4-2390	Spacer	4
18	3256-23	Washer	4
19	3296-29	Locknut	10
20	49-1540	Muffler Assembly	1

Ref. No.	Part No.	Description	No. Used
21	27-0060	Axle	1
22	3256-24	Washer	2
23	23-3250	Wheel	2
24	3290-320	Retainer — Push On	2
25	322-3	Capscrew	6
26	3296-56	Locknut	3
27	3256-22	Washer — Flat	3
28	52-7130	Button Hd. Capscrew	3
29	23-3170	Scraper	1
30	3234-23	Screw — Flange	2
31	39-0840	Bracket — Vane Adjustment	1
32	32144-1	Screw — Special	1
33	32144-4	Screw	3
34	49-1550	Support — Gas Tank	1
35	25-1610	Foam Pad	1
36	39-8670	Gas Tank	1
37	20-4620	Gasket	1
38	42-0680	Gas Cap (Incl. Ref. #37)	1
*	12-4309	Loose Parts	1

* Not Illustrated

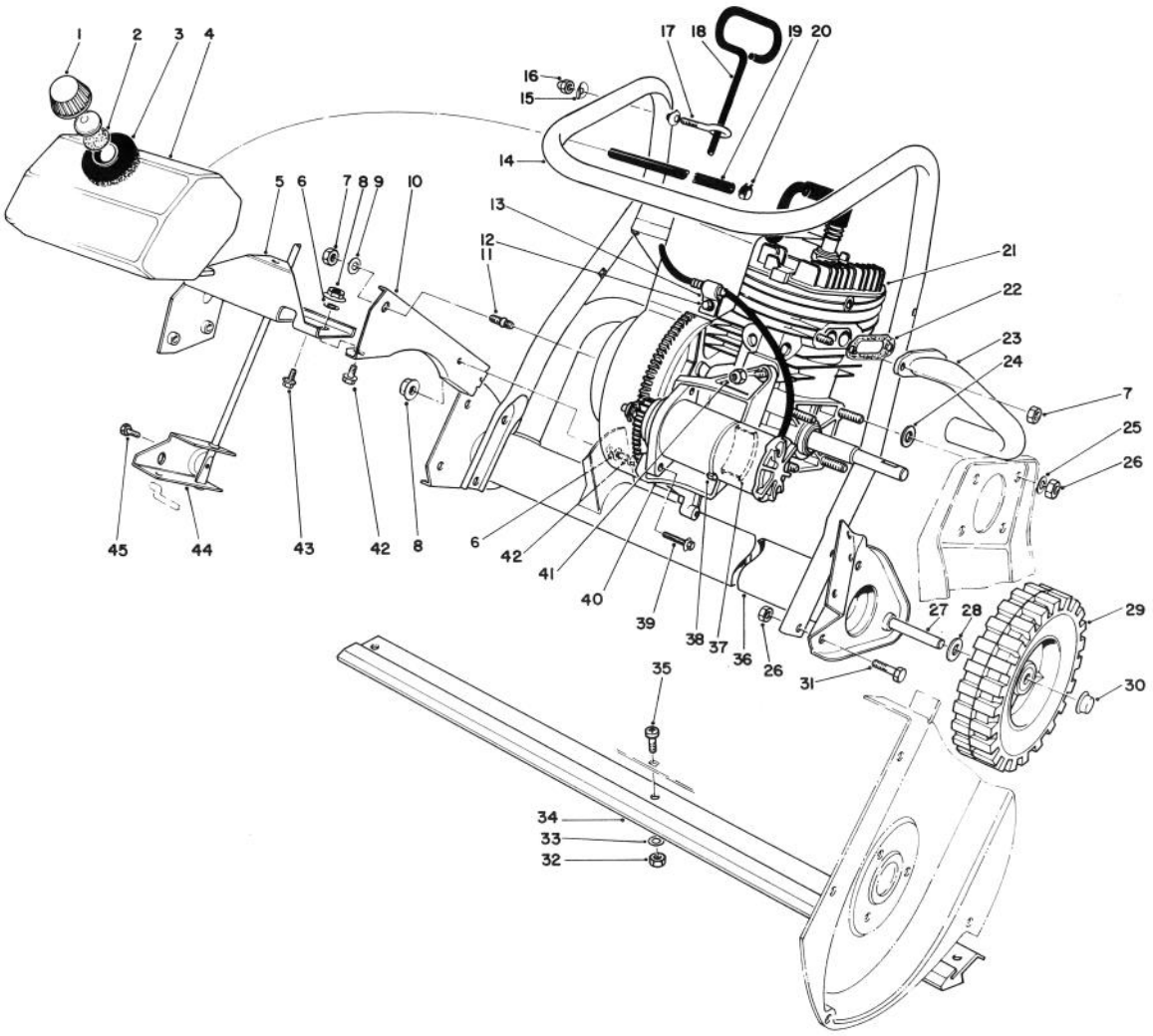

ENGINE ASSEMBLY (MODEL NO. 38115C)

Ref. No.	Part No.	Description	No. Used
1	42-0680	Gas Cap Assembly (Incl. Ref. #2)	1
2	20-4620	Gasket — Gas Cap	1
3	25-1610	Foam Pad	1
4	39-8670	Gas Tank	1
5	49-1550	Support — Gas Tank	1
6	3290-244	Washer — External & Internal Tooth	2
7	32152-4	Nut — Lock	3
8	32128-30	Nut — Flange	2
9	7-3315	Spacer	1
10	49-1570	Support — Engine	1
11	38-8710	Stud	1
12	32144-10	Screw — Thread Forming	1
13	2412-65	Cable Clamp	1
14	49-1360	Lower Handle Assembly	1
15	3-7501	Washer — Handle	2
16	32111-7	Nut — Cap	1
17	52-7120	Eyebolt	1
18	49-1600	Rod — Vane Adjustment	1
19	49-2480	Gas Line	1
20	2412-86	Fuel Hose Clamp	2
21		Engine	1
22	23-3810	Gasket — Exhaust Pipe	1

Ref. No.	Part No.	Description	No. Used
23	52-7200	Exhaust Pipe	1
24	4-2390	Washer	4
25	3256-23	Washer — Flat	4
26	3296-29	Nut — Lock	10
27	27-0060	Axle	1
28	3256-24	Washer — Flat	2
29	23-3250	Wheel	2
30	3290-320	Retainer — Push On	2
31	322-3	Screw — Cap Hex Hd.	6
32	3296-56	Nut — Lock	3
33	3256-22	Washer — Flat	3
34	23-3170	Scraper	1
35	52-7130	Screw — Button Hd. Carriage	3
36	49-1540	Exhaust — Muffler Assembly	1
37	28-9120	Motor Support — Rear	1
38	3290-379	Strap — Motor Tie Down	1
39	32144-26	Screw — Thread Forming	2
40	51-2990	Bracket — Motor Mounting	1
41	3296-42	Nut — Lock	3
42	3234-23	Screw — Flange	2
43	32144-4	Screw	3
44	39-0840	Bracket — Vane Adjustment	1
45	32144-1	Screw — Special	1
*	12-4309	Loose Parts	1

* Not Illustrated

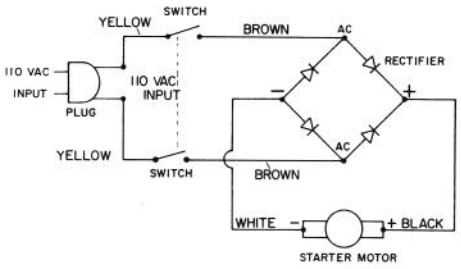

STARTER MOTOR SWITCH ASSEMBLY (MODEL NO. 38115C)

Ref. No.	Part No.	Description	No. Used
1	38-8370	Plug	1
2	61-4830	Plastite Screw	4
3	61-4840	Cap — Switch Housing	1
4	36-8350	Boot — Switch	1
5	36-8340	Switch	1
6	36-8360	Wire — Switch to Rectifier	2
7	37-7600	Bridge Rectifier	1
8	61-4850	Base — Switch Housing	1
9	33-5130	Cable Cover	1
10		Starter Motor	1
11	5-6530	Clip — Retaining	1
12		Helix Pinion Nut	1

Ref. No.	Part No.	Description	No. Used
13	25-3400	Ring — Rubber	1
14		Pinion	1
15	33-5570	Washer	1
16	33-3230	Spring	1
17	33-3210	Pinion Stop	1
18	32151-49	External Retaining Ring	1
*	28-9140	Starter Motor Assembly (Incl. Ref. #10-18)	1
*	36-5350	Pinion Assembly (Incl. Ref. #11-14)	1
*	28-9170	Cord — 7 ft.	1

* Not Illustrated

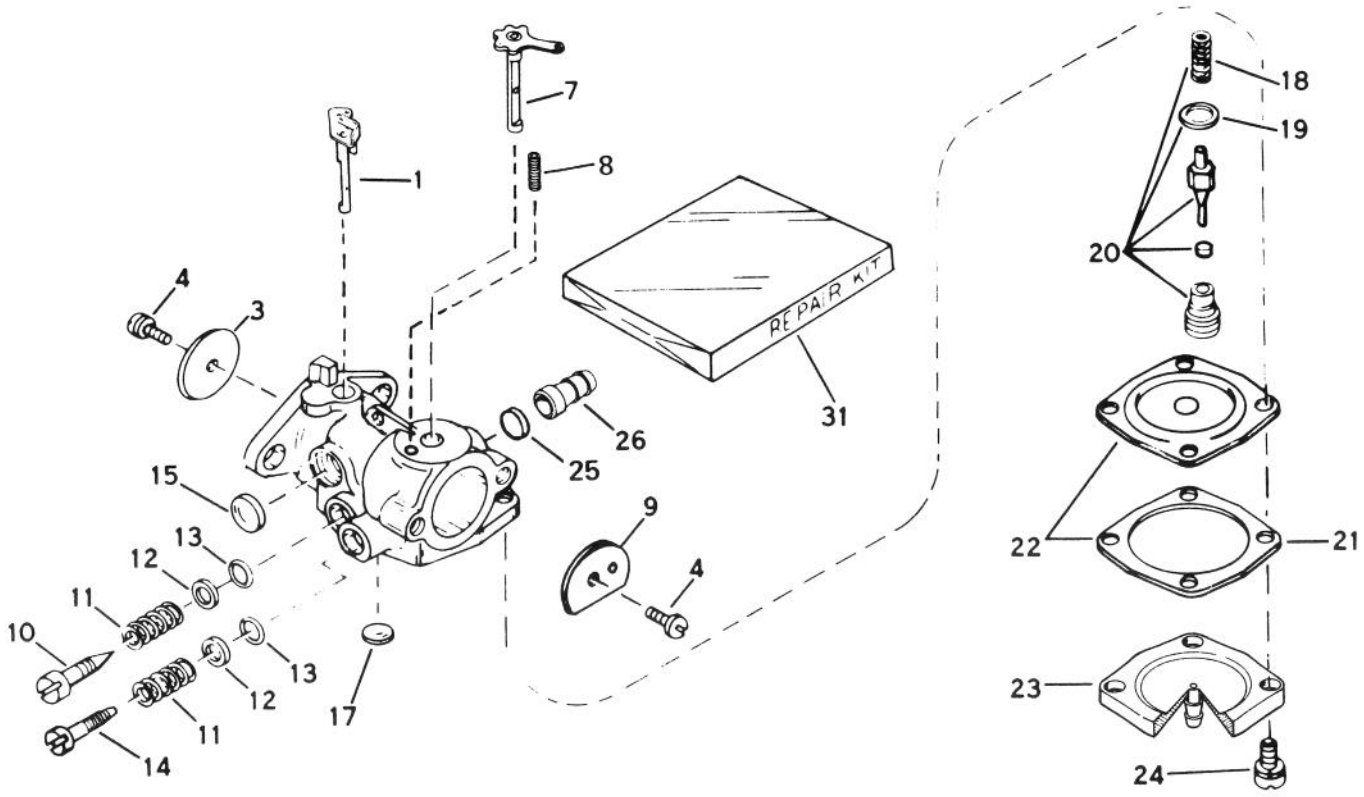

CARBURETOR NO. 632142A

Ref. No.	Part No.	Description	No. Used
1	632130	Shaft & Lever Assy. — Throttle	1
3	631036	Shutter — Throttle	1
4	650506	Screw — Throttle & Choke Shutter	1
7	631888	Shaft & Lever Assy. — Choke	1
8	630735	Spring — Choke Positioning	1
9	31837	Shutter — Choke	1
10	631562	Screw — Idle Adjustment	1
11	630738	Spring — Adjustment Screw	1
12	630739	Washer — Adjustment Screw	1
13	*630740	"O" Ring — Adjustment Screw	1
14	630898	Screw — Main Adjustment	1
15	*630748	Plug — Welch	1

Ref. No.	Part No.	Description	No. Used
17	*630746	Plug — Welch	1
18	631049	Spring — Valve	1
19	630742	Gasket — Valve Seat	1
20	*630932A	Inlet Needle — Seat, Spring & Gasket Assy. (Incl. #18 & 19)	1
21	630750	Gasket — Diaphragm	1
22	*630978	Diaphragm Assy. (Incl. Ref. #21)	1
23	632127	Cover — Diaphragm	1
24	650817	Screw — Diaphragm Cover	1
25	632163	Disk	1
26	632164	Fitting — Fuel Inlet	1
31	631893	Repair Kit (Incl. Items Marked *)	1

*Indicates Parts Included in Repair Kit Ref. #31.

ENGINE TECUMSEH MODEL NO. AH-600 TYPE 1623-N

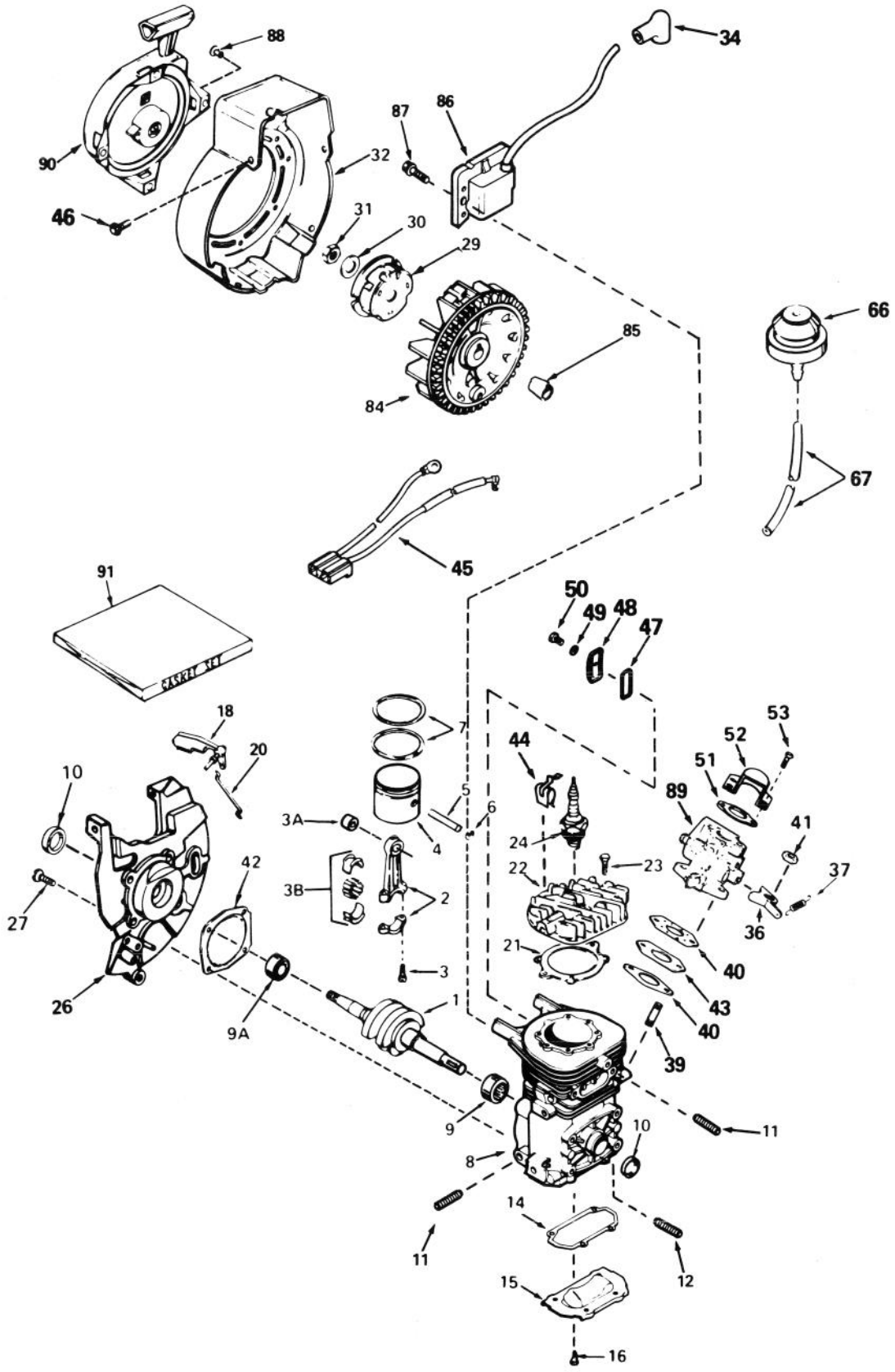

ENGINE TECUMSEH MODEL NO. AH-600 TYPE 1623-N

Ref. No.	Part No.	Description	No. Used
1	290607	Crankshaft	1
2	310235B	Rod Assy. — Connecting (Incl. Ref. #3, 3A & 3B)	1
3	650633	Screw — Connecting Rod	2
3A	530104A	Bearing — Cartridge	1
3B	530150	Bearing & Liner Set — Needle (37 needles)	1
4	310283	Piston	1
5	310264	Pin — Piston	1
6	310167	Ring — Piston Pin Retaining	2
7	310190	Ring Set — Piston	1
8		Block Assy. — Cylinder (Order short block if replacement is required.)	1
9	530105	Bearing — Needle	1
9A	530110	Bearing — Ball	1
10	510319	Seal — Crankshaft	2
11	650883	Stud	5
12	650796	Stud	4
14	*510323	Gasket — Cover	1
15	570644	Plate — Cover	1
16	650579	Screw — Pan Flex Hd.	4
18	490291A	Vane Assy. — Air	1
20	490294	Link — Governor	1
21	*510274	Gasket — Cylinder Head	1
22	250240A	Head — Cylinder	1
23	650477	Screw — Pan Flex Hd.	5
24	611049	Plug — Spark (RCJ-8Y or equivalent)	1
26	350421	Base Assy. — Blower Housing (Incl. Ref. #10)	1
27	650911	Screw — Torx Pan Hd.	4
29	590551	Cup — Starter	1
30	650815	Washer — Spring	1

Ref. No.	Part No.	Description	No. Used
31	650390	Nut — Flywheel	1
32	350399	Housing — Blower	1
34	610118	Cover — Spark Plug	1
36	570645	Lever — Adjusting	1
37	570646	Spring — Adjusting Lever	1
39	650527	Stud — Carburetor	2
40	*510326	Gasket — Carburetor	2
41	650457	Nut — Hex	2
42*	510292	Gasket — Housing Base	1
43	570438A	Spacer	1
44	29443	Clip — Spring	1
45	611131	Harness — Wire	1
46	650356	Screw — Hex Washer Hd. Powerlok Thread	3
47	*510325	Gasket — Cover	1
48	570647	Cover Assy. — Compression Release	1
49	650838	Washer — Flat No. 10	1
50	650579	Screw — Pan Flex Hd.	1
51	510206	Gasket	1
52	570434	Baffle — Air	1
53	650229	Screw — Rd. Hd. Sems	2
66	570629A	Primer Assembly	1
67	32180C	Line — Primer	1
84	611050	Flywheel	1
85	611032	Sleeve — Flywheel	1
86	34443A	Solid State Assembly	1
87	650814	Screw — Hex Hd. Sems	2
88		Rivet — Pop (3/16" Dia.) (Can be purchased locally)	4
89	632142A	Carburetor (Incl. Ref. #40)	1
90	590537	Starter Assy. — Rewind	1
91	510324A	Gasket Set (Incl. Items Marked *)	1

*Indicates parts included in Gasket Set, Ref. #91.

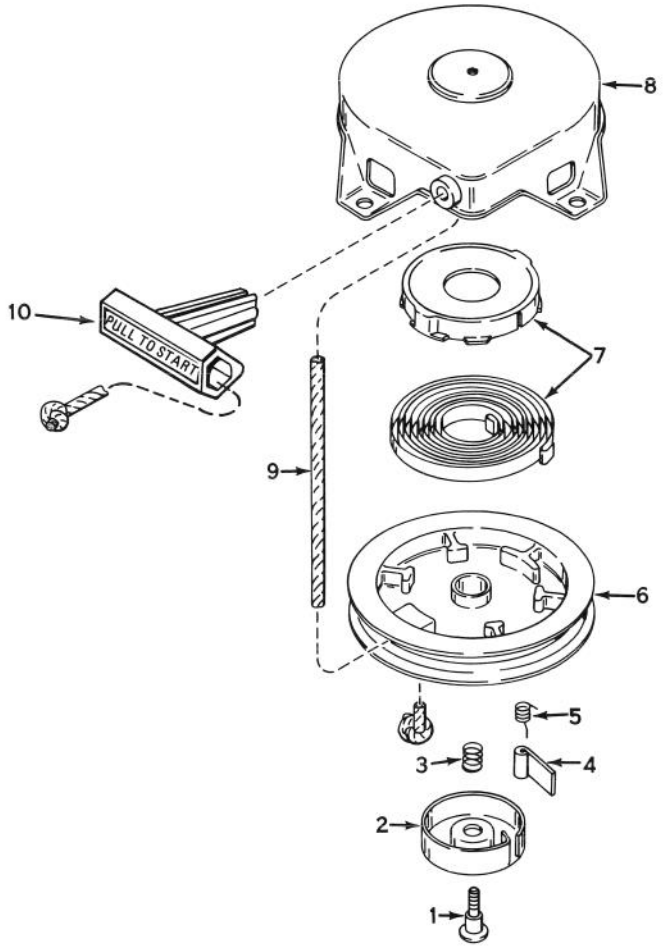

REWIND STARTER NO. 590537

Ref. No.	Part No.	Description	No. Used
1	590409A	Screw — Retainer	1
2	590410	Retainer — R.H.	1
3	590411	Spring — Brake	1
4	590148	Dog — Starter	1
5	590412	Spring — R.H. Dog	1

Ref. No.	Part No.	Description	No. Used
6	590413A	Pulley	1
7	590414	Spring & Keeper Assy.	1
8	590536	Housing Assy. — Starter	1
9	590535	Rope — Starter	1
10	590452	Handle Assy. — Starter	1

IDENTIFICATION AND ORDERING

MODEL AND SERIAL NUMBERS

The Snowthrower has two identification numbers: a model number and a serial number. The two numbers are stamped on a decal which is located on back of the mainframe assembly. In any correspondence concerning the Snowthrower, supply model and serial numbers to assure that correct information and replacement parts are obtained.

To order replacement parts from an Authorized TORO Service Dealer, supply the following information:

1. Model and serial numbers of the Snowthrower.
2. Part number, description, and quantity of part(s) desired.

Note: Do not order by reference number if a parts catalog is being used: use the PART NUMBER.

The Toro Promise

A Two Year Limited Warranty

On All Gasoline Powered Consumer Products

The Toro Company promises to repair your TORO Product if defective in materials or workmanship. The following time periods from the date of purchase apply:

Residential Product ..... 2 Years
Residential Products Used Commercially ..... 45 Days

The costs of parts and labor are included, but the customer pays the transportation costs. Just return any residential product to an Authorized TORO Service Dealer or TORO Distributor.

Should you feel your TORO Product is defective and wish to rely on The Toro Promise, the following procedure is recommended:

1. Contact any Authorized TORO Service Dealer, TORO Master Service Dealer, or TORO Distributor (the Yellow Pages of your telephone directory is a good reference source).
2. He will either instruct you to return the product to him or recommend another Authorized TORO Service outlet which might be more convenient.
3. Bring the product along with your original sales slip, or other evidence of purchase date, to the service dealer.
4. The servicing dealer will inspect the unit, advise you whether the product is defective and, if so, make all repairs necessary to correct the defect without extra charge to you.

If for any reason you are dissatisfied with the dealer's analysis of the defect or the service performed, you may contact us.

Write:

TORO Consumer Service Department
8111 Lyndale Avenue South
Minneapolis, Minnesota 55420

The above remedy of product defects through repair by an Authorized TORO Service Dealer is the purchaser's sole remedy for any defect.

THERE IS NO OTHER EXPRESS WARRANTY. ALL IMPLIED WARRANTIES OF MERCHANTABILITY AND FITNESS FOR USE ARE LIMITED TO THE DURATION OF THE EXPRESS WARRANTY.

Some states do not allow limitations on how long an implied warranty lasts, so the above limitation may not apply to you.

This warranty applies only to parts or components which are defective and does not cover repairs necessary due to normal wear, misuse, accidents, or lack of proper maintenance. Regular, routine maintenance of the unit to keep it in proper operating condition is the responsibility of the owner.

All warranty repairs reimbursable under The Toro Promise must be performed by an Authorized TORO Service Dealer using Toro approved replacement parts.

Repairs or attempted repairs by anyone other than an Authorized TORO Service Account are not reimbursable under The Toro Promise. In addition, these unauthorized repair attempts may result in additional malfunctions, the correction of which is not covered by warranty.

THE TORO COMPANY IS NOT LIABLE FOR INDIRECT, INCIDENTAL OR CONSEQUENTIAL DAMAGES IN CONNECTION WITH THE USE OF THE PRODUCT INCLUDING ANY COST OR EXPENSE OF PROVIDING SUBSTITUTE EQUIPMENT OR SERVICE DURING PERIODS OF MALFUNCTION OR NON-USE.

Some states do not allow the exclusion or limitation of incidental or consequential damages, so the above limitation or exclusion may not apply to you.

This warranty gives you specific legal rights, and you may also have other rights which vary from state to state.

COUNTRIES OTHER THAN THE UNITED STATES OR CANADA

Customers who have purchased TORO products exported from the United States or Canada should contact their TORO Distributor (Dealer) to obtain guarantee policies for your country, province or state. If for any reason you are dissatisfied with your Distributor's service or have difficulty obtaining guarantee information, contact the TORO importer. If all other remedies fail, you may contact us at The Toro Company.

Compliance with Radio Interference Regulations Certified.
Certifie Conforme au Reglement sur le Brouillage Radioelectrique.

MAINTENANCE RECORD
