Form No. 3355–350 Rev A

Hose Adapter Kit

Greensmaster® 3250–D

Part No. 100-6430

Installation Instructions

1. Disconnect the hydraulic hoses from the fittings on the right front cutting unit reel motor (Fig. 1).
2. Remove the straight fitting from the side of the motor (Fig. 1).

Note: On traction units with serial numbers 260000001 or higher, remove the 90 degree fitting from the top of the reel motor.

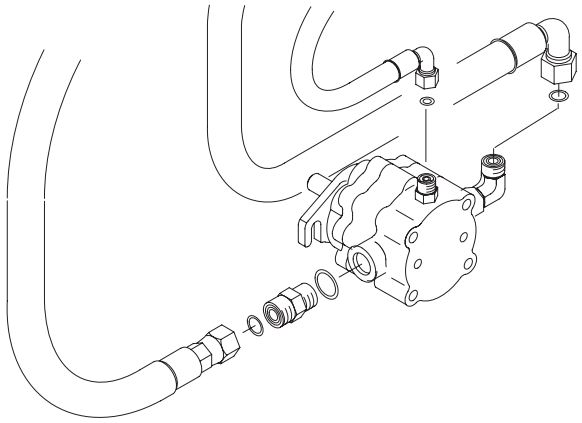

Figure 1

3. Disconnect the other end of the hoses from the bulkhead fittings on the front of the traction unit frame (Fig. 2).

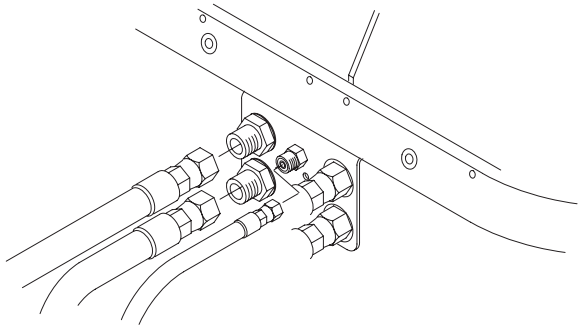

Figure 2

4. On the right front corner of the traction unit frame, measure 1-1/2 inches forward from the center of the reel motor storage tube (Fig. 3). Mark and drill a 9/32 in. dia. hole through one wall of the frame tube.

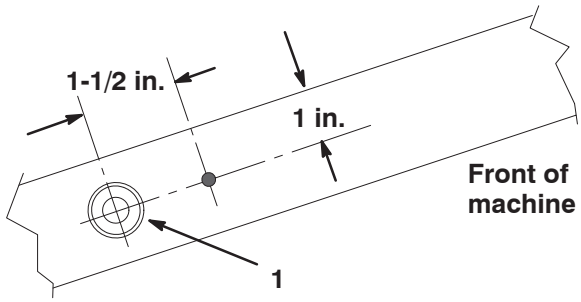

Figure 3

1. Reel motor storage tube

5. Position the hose bracket on the frame, aligning the rear hole of the bracket with the drilled hole in the frame (Fig. 4). Using the bracket as a template, locate, mark, and drill another 9/32 in. dia. hole through one wall of the frame tube.

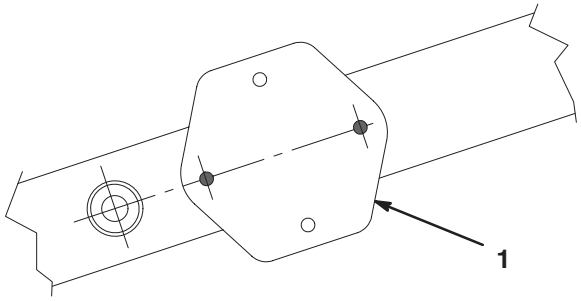

Figure 4

1. Hose bracket

6. Mount the hose bracket to the frame with 2 self tapping screws (5/16 x 5/8 in.).
7. Mount 2 new 90° fittings to the bulkhead fittings on the front of the traction unit frame. Orientate the fittings at shown in Figures 5 and 6.

© 2006 by The Toro Company
8111 Lyndale Avenue South
Bloomington, MN 55420-1196

All Rights Reserved
Printed in the USA

Note: Make sure that the o-rings are in position on all of the fittings when installing.

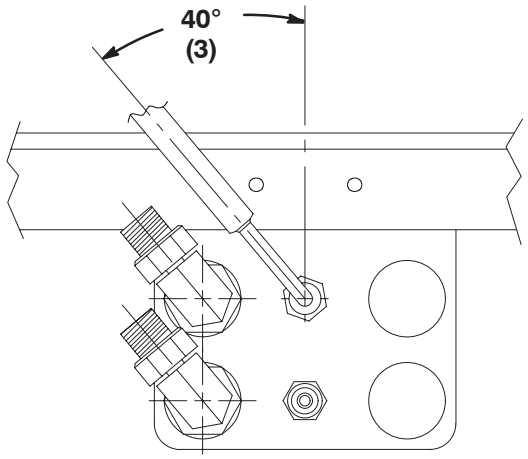

Figure 5

8. Loosely secure 2 new hoses to the 90° fittings and the smaller hose to the bulkhead fitting as shown in Figure 6.

9. Loosely secure the new hoses to the hose bracket with a clamp, 2 spacers, case drain clamp, 2 capscrews, and nuts, positioning them as shown in Figure 6.

10. Mount a new 90° fitting to the side of the cutting unit reel motor (Fig. 6).

Note: On traction units with serial numbers 260000001 or higher, install a new straight fitting to the top of the reel motor.

11. Loosely secure the new hoses to the fittings on the reel motor (Fig. 6).

12. Tighten the capscrews securing the clamps and hoses to the bracket.

13. Tighten all fittings and hoses.

14. Secure the hoses together with a tie wrap (Fig. 6).

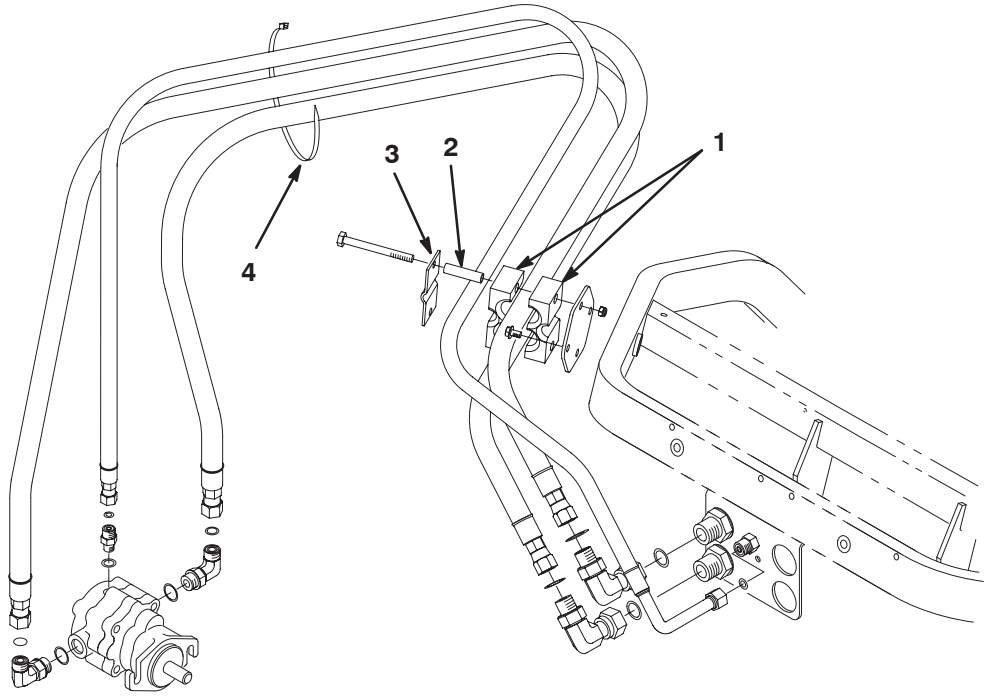

Figure 6

1. Clamp
2. Spacer
3. Case drain clamp
4. Tie wrap

15. Affix a rubber pad to each cutting unit shield. Center the pad on the shield and in front of the lift bail (Fig. 7).

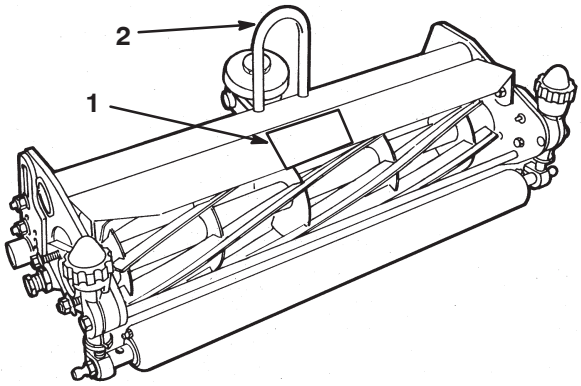

Figure 7

1. Rubber pad
2. Lift bail

16. Depending on the cutting unit mounting position and application, setup and adjust the pull link assemblies using one of the following steps (17, 18, or 19):

17. When the cutting unit is mounted in the **center, right front, or left front** position on the traction unit **without** a groomer installed (Fig. 8):

A. Disconnect, remove, and discard the existing pull link extension from each pull link assembly.

B. Install the new longer pull link extension and adjust each pull link assembly to the dimension shown in Figure 8.

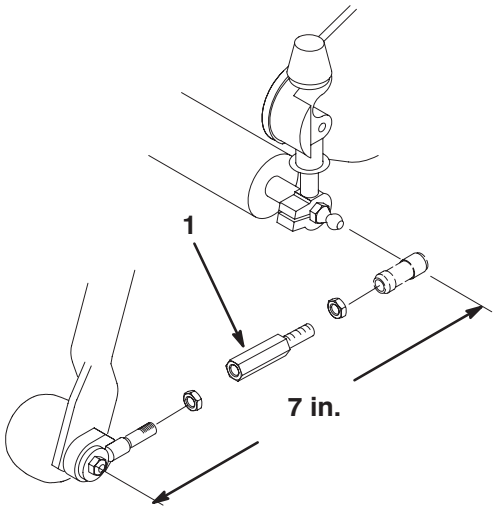

Figure 8

1. Longer pull link extension

18. When the cutting unit is mounted in the **right front or left front** position on the traction unit and a groomer **is** installed (Fig. 9–11):

A. Disconnect, remove, and discard the existing pull link extension from each pull link assembly.

B. Remove the roller shaft and carriage securing the anti-scalp roller to the end of each **front** carrier frame (Fig. 9).

C. Mount the appropriate link bracket (right-hand or left-hand) and an anti-scalp roller to the end of each **front** carrier frame with the roller shaft and carriage bolt previously removed. Position the brackets as shown in Figure 9.

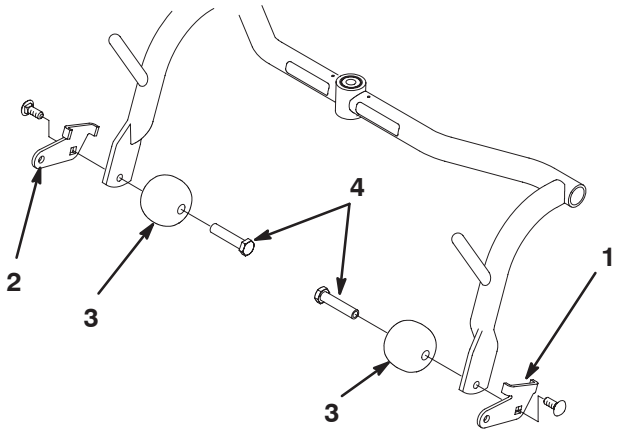

Figure 9

1. Left-hand link bracket
2. Right-hand link bracket
3. Roller
4. Roller shaft

D. Using a new longer pull link extension, mount the pull link assembly to the outside of each link bracket with a capscrew, flat washer, nylon bushing, spacer,

washer, and locknut. Position the components as shown in Figure 10. Make sure that the nylon bushing is in the pull link.

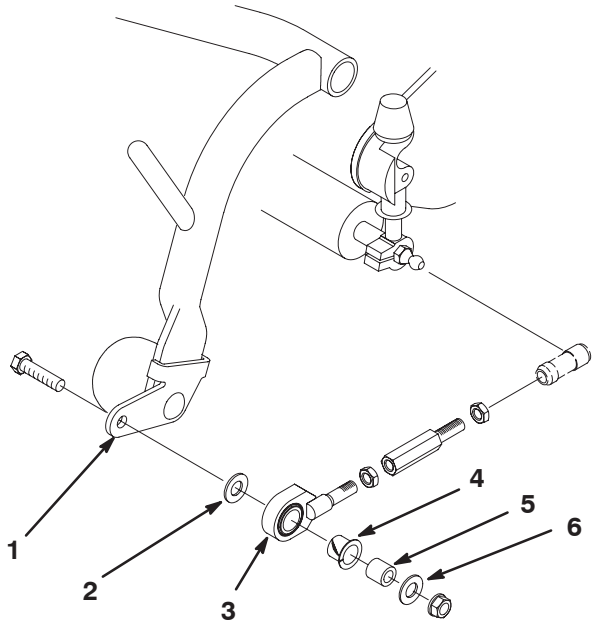

Figure 10

1. Left-hand link bracket
2. Flat washer
3. Pull link assembly
4. Nylon bushing
5. Spacer
6. Washer (thick)

E. Adjust the pull links to the dimension shown in Figure 11.

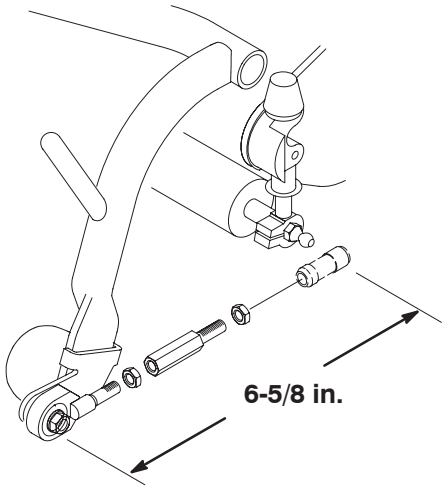

Figure 11

19. When the cutting unit is mounted in the **center** position on the traction unit and a groomer **is** installed:

A. Disconnect, remove, and discard the existing pull link extension from each pull link assembly.

B. Install the new shorter pull link extension and adjust each pull link assembly to the dimension shown in Figure 12.

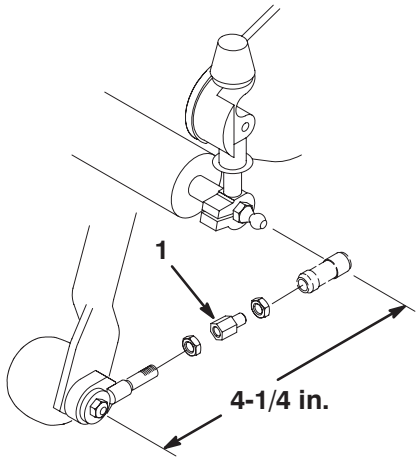

Figure 12

1. Short pull link extension

20. Slide the cutting unit under the pull frame while hooking the hoop onto the lift arm.

21. Slide the sleeve back on each ball joint receiver and hook them onto the cutting unit ball studs. Install ball studs if they are not on the cutting unit.

Note: If a groomer is installed, make sure that the ball joint receiver is installed on the ball stud at the front roller and not at the upper location on the groomer.

22. Mount the basket onto the carrier frame.

23. Adjust the pull links until there is 1/4 to 3/8 in. clearance between the lip of the basket and the reel blades. Make sure that the basket lips are equidistant from the reel blades all the way across the reel blades.

24. Tighten all fasteners.

25. Coat the spline shaft of the motor with clean grease and install the motor by rotating the motor clockwise so that the motor flanges clear the studs. Rotate the motor counterclockwise until the flanges are encircling the studs and tighten the mounting flange screws.