Form Number 3354-246 Rev B

Workman® 4200 with Bed

Model No. 07365 - 260000001 and up.

Parts Catalog

Ordering Replacement Parts

To order replacement parts, please supply the part number, the quantity, and the description of each part desired.

Understanding Reference Numbers

Each Identified part in an illustration has a reference number. The reference number for a part also appears in the parts list, along with other information about the part.

This catalog uses two special reference number formats, one to indicate parts in a service assembly and another to indicate the quantity of a given part in an illustration.

Service Assembly Reference Numbers

Parts in service assemblies have reference numbers in the form a:b. The a represents the reference number of the entire service assembly and the b represents a sequential number unique to each part within the service assembly.

For example, a wheel assembly might be identified by reference number 6, the tire by 6:1, the valve by 6:2, and the wheel by 6:3. When you order the assembly identified by reference number 6, you receive all parts identified by reference numbers 6:1, 6:2, and 6:3. However, you may also order any part individually. Reference numbers of this type appear in illustrations and in part lists.

Reference Numbers Indicating Quantity

In an illustration, if a reference number indicates more than one part, the reference number has the form nX y. The n represents the quantity of the part, the X is the multiplication symbol, and the y represents the reference number.

For example, in an illustration, the reference number 2X 37 means that two of the parts identified by reference number 37 are indicated.

© The Toro Company - 2006
All Rights Reserved

Register your product at www.Toro.com

Contents

Description	Page
Hood and Bumper Assembly	4
Dash Panel Assembly	5
Steering Assembly	6
Steering Pump Assembly No. 106-6726	8
Steer Cylinder Assembly No. 106-6681	9
Brake Accelerator and Clutch Assembly	10
Master Cylinder Assembly No. 104-6782	11
Hydraulic Brake Assembly	12
Clutch Linkage Assembly	13
Shroud and Seat Assembly	14
LH Seat Assembly	15
RH Seat Assembly	16
Roll-Over Protection System Assembly	17
Front Wheel Assembly	18
Front Differential Assembly No. 93-7054	19
RH Front Brake Assembly No. 87-9170	20
LH Front Brake Assembly No. 87-9180	21
Console Assembly	22
Shift Assembly No. 106-7887	24
Front Suspension Assembly	25
Front Control Arm Assembly	26
Differential Drive Shaft Assembly No. 93-7116	27
Lift Valve and Hydraulic Assembly	28
Control Valve Assembly No. 43-1950	30
Hydraulic Cylinder Assembly No. 106-7939	31
Hydraulic Pump Assembly No. 106-6649	32
Rear Frame Assembly	33
Rear Axle Assembly	34
LH Rear Brake Assembly No. 93-7126	35
RH Rear Brake Assembly No. 93-7125	36
Driveshaft Assembly No. 98-2918	37
Radiator and Hydraulic Pump Assembly	38
Fan and Hydraulic Pump Drive Assembly	39
Tail Light and Fender Assembly	40

Description	Page
Engine Assembly	41
Engine Support Assembly	42
Transaxle Assembly	43
Case Assembly Transaxle Assembly No. 105-4190	44
Gear Shaft Assembly Transaxle Assembly No. 105-4190	45
Countershaft Assembly Transaxle Assembly No. 105-4190	46
Shift Fork Assembly Transaxle Assembly No. 105-4190	47
Differential Gear Assembly Transaxle Assembly No. 105-4190	48
Hydraulic Filter and Relay Assembly	49
Battery Assembly	50
Fuel Tank and Air Cleaner Assembly	51
Air Cleaner Assembly No. 106-2416	52
Bi-directional Over Running Clutch Assembly	53
Full Bed and Side Panel Assembly	54
Cylinder Assembly	55
Crankshaft Assembly	56
Cylinder Head Assembly	57
Manifold Assembly	58
Carburetor Assembly	59
Cam Shaft Assembly	60
Oil Pan Assembly	61
Gear Cover Assembly	62
Gear Housing Assembly	63
Water Pump Assembly	64
Governor Assembly	65
Alternator Assembly	66
Starter Motor Assembly	67
Ignition Assembly	68
Gasket Assembly	69
Attachments and Accessories List	70

Part Description Abbreviations

Part descriptions in this catalog may include the following abbreviations.

AR. . . . . as required
ASM. . . . . assembly
BBC. . . . . blade brake clutch
CARR. . . . . carriage
DEG. . . . . degrees
EXT. . . . . external
FH. . . . . flat head
GA. . . . . gauge
HF. . . . . hex flange
HH. . . . . hex head
HHF. . . . . hex head flange
HHFTF. . . . . hex head flange thread forming
HJ. . . . . hex jam
HLH. . . . . hex lag head
HOC. . . . . height-of-cut
HSBH. . . . . hex socket button head
HSFH. . . . . hex socket flat head
HSH. . . . . hex socket head
HWH. . . . . hex washer head
HWHTF. . . . . hex washer head thread forming
HYD. . . . . hydraulic
INC. . . . . incorporated
LH. . . . . left hand
NI. . . . . nylon insert
NPTF. . . . . national pipe thread fine
PFH. . . . . phillips flat head
PPH. . . . . phillips pan head
PPHTF. . . . . phillips pan head thread forming
PRH. . . . . phillips round head
PTH. . . . . phillips truss head
PTO. . . . . power-take-off
RH. . . . . right hand
ROPS. . . . . roll-over-protection-system
SFH. . . . . slotted fillister head
SHH. . . . . slotted hex head
SHWH. . . . . slotted hex washer head
SPH. . . . . slotted pan head
SQH. . . . . square head
SRH. . . . . slotted round head
STD. . . . . standard
TAP. . . . . self tapping
TTH. . . . . torx truss head

Footnotes

❶ Not illustrated

❷ Not serviced separately

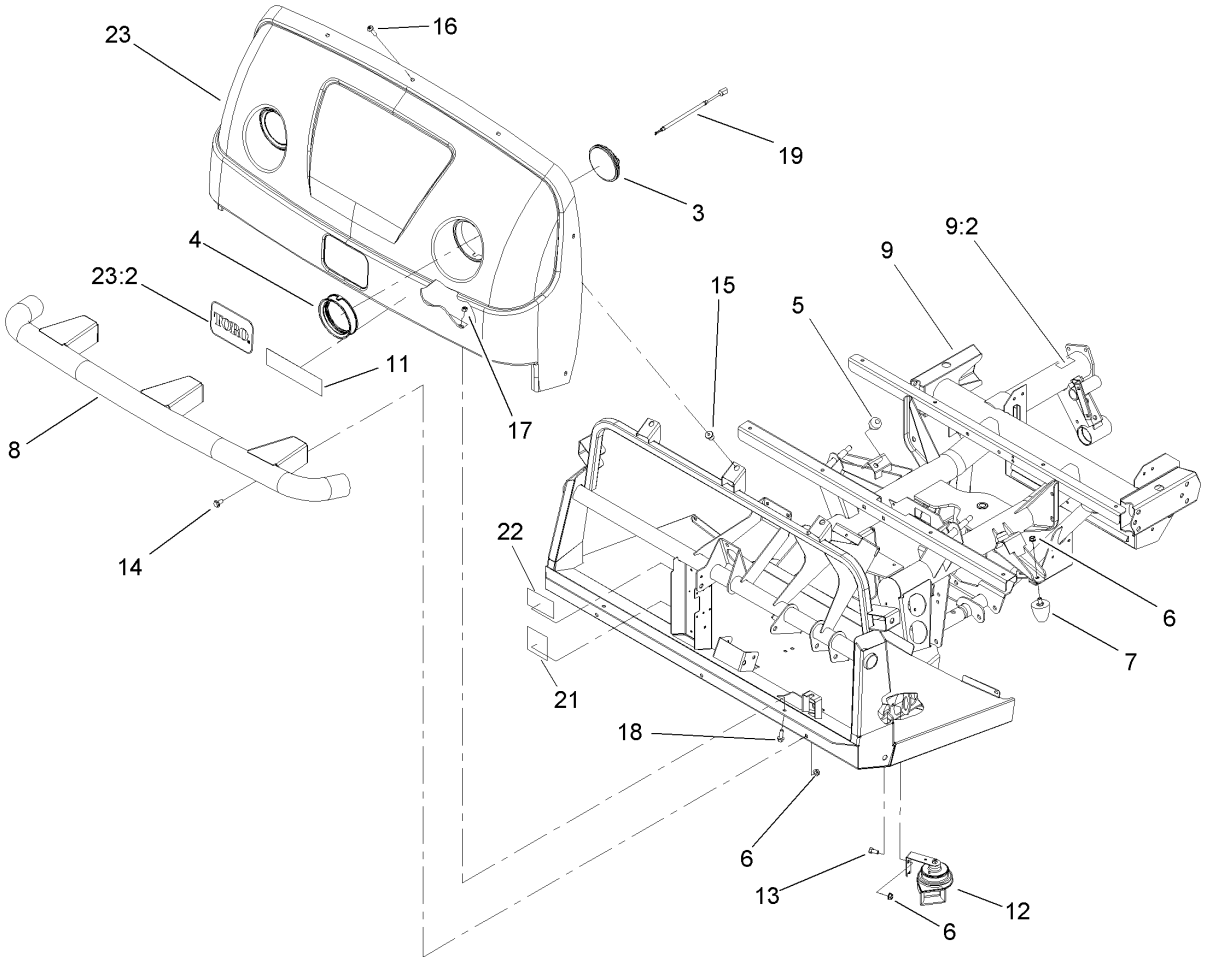

Hood and Bumper Assembly

Ref	Part No.	Qty.	Description
3	99-7310	2	Headlight
4	99-7311	2	Mount-Headlight
5	87-2440	2	Bumper-Rubber
6	3290-357	9	Nut-HHF, Whiz
7	26-0071	2	Snubber-Rubber
8	106-2369-03	1	Bumper ASM
9	106-7884	1	Operator Frame ASM
9:2	93-7814	1	Decal-Danger
11	106-2396	1	Decal
12	116749	1	Horn
13	323-4	1	Screw-HH
14	3234-1	6	Screw-HHF
15	106-7883	7	Nut-Well
16	106-7922	7	Screw-PTH
17	3296-29	2	Nut-Lock, NI
18	3234-29	2	Screw-HHF
19	106-2401	2	Harness-Headlight
21	106-7894	1	Decal-Block, Fuse
22	106-7898	1	Decal-Load Rating
23	107-7979	1	Front Hood ASM
23:2	62-5550	1	Decal

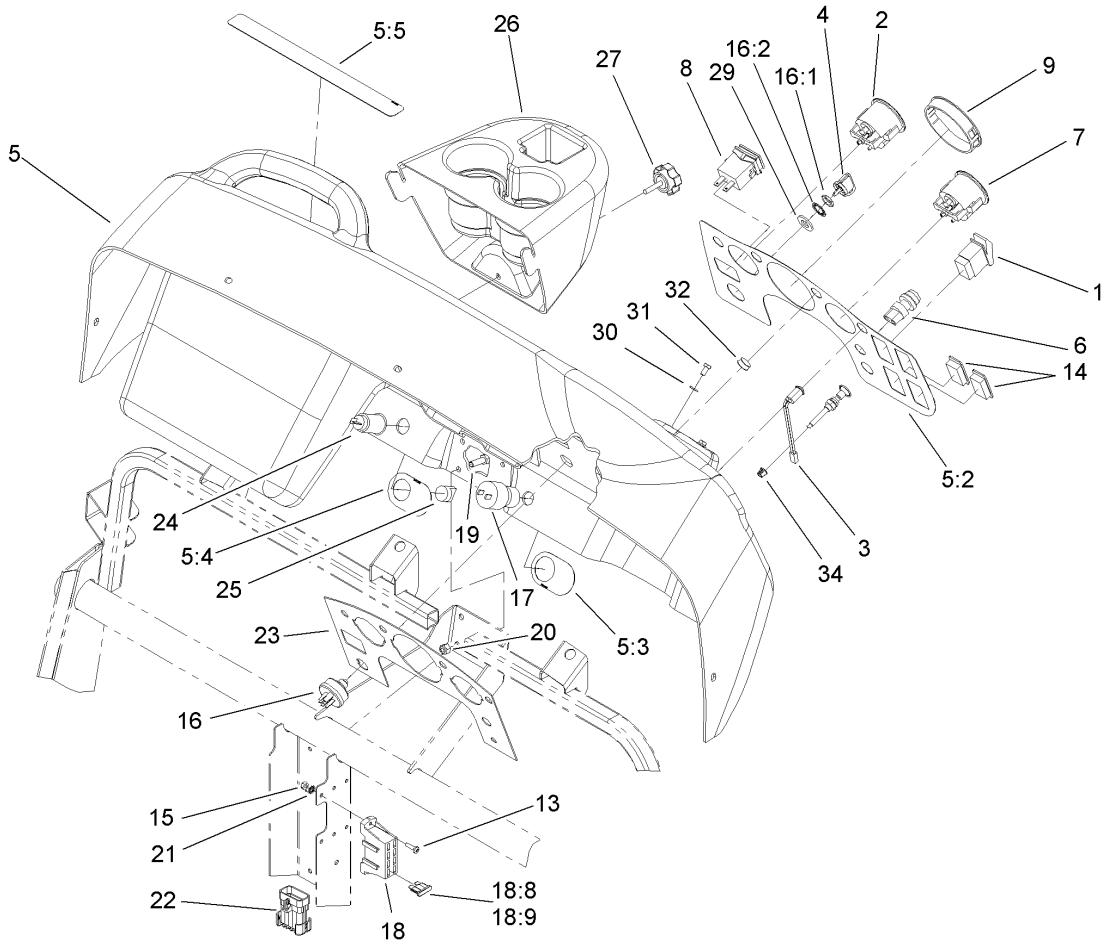

Dash Panel Assembly

Ref	Part No.	Qty.	Description
1	95-8999	1	Switch
2	106-2406	1	Gauge-Temperature
3	95-7652	3	Light-Indicator
4	63-8360	1	Key-Ignition
5	106-7885	1	Dash ASM
5:2	106-2352	1	Decal-Dash
5:3	106-2355	1	Decal-Switch, Supervisor
5:4	106-2353	1	Decal-Powerpoint
5:5	106-2383	1	Decal-Warning, Dash
6	18-2830	1	Button-Horn
7	106-2405	1	Gauge-Fuel
8	94-4208	1	Hourmeter
9	106-2359	1	Plug-Cap
13	32105-13	2	Screw-SHH
14	99-7420	3	Plug-Hole
15	3296-2	2	Nut-Lock
16	27-2360	1	Switch-Key
16:1	218-446	1	Nut-Hex
16:2	218-447	1	Washer-Lock
17	94-5245	1	Switch-Key
18	106-7910	1	Harness-Wire, Front
18:8	218-578	2	Fuse-10 Amp
18:9	109355	2	Fuse-15 Amp
19	322-3	3	Screw-HH

Ref	Part No.	Qty.	Description
20	3296-29	3	Nut-Lock, NI
21	3255-10	1	Washer-Lock / EXT
22	110-2526	1	Harness-Wire, Rear Gas
❶22:1	100-4918	2	Diode
23	106-2360-03	1	Plate-Dash
24	99-7411	1	Point-Power
25	99-7416	1	Cap
26	106-2358	1	Cover-Reservoir
27	105-1406	1	Knob
29	9202624	1	Washer
30	33093-00	2	Washer-Flat
31	33113-012	2	Screw-HH
32	2410-64	1	Plug-Button
34	104-9368	1	Plug-Dome

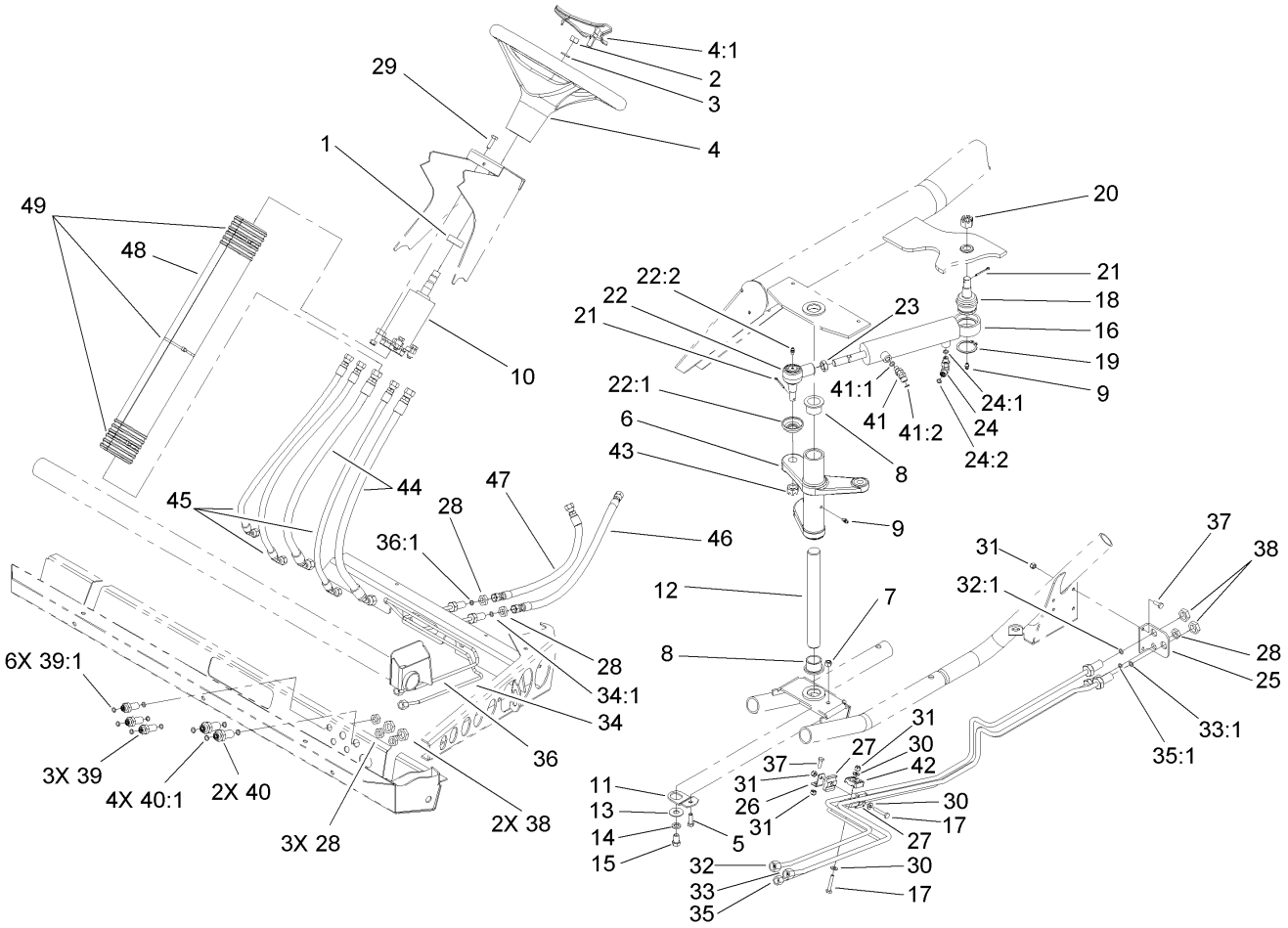

Steering Assembly

Ref	Part No.	Qty.	Description
1	21-9260	1	Cover-Dust
2	3220-6	1	Nut-Jam
3	3253-8	1	Washer-Lock
4	98-1471	1	Wheel-Steering
4:1	98-1468	1	Cover-Wheel, Steering
5	322-5	1	Screw-HH
6	106-2536	1	Arm-Pitman
7	3296-29	1	Nut-Lock, NI
8	94-1291	2	Bushing
9	302-5	2	Fitting-Grease
10	106-6726	1	Steering Pump ASM
11	106-2287	1	Plate
12	106-2271	1	Shaft-Pivot
13	3256-5	1	Washer-Flat
14	3253-6	1	Washer-Lock
15	324-2	1	Screw-HH
16	106-6681	1	Hydraulic Cylinder ASM
17	321-8	2	Screw-HH
18	106-6774	1	Joint-Ball
19	32151-104	1	Ring-Retaining, External
20	32136-14	1	Nut-SHH
21	3272-12	2	Pin-Cotter
22	106-6898	1	Joint-Ball
22:1	106-6896	1	Seal

Ref	Part No.	Qty.	Description
22:2	302-5	1	Fitting-Grease
23	3220-11	1	Nut-Jam
24	340-132	1	Fitting-HYD, 90 DEG
24:1	237-78	1	O-Ring
24:2	237-21	1	O-Ring
25	106-7801-03	1	Bracket-Line, Steering
26	106-7807	1	Bracket-Line, Steering
27	106-7839	2	Clamp-Tube
28	340-78	6	Locknut-Bulkhead
29	33114-020	4	Screw-HH
30	3256-22	3	Washer-Flat
31	3296-42	5	Nut-Lock, NI
32	108-6938	1	Tube-HYD
32:1	237-22	1	O-Ring
33	108-6939	1	Tube-HYD
33:1	237-22	1	O-Ring
34	106-7804	1	Tube-HYD
34:1	237-21	1	O-Ring
35	108-6940	1	Tube-HYD
35:1	237-21	1	O-Ring
36	106-7806	1	Tube-HYD
36:1	237-21	1	O-Ring
37	321-4	3	Screw-HH
38	340-70	4	Nut-Lock

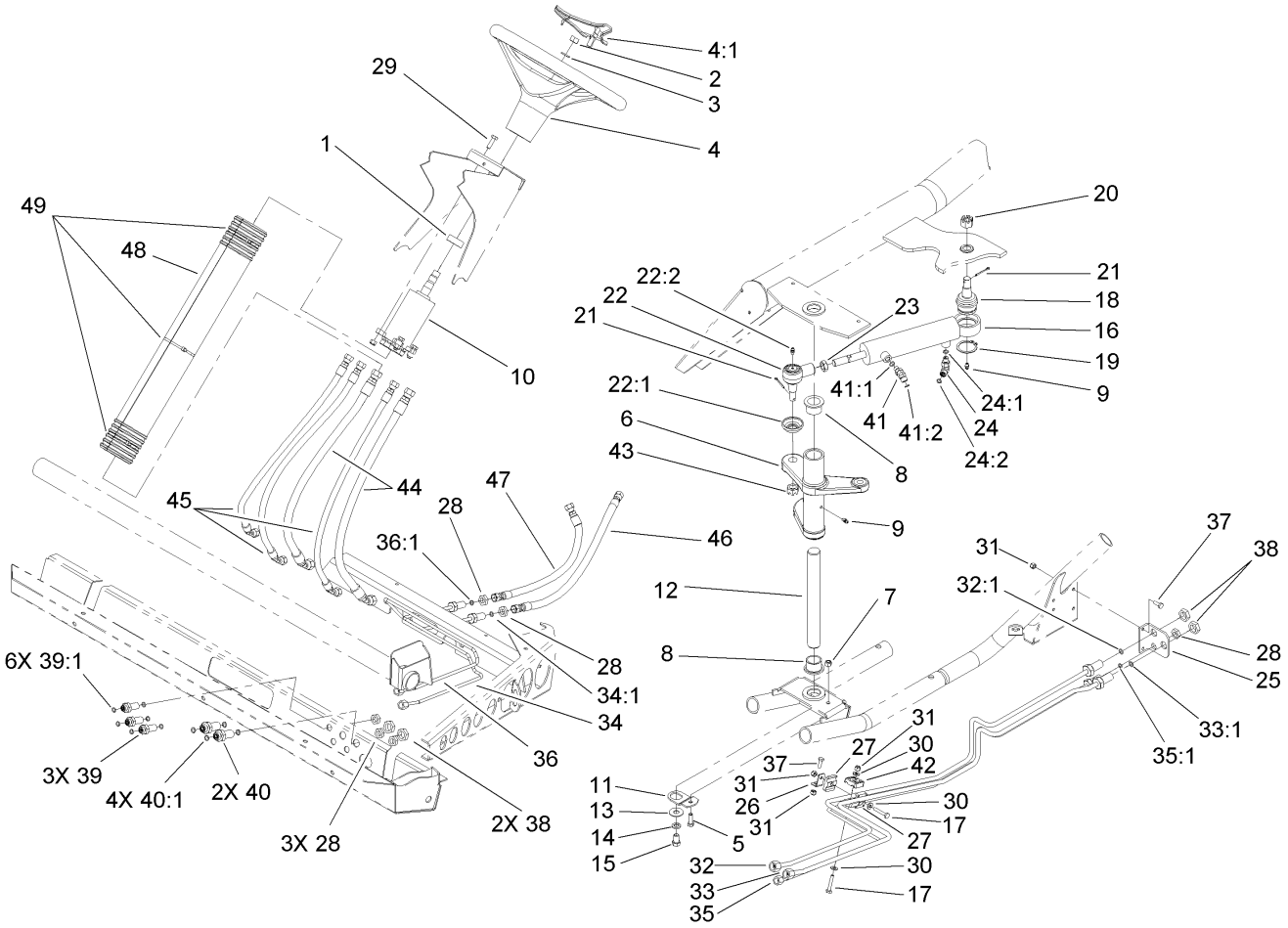

Steering Assembly (continued)

Ref	Part No.	Qty.	Description
39	94-1444	3	Union-Bulkhead
39:1	237-21	2	O-Ring
40	340-71	2	Fitting-Straight, Bulkhead
40:1	237-22	2	O-Ring
41	340-103	1	Fitting-HYD, 45 DEG
41:1	237-78	1	O-Ring
41:2	237-21	1	O-Ring
42	56-7973	2	Clamp-Tube
43	32136-2	1	Nut-SHH
44	106-7975	2	Hose-HYD
45	106-7974	3	Hose-HYD
46	106-7963	1	Hose-HYD
47	106-7962	1	Hose-HYD
48	106-6713	1	Cover-Lines, Steering
49	3290-379	3	Tie-Cable

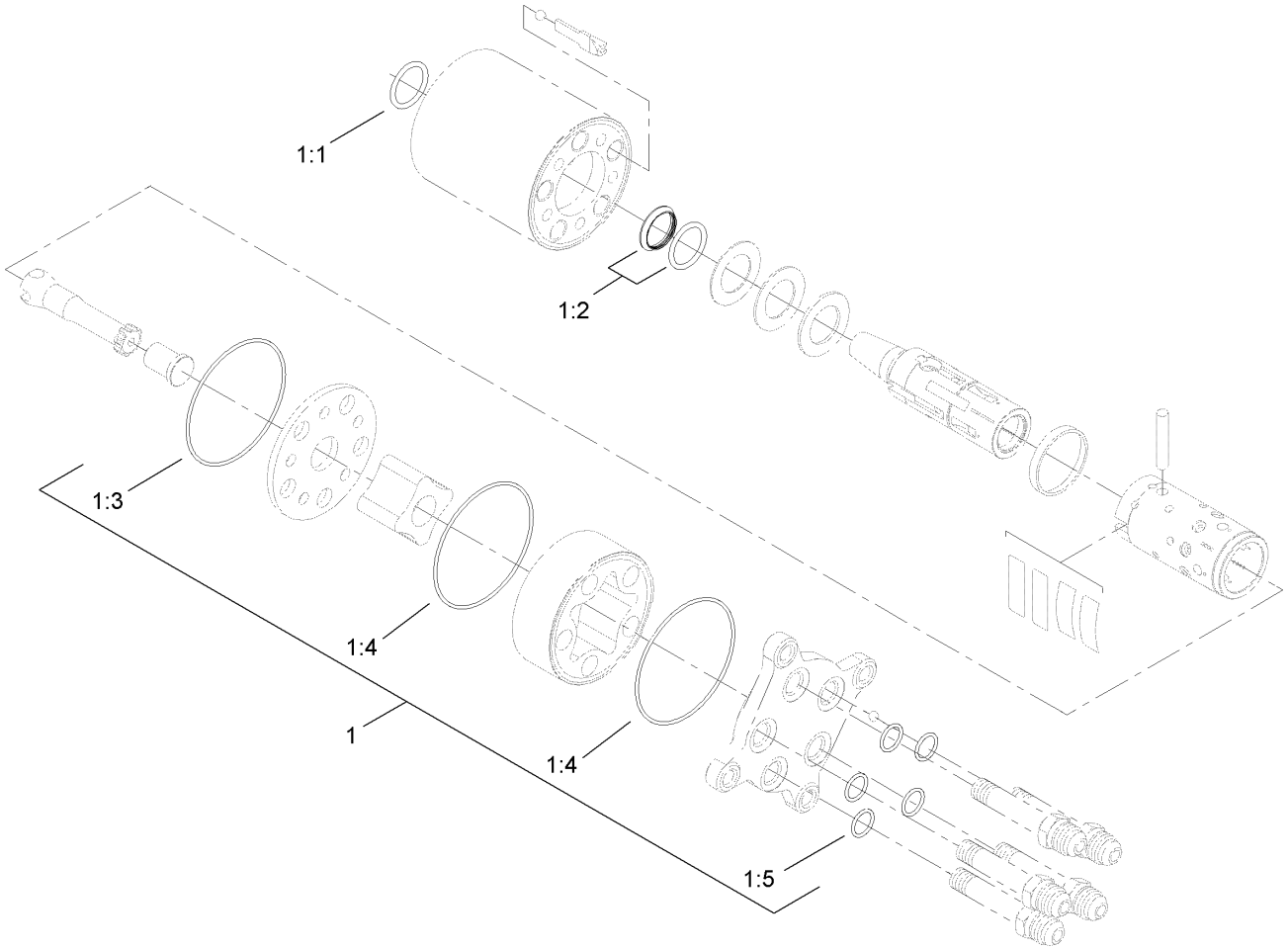

Steering Pump Assembly No. 106-6726

Ref	Part No.	Qty.	Description
1	106-6716	1	Seal Kit
❷1:1		1	Ring-Seal, Dust
❷1:2		1	Seal-Shaft
❷1:3		1	Seal-Dust
❷1:4		2	Seal-Dust
❷1:5		5	Seal-Dust

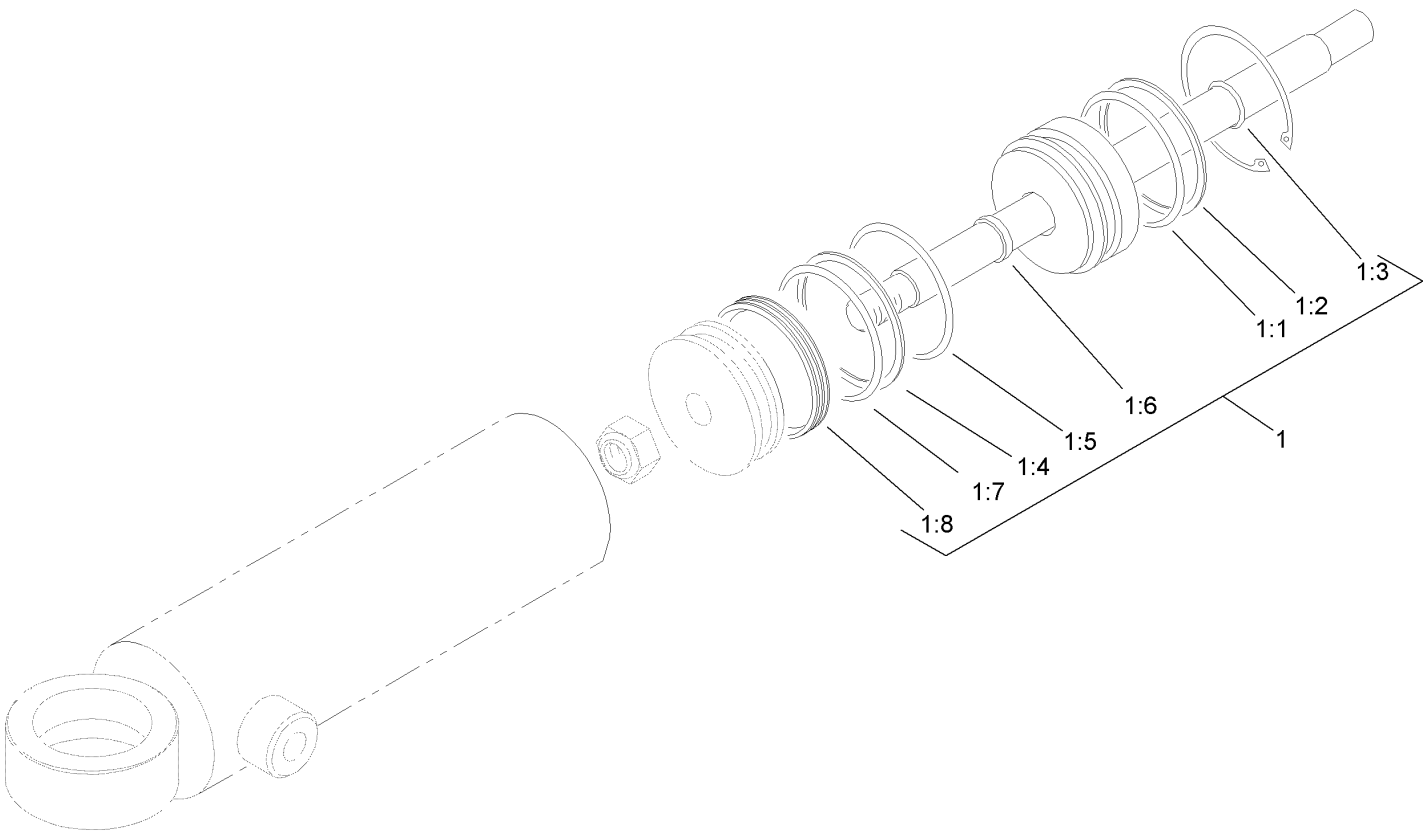

Steer Cylinder Assembly No. 106-6681

Ref	Part No.	Qty.	Description
❶1	106-6712	1	Seal Kit
❷1:1		1	Seal-Dust
❷1:2		1	Seal-Dust
❷1:3		1	Wiper
❷1:4		1	Seal-Dust
❷1:5		1	Back-Up
❷1:6		1	Seal ASM
❷1:7		1	Seal ASM
❷1:8		1	Wear Ring

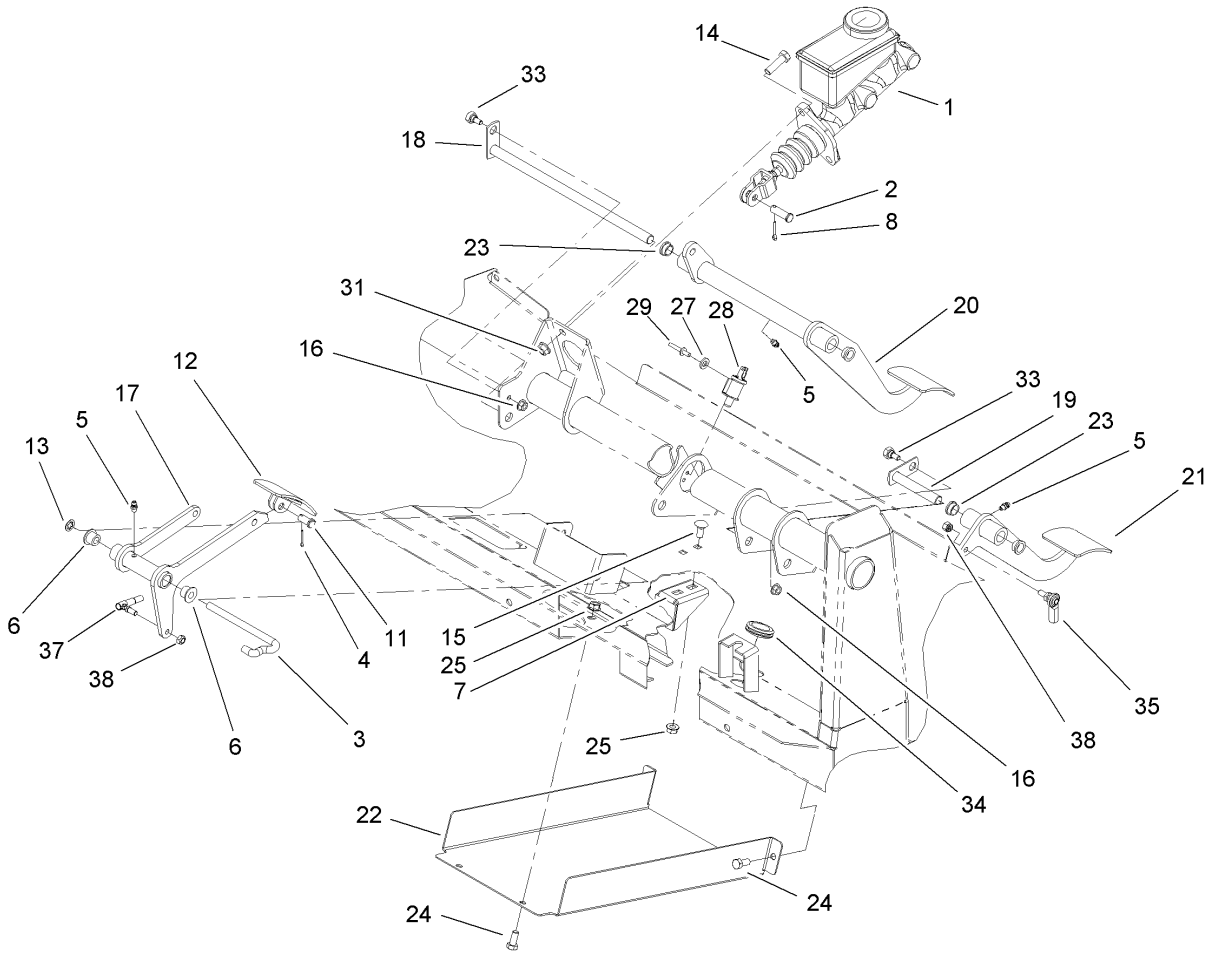

Brake Accelerator and Clutch Assembly

Ref	Part No.	Qty.	Description
1	104-6782	1	Cylinder-Master
2	283-2	1	Pin-Clevis
3	87-2880	1	Shaft-Pedal, Accelerator
4	3272-6	1	Pin-Cotter
5	302-5	3	Fitting-Grease
6	256-259	2	Bushing-Flange
7	106-2421	1	Bracket-Mount, Cable
8	3272-10	1	Pin-Cotter
11	283-85	1	Pin-Clevis
12	93-8969-03	1	Pedal
13	32151-56	1	Ring-Retaining, External
14	323-7	2	Screw-HH
15	3230-1	2	Bolt-CARR
16	32128-33	2	Nut-HF
17	106-2471-03	1	Arm-Pedal, Accelerator
18	106-2475	1	Brake Shaft ASM
19	106-2476	1	Clutch Shaft ASM
20	106-2461-03	1	Brake Pedal ASM
21	106-2457-03	1	Clutch Pedal ASM
22	106-2427-03	1	Cover
23	256-156	4	Bushing-Flange
24	322-3	4	Screw-HH
25	32128-20	6	Nut-HF
27	3256-21	2	Washer-Flat

Ref	Part No.	Qty.	Description
28	95-1653	1	Switch-Pole, Single
29	3290-382	2	Rivet-Pop
31	3290-357	2	Nut-HHF, Whiz
33	63-3410	2	Screw-Shoulder
34	240-5	1	Grommet
35	110-2554	1	Rod End-Spherical
37	18-1720	1	Governor Ball Joint ASM
38	3296-13	2	Nut-Lock NI

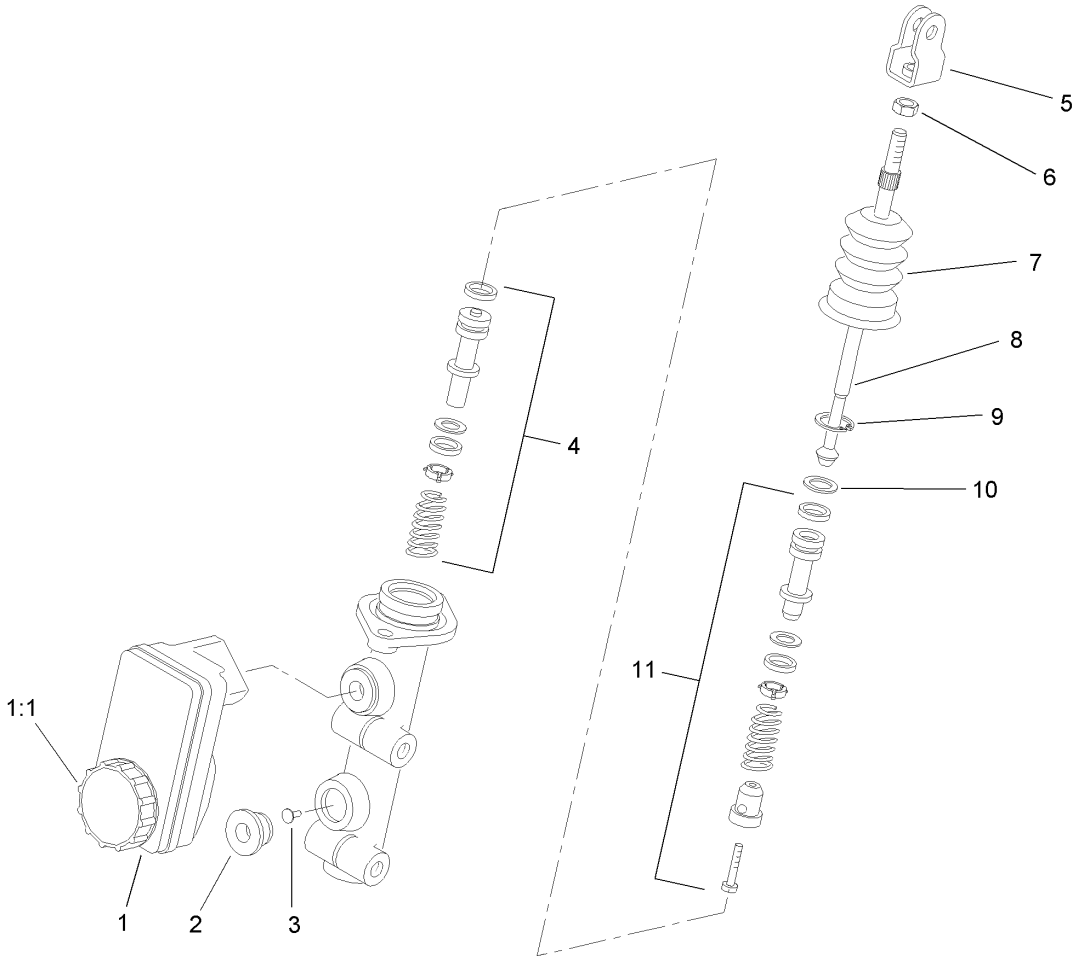

Master Cylinder Assembly No. 104-6782

Ref	Part No.	Qty.	Description
1	104-6845	1	Reservoir ASM
1:1	92-4112	1	Cap ASM
2	93-8971	2	Seal-Port, Flange
3	92-4103	1	Pin-Stop
4	92-4102	1	Secondary Piston ASM
5	92-4110	1	Clevis
6	21-0360	1	Nut-Hex
7	94-5209	1	Cover-Dust
8	94-5210	1	Rod-Push
9	92-4109	1	Ring-Snap
10	92-4108	1	Retainer-Washer
11	92-4101	1	Primary Piston ASM

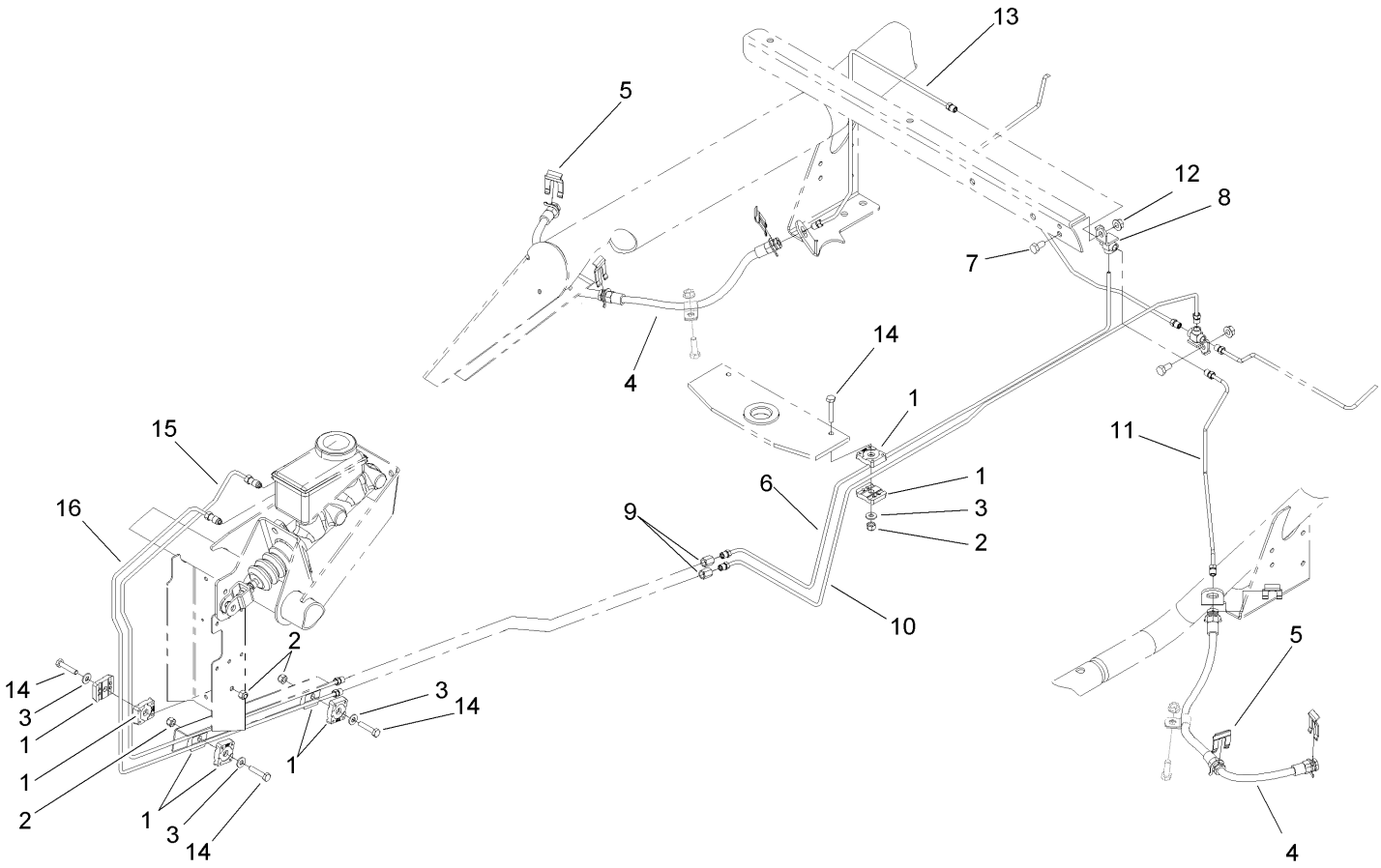

Hydraulic Brake Assembly

Ref	Part No.	Qty.	Description
1	87-7660	8	Clamp-Tube
2	3296-42	4	Nut-Lock, NI
3	3256-22	4	Washer-Flat
4	93-7059	2	Front Brake Hose ASM
5	87-3580	2	Clip-Retainer
6	106-6686	1	Tube ASM
7	322-2	1	Screw-HH
8	87-3560	1	Tee
9	87-3570	2	Union
10	106-6687	1	Tube ASM
11	106-6688	1	Tube ASM
12	32128-20	1	Nut-HF
13	106-6689	1	Tube ASM
14	321-8	4	Screw-HH
15	106-6683	1	Tube ASM
16	106-6684	1	Tube ASM

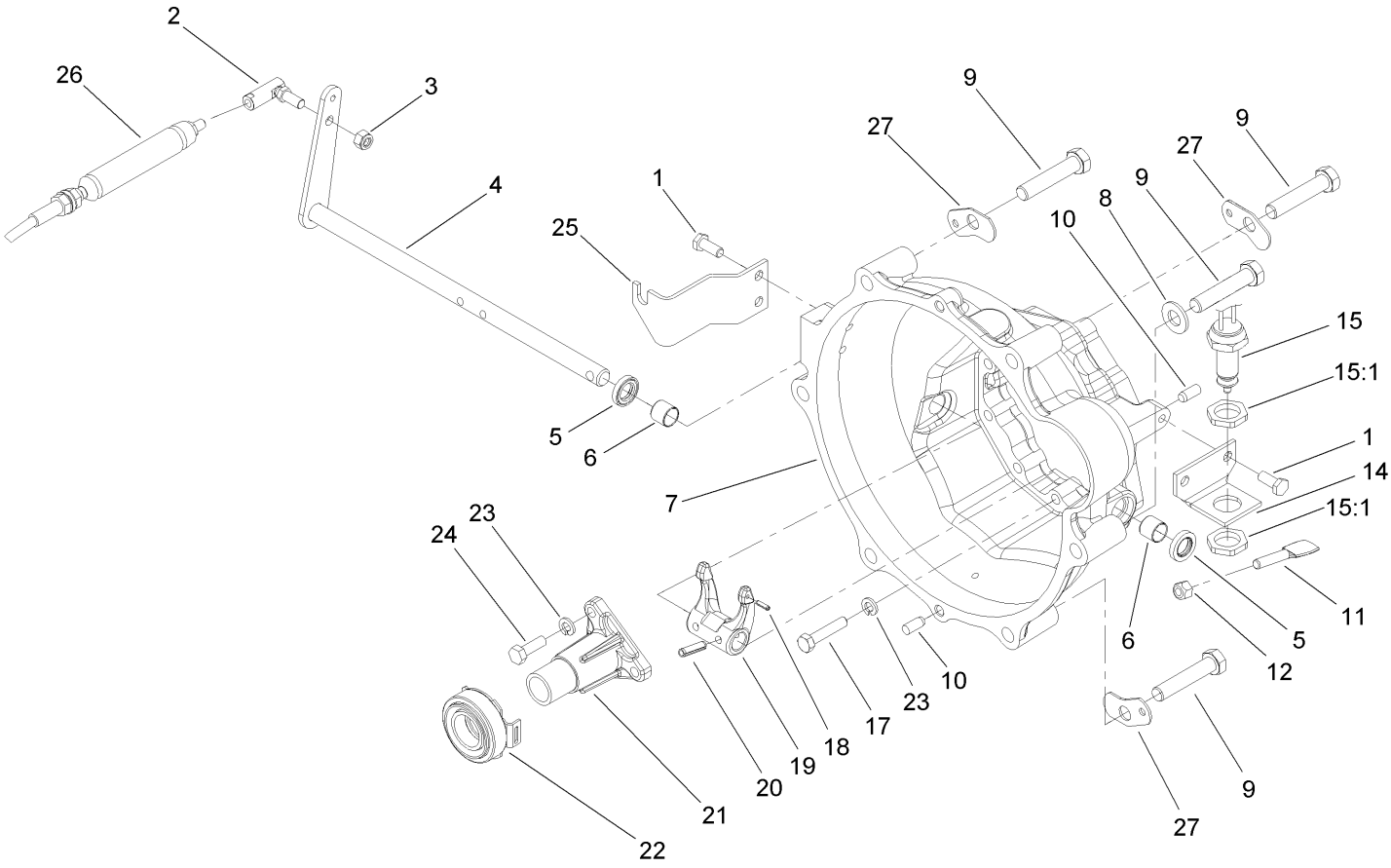

Clutch Linkage Assembly

Ref	Part No.	Qty.	Description
1	33114-020	4	Screw-HH
2	2411-33	1	Balljoint-RH (W/Grommet)
3	3296-4	1	Nut-Lock
4	105-1702	1	Release Shaft ASM
5	87-1920	2	Seal-Oil
6	87-3770	2	Bushing-Housing, Bell
7	104-9249	1	Housing-Bell
8	3256-26	3	Washer-Flat
9	3215-2	6	Screw-HH
10	87-1910	4	Pin-Dowel
11	87-5360	1	Paddle-Clutch, Switch
12	3296-29	1	Nut-Lock, NI
14	87-5350	1	Bracket-Clutch, Switch
15	87-5490	1	Switch-Clutch
15:1	3218-20	2	Nut-Jam
17	33114-040	9	Screw-HH
18	32121-7	1	Pin-Roll, Slotted
19	87-5300	1	Fork-Clutch
20	32121-24	2	Pin-Spring
21	87-5320	1	Release-Guide
22	110-2538	1	Bearing-Release, Clutch
23	3253-4	12	Washer-Lock
24	33114-025	3	Screw-HH
25	106-2523	1	Bracket-Clutch

Ref	Part No.	Qty.	Description
26	110-2548	1	Cable-Clutch
27	87-6410	3	Bracket-Harness

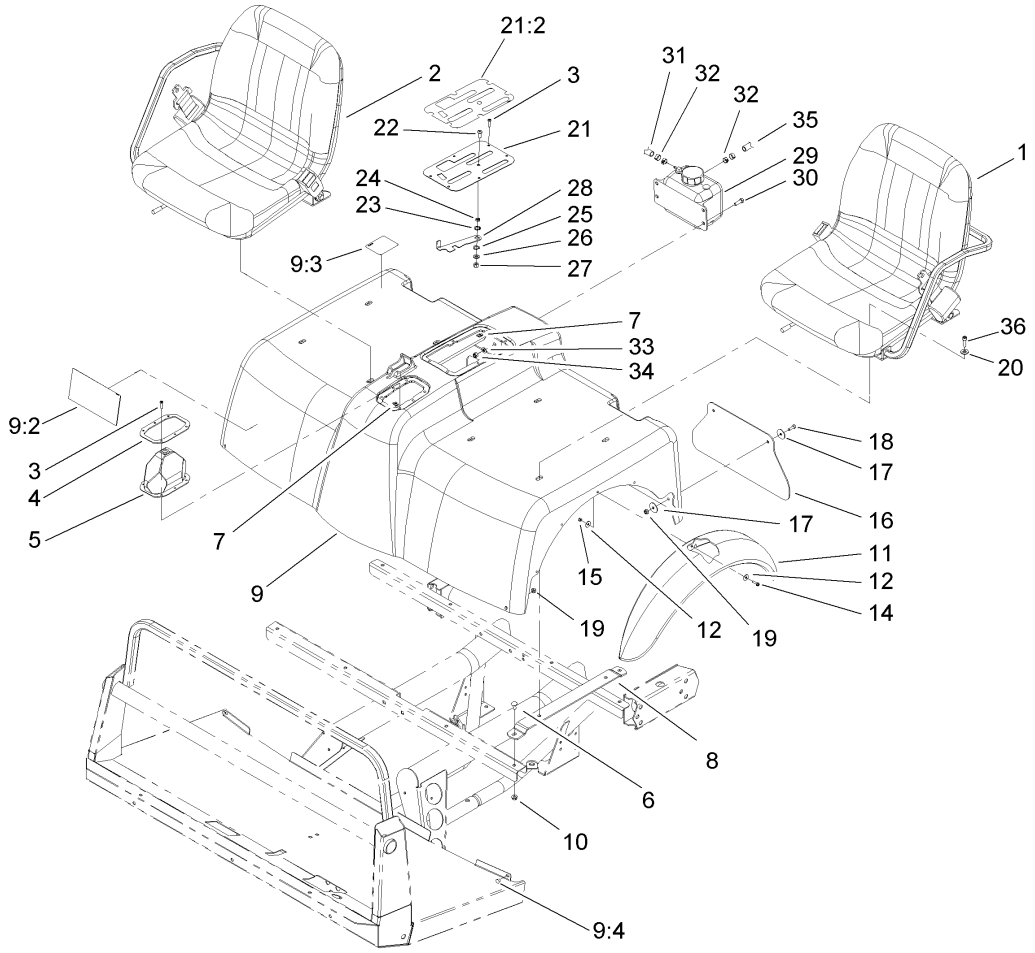

Shroud and Seat Assembly

Ref	Part No.	Qty.	Description
❷1		1	LH Seat ASM
❷2		1	RH Seat ASM
3	32144-36	12	Screw-PPH
4	87-3760-03	1	Plate-Boot, Shift
5	87-8620	1	Shift Boot ASM
6	3230-1	8	Bolt-CARR
7	106-2388	12	Clip-Fastener
8	107-7957-03	4	Seat Bracket ASM
9	106-2362	1	Seatbase ASM
9:2	106-2384	1	Decal-Reference, Quick
9:3	93-9448	1	Decal-Fuel
9:4	107-8042	2	Bumper-Rubber
10	104-8300	8	Nut-Flange, NI
11	106-2375	2	Fender-Front
12	3256-61	20	Washer-Flat
14	32105-13	10	Screw-SHH
15	3296-2	10	Nut-Lock
16	106-2378	2	Mudflap
17	3256-55	8	Washer-Flat
18	321-4	4	Screw-HH
19	3296-16	4	Nut-Lock, NI
20	3256-74	8	Washer-Flat
21	106-7886	1	Control Plate ASM
21:2	106-2377	1	Decal-Console

Ref	Part No.	Qty.	Description
22	3274-55	1	Screw-HSBH
23	82-4240	1	Spacer-Bearing
24	94-8196	1	Washer-Nylon
25	3290-221	1	Washer-Spring
26	3256-23	1	Washer-Flat
27	3296-29	1	Nut-Lock, NI
28	106-7984-03	1	Lever-Detent
29	87-3710	1	Reservoir-Coolant
30	322-5	4	Screw-HH
31	110-4104	1	Hose-Fuel
32	92-2379	2	Clamp-Hose
33	3256-23	4	Washer-Flat
34	3296-29	4	Nut-Lock, NI
35	110-6186	1	Hose-Fuel
36	3274-22	8	Screw-HSH

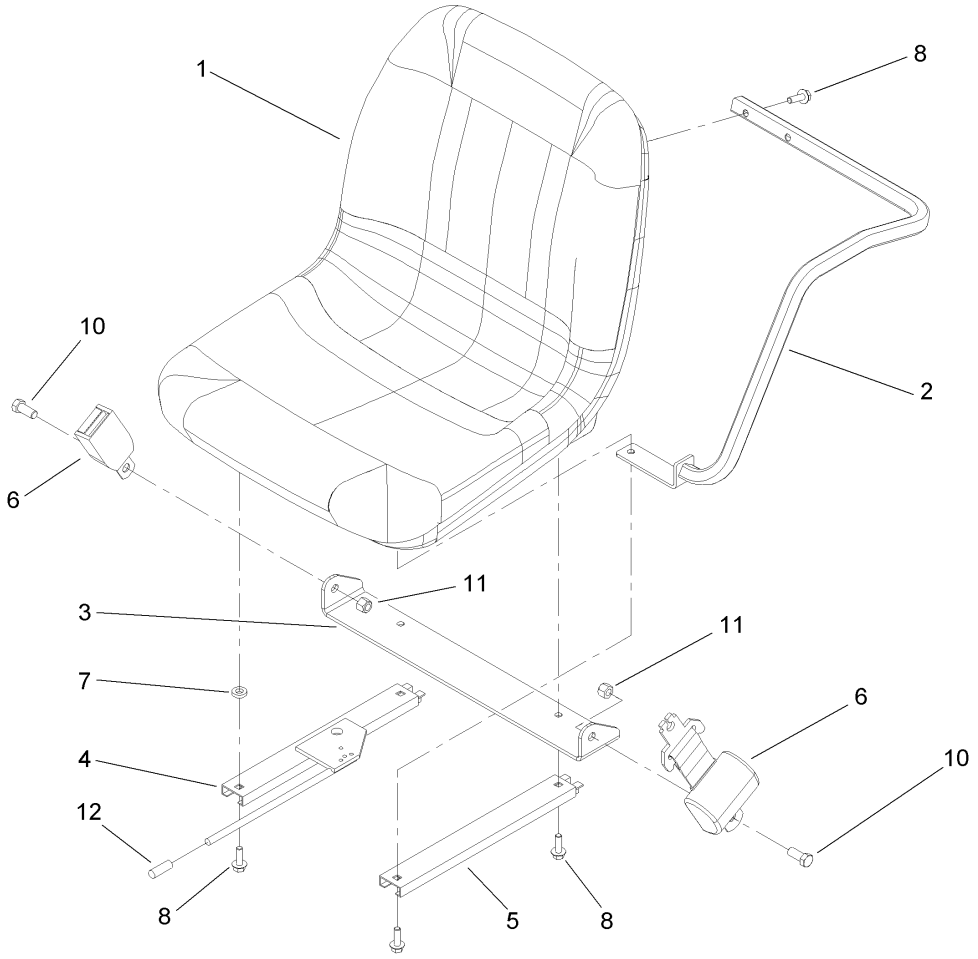

LH Seat Assembly

Ref	Part No.	Qty.	Description
1	106-6672	1	Seat
2	106-7842	1	LH Armrest ASM
3	106-7845	1	Bracket-Belt, Seat
4	106-7847	1	Adjuster-Seat, W/Handle
5	107-7959	1	Adjuster-Slave, 7 Inch
6	106-7848	1	Seat Belt ASM
7	80-7730	1	Spacer
8	3234-29	6	Screw-HHF
10	3212-4	2	Screw-HH
11	3296-7	2	Nut-Lock
12	106-7953	1	Grip-Gray

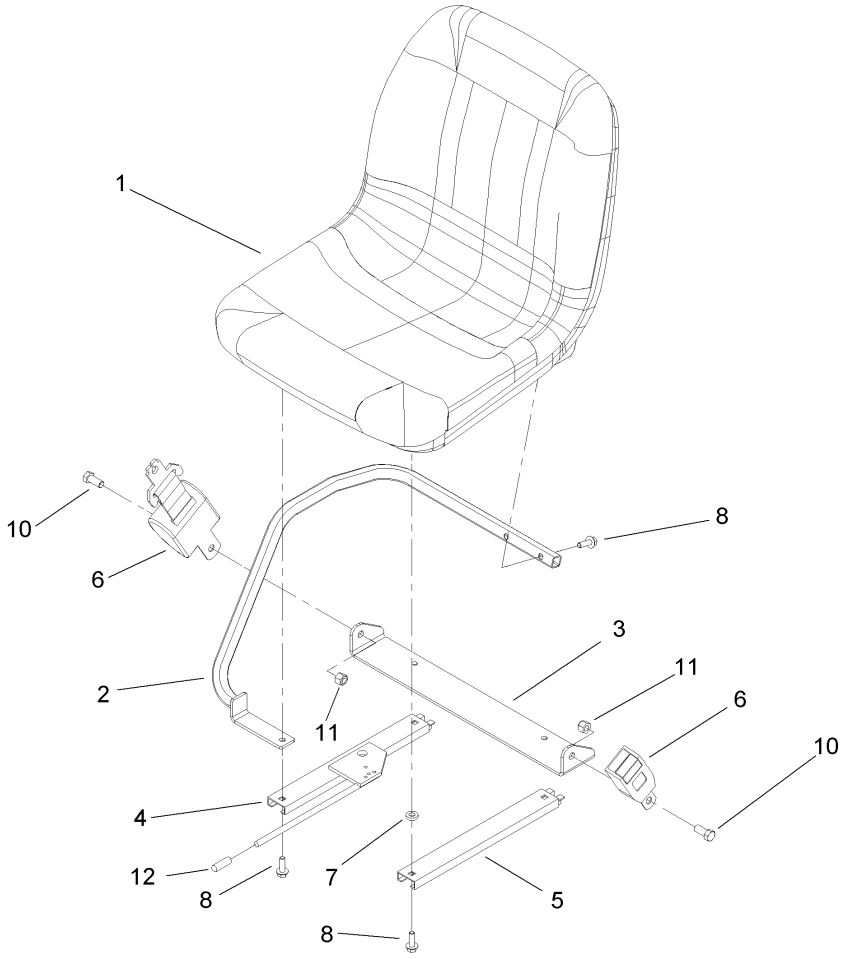

RH Seat Assembly

Ref	Part No.	Qty.	Description
1	106-6672	1	Seat
2	106-7844	1	RH Armrest ASM
3	106-7845	1	Bracket-Belt, Seat
4	106-7847	1	Adjuster-Seat, W/Handle
5	107-7959	1	Adjuster-Slave, 7 Inch
6	106-7848	1	Seat Belt ASM
7	80-7730	1	Spacer
8	3234-29	6	Screw-HHF
10	3212-4	2	Screw-HH
11	3296-7	2	Nut-Lock
12	106-7953	2	Grip-Gray

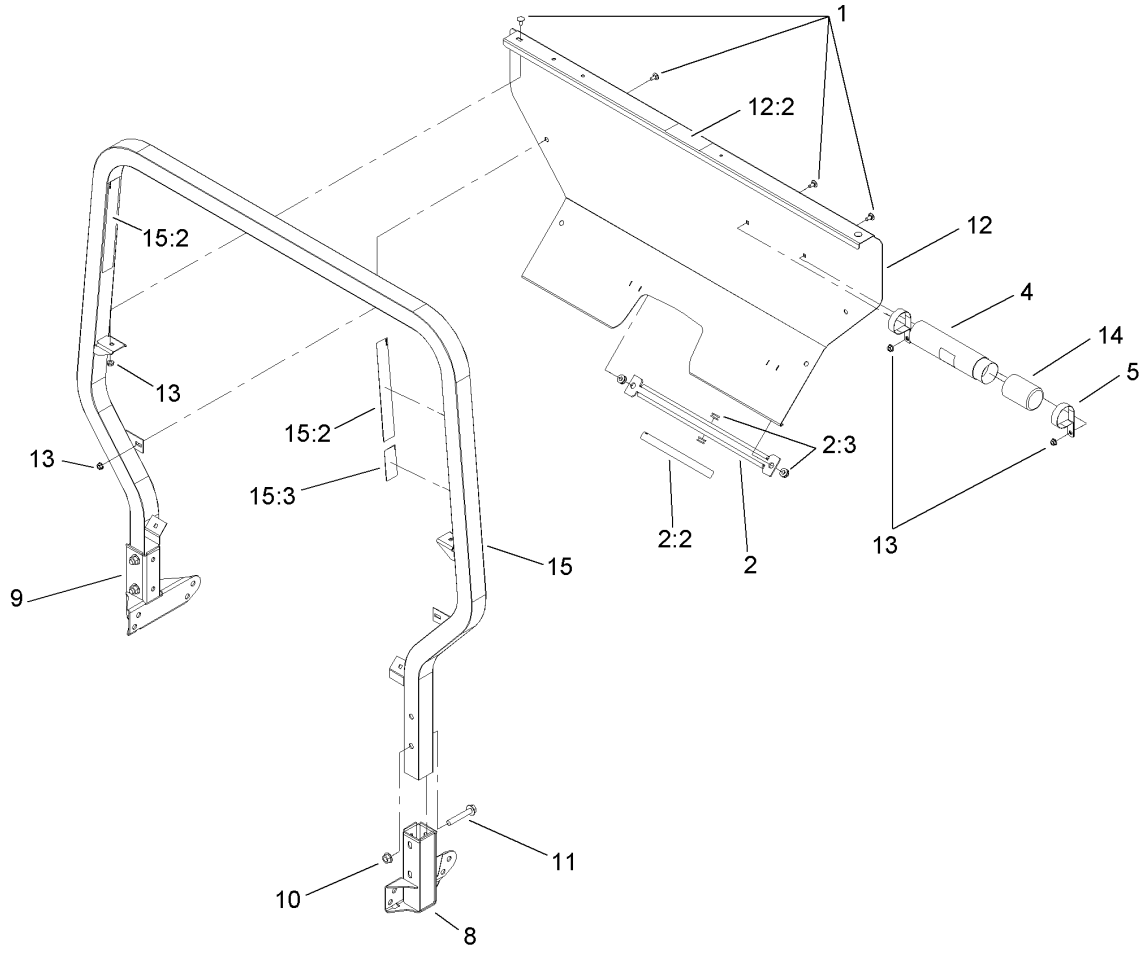

Roll-Over Protection System Assembly

Ref	Part No.	Qty.	Description
1	3230-18	8	Screw-CARR
2	105-7960	1	Bed Support ASM
2:2	93-9852	1	Decal-Warning
2:3	92-5972	4	Grommet-Rubber
4	104-7050	1	Housing-Manual
5	2412-133	2	R-Clamp
8	87-6950-03	1	LH Receiver ASM
9	87-6960-03	1	RH Receiver ASM
10	32128-23	4	Nut-HF
11	3234-40	4	Screw-HF
12	106-2409	1	ROPS Cover ASM
12:2	105-4215	1	Decal-Caution
13	32128-20	8	Nut-HF
14	104-7048	1	Cap-Housing
15	106-2412	1	ROPS ASM
15:2	106-7767	2	Decal-ROPS
15:3	93-9850	1	Decal-Roll Over

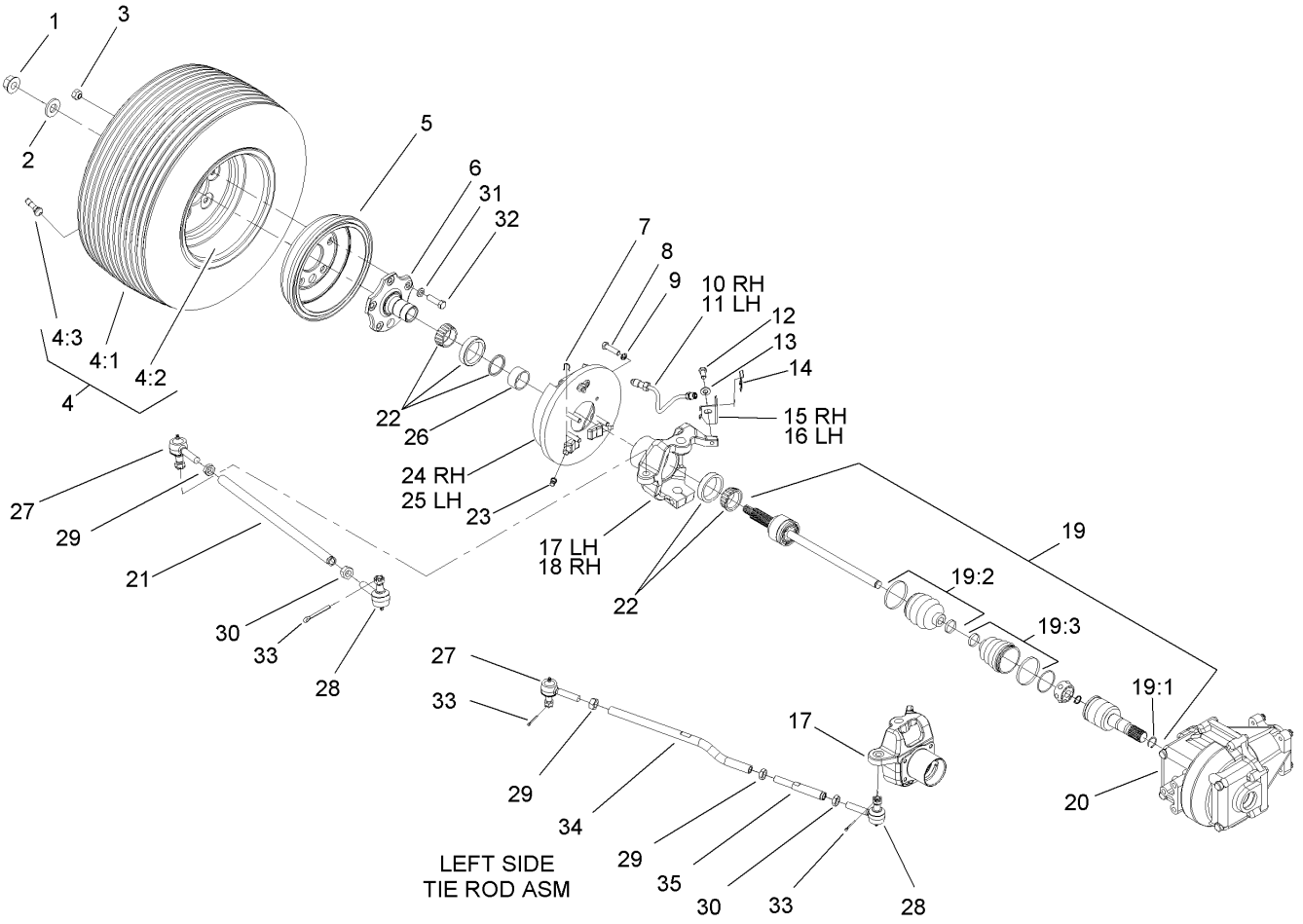

Front Wheel Assembly

Ref	Part No.	Qty.	Description
1	32128-53	2	Nut-Hex Flange
2	87-3060	2	Washer-Hardened
3	23-7270	10	Nut-Wheel
❷4		2	Tire And Wheel ASM
4:1	106-7862	1	Tire
4:2	87-5720	1	Front Rim ASM
4:3	232-27	1	Stem-Valve
5	93-7128	2	Drum-Brake
6	87-9190-03	2	Axle-Stub
7	87-3310	2	Clip-Cable, Brake
8	323-6	8	Screw-HH
9	3253-21	8	Washer-Lock
10	93-7080	1	RH Brake Tube ASM
11	93-7079	1	LH Brake Tube ASM
12	323-4	2	Screw-HH
13	3256-24	2	Washer-Flat
14	87-3580	2	Clip-Retainer
15	93-7071	1	Bracket-Brake Hose, RH
16	93-7058	1	Bracket-Brake Hose, LH
17	108-6944	1	Spindle-4Wd, LH
18	106-2540	1	Housing-Axle, RH
19	106-6710	2	Cv Joint ASM
19:1	107-2890	1	Circlip
19:2	107-2891	1	Outboard Boot Kit

Ref	Part No.	Qty.	Description
19:3	107-2892	1	Inboard Boot Kit
20	93-7054	1	Differential
21	106-2327	1	Tie Rod-Steering
22	87-9200	2	Bearing-Sealed
23	87-3450	2	Plug-Plate, Brake (Front)
24	87-9170	1	RH Front Brake ASM
25	87-9180	1	LH Front Brake ASM
26	87-9210	2	Spacer-Bearing, Wheel
27	110-2537	2	Ball Joint-RH
28	110-2536	2	Ball Joint-LH
29	3220-11	3	Nut-Jam
30	3218-21	2	Nut-Jam
31	3253-6	10	Washer-Lock
32	87-2080	10	Bolt-Hex, TAP
33	3272-12	4	Pin-Cotter
34	108-6936	1	Tie Rod-LH
35	108-6937	1	Turnbuckle-Tie Rod, LH

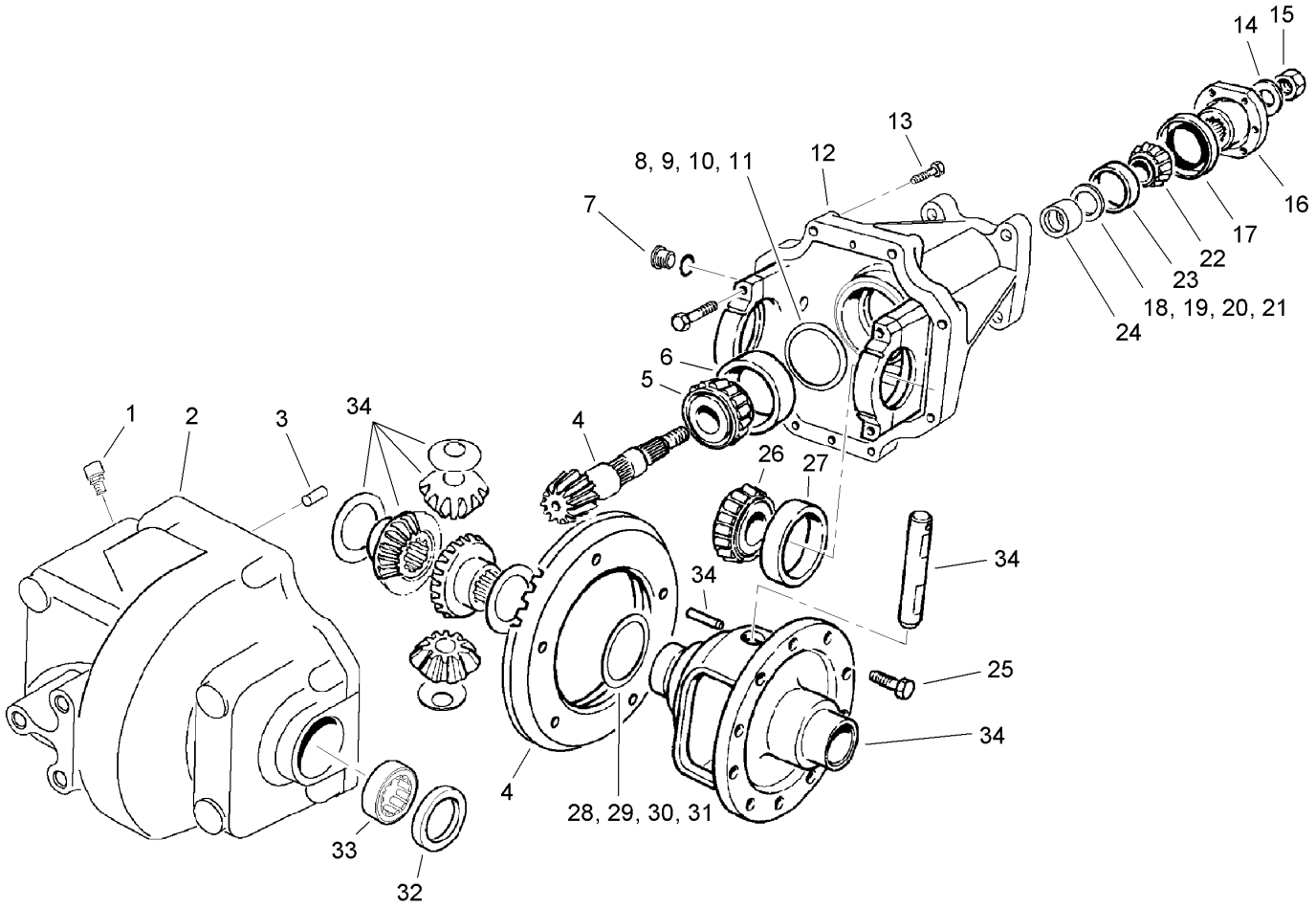

Front Differential Assembly No. 93-7054

Ref	Part No.	Qty.	Description
1	93-8910	1	Vent
2	93-8908	1	Housing-Axle
3	21-8270	2	Pin-Dowel
4	93-3618	1	Gear And Pinion ASM
5	43-6760	1	Bearing-Roller, Cone Taper
6	43-6750	1	Bearing-Taper, Cup
7	93-8916	2	Plug-Hex Socket
8	43-6710	1	Shim-Pinion (.003)
9	43-6711	1	Shim-Pinion (.005)
10	43-6712	1	Shim-Pinion (.010)
11	43-6713	1	Shim-Pinion (.030)
12	93-8900	1	Carrier ASM
13	93-8909	8	Screw-Flange Hd
14	71-4340	1	Washer
15	71-4350	1	Nut
16	93-8903	1	Companion Flange
17	71-4330	1	Seal
18	93-8904	1	Shim-Adj, .003 Thk
19	93-8905	1	Shim-Adj, .005 Thk
20	93-8906	1	Shim-Adj, .010 Thk
21	93-8907	1	Shim-Adj, .030 Thk
22	254-91	1	Cone-Bearing
23	254-90	1	Bearing-Cup
24	93-8902	1	Spacer-Bearing, Pinion

Ref	Part No.	Qty.	Description
25	21-7770	5	Screw-Gear, Drive
26	254-65	2	Cone-Bearing, Roller
27	254-66	2	Cup-Bearing, Roller
28	21-8090	1	Shim-Bearing, Diff. (.003)
29	21-8100	1	Shim-Bearing, Diff. (.005)
30	21-8110	1	Shim-Bearing, Diff. (.010)
31	21-8120	1	Shim-Bearing, Diff. (.030)
32	93-8918	2	Seal-Oil
33	93-8917	2	Bearing-Needle
34	93-8901	1	Differential Case ASM

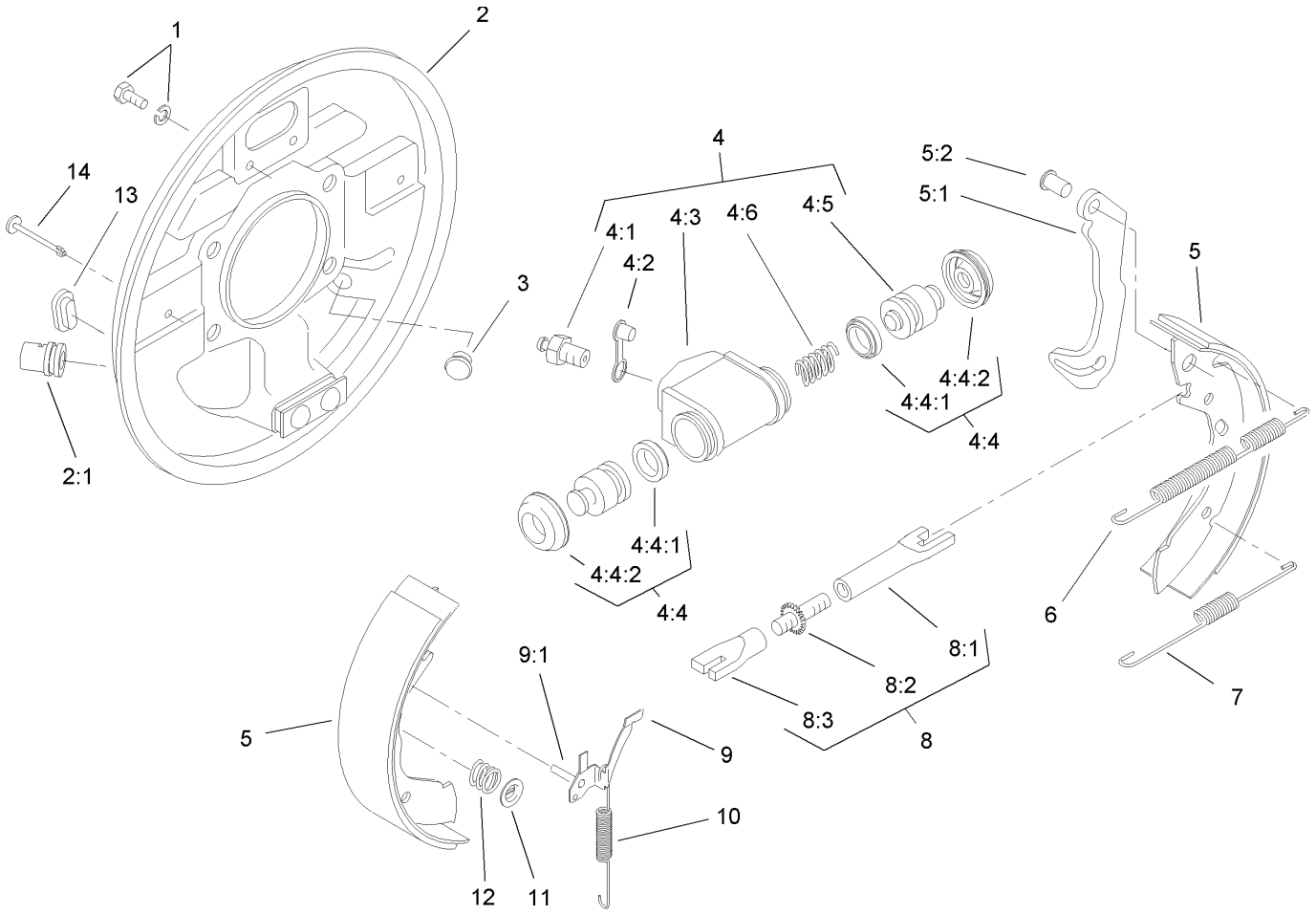

RH Front Brake Assembly No. 87-9170

Ref	Part No.	Qty.	Description
1	92-4135	2	Bolt-Set
2	92-4100	1	RH Backplate ASM
❷2:1		1	Guide-Pipe
3	92-4146	1	Plunger ASM
4	92-4118	1	Wheel Cylinder ASM
4:1	92-4113	1	Screw-Bleed
4:2	92-4114	1	Cap-Screw, Bleed
❷4:3		1	Body
4:4	92-4119	1	Seal Kit
❷4:4:1		2	Seal-L Type
❷4:4:2		2	Cover-Dust
❷4:5		2	Piston
❷4:6		1	Spring
5	92-4143	1	Lined Shoe Kit
❷5:1		1	Lever-Operating
❷5:2		1	Pin
6	92-4148	1	Spring-Return, Shoe (Upper, RH)
7	92-4149	1	Spring-Return, Shoe (Lower)
8	92-4145	1	RH Adjustor ASM
❷8:1		1	Pushrod-Female
❷8:2		1	Bolt-Adjuster
❷8:3		1	Sleeve-Adjuster
9	92-4124	1	RH Pawl Lever ASM
❷9:1		1	Pin-Pawl

Ref	Part No.	Qty.	Description
10	92-4151	1	Spring-Adjuster, RH
11	92-4131	2	Washer-Hold Down, Shoe
12	92-4152	2	Spring-Hold Down, Shoe
13	92-4134	2	Plug-Inspection
14	92-4133	2	Pin-Hold Down, Shoe

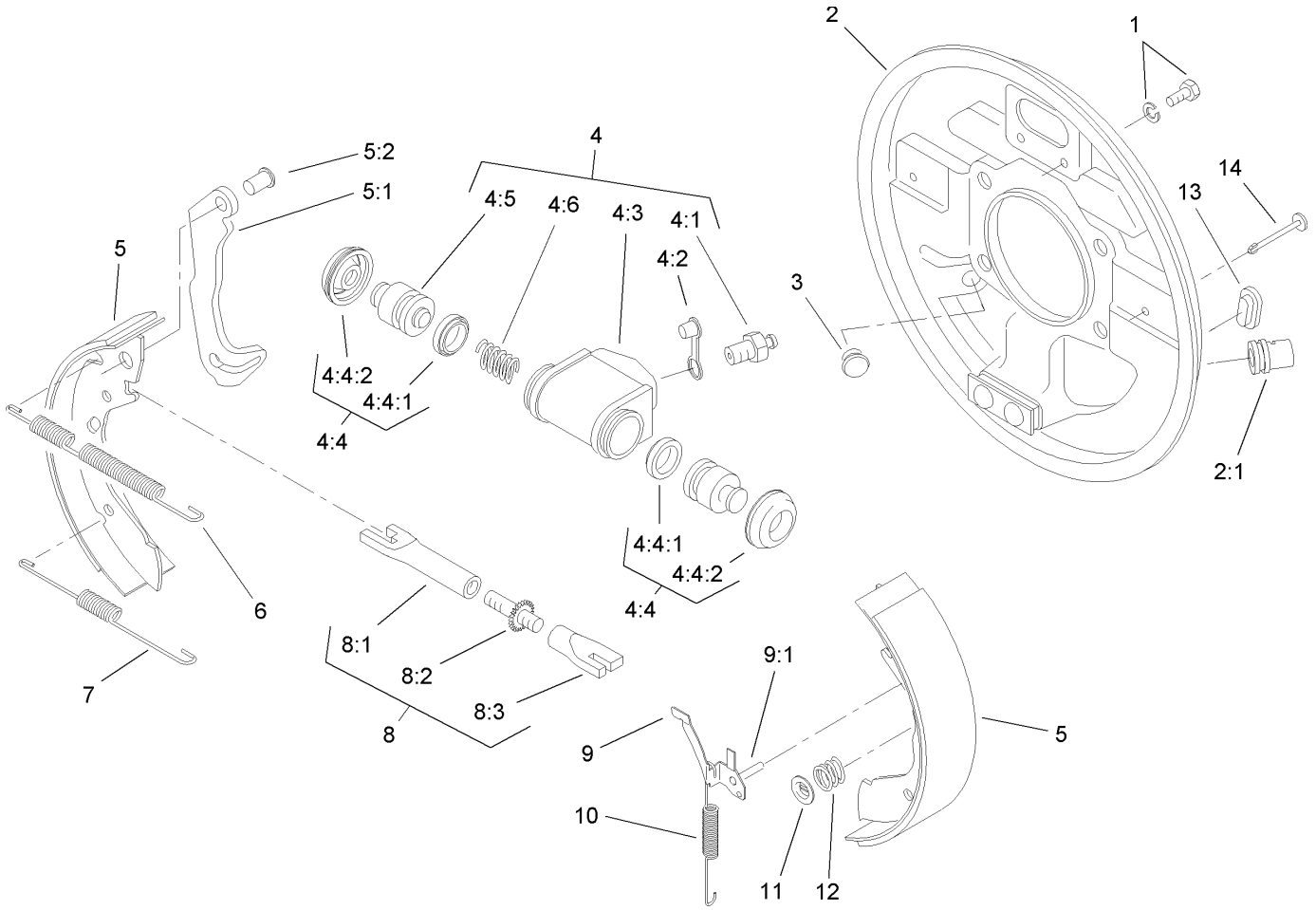

LH Front Brake Assembly No. 87-9180

Ref	Part No.	Qty.	Description
1	92-4135	2	Bolt-Set
2	92-4136	1	LH Backplate ASM
❷2:1		1	Guide-Pipe
3	92-4146	1	Plunger ASM
4	92-4117	1	Wheel Cylinder ASM
4:1	92-4113	1	Screw-Bleed
4:2	92-4114	1	Cap-Screw, Bleed
❷4:3		1	Body
4:4	92-4119	1	Seal Kit
❷4:4:1		2	Seal-L Type
❷4:4:2		2	Cover-Dust
❷4:5		2	Piston
❷4:6		1	Spring
5	92-4143	1	Lined Shoe Kit
❷5:1		1	Lever-Operating
❷5:2		1	Pin
6	92-4147	1	Spring-Return, Shoe (Upper, LH)
7	92-4149	1	Spring-Return, Shoe (Lower)
8	92-4144	1	LH Adjuster ASM
❷8:1		1	Pushrod-Female
❷8:2		1	Bolt-Adjuster
❷8:3		1	Sleeve-Adjuster
9	92-4123	1	LH Pawl Lever ASM
❷9:1		1	Pin-Pawl

Ref	Part No.	Qty.	Description
10	92-4150	1	Spring-Adjuster, LH
11	92-4131	2	Washer-Hold Down, Shoe
12	92-4152	2	Spring-Hold Down, Shoe
13	92-4134	2	Plug-Inspection
14	92-4133	2	Pin-Hold Down, Shoe

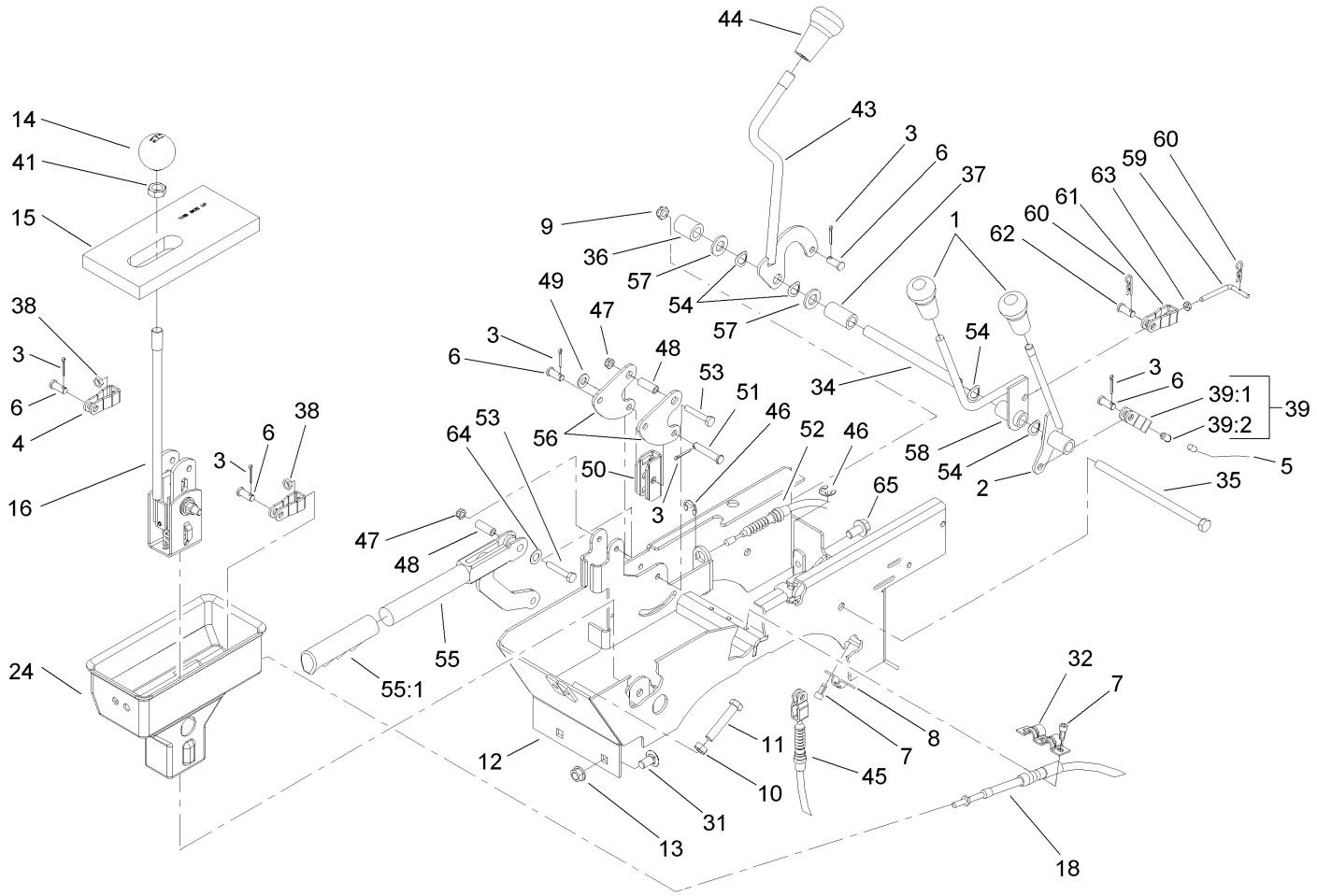

Console Assembly

Ref	Part No.	Qty.	Description
1	106-7903	2	Knob-Control
2	106-7828	1	Lever ASM
3	3272-6	6	Pin-Cotter
4	87-2310	2	Clevis-Cable
5	106-6698	1	Cable-Hi-Low
6	283-62	5	Pin-Clevis
7	65-5220	5	Screw-Forming, Thread
8	87-4340	1	Clamp-Cable
9	3296-59	1	Nut-Lock, NI
10	3217-7	2	Nut-Hex
11	323-10	2	Screw-HH
12	108-6914-03	1	Lever Support ASM
13	3290-357	2	Nut-HHF, Whiz
14	87-6720	1	Knob-Shift
15	87-6570	1	Seal-Boot, Lower
16	106-7887	1	Shift ASM
18	87-4260	2	Cable-Selector, Gear
24	106-2376	1	Boot-Shift, Lower
31	3231-21	2	Screw-CARR
32	87-4960	1	Clamp-Cable
34	106-7833	1	Spacer
35	323-36	1	Screw-HH
36	66-6501	1	Spacer-Wheel
37	106-7835	1	Spacer

Ref	Part No.	Qty.	Description
38	3220-1	2	Nut-Jam
39	87-7160	1	Cable Clevis ASM
39:1	87-2310	1	Clevis-Cable
39:2	32148-15	1	Nut-Insert
41	3218-18	1	Nut-Jam
43	87-5030	1	Lever-Lock, Differential
44	106-7952	1	Knob
45	87-4460	1	Cable-Lock, Differential
46	32120-47	3	Ring-Retaining, External
47	3296-56	2	Nut-Lock, NI
48	114402	2	Spacer
49	3256-23	1	Washer-Flat
50	87-3480	1	Bracket-Equalizer, Cable
51	94-3829	1	Pin-Clevis
52	106-6691	2	Cable-Brake, Park
53	321-9	2	Screw-HH
54	3290-221	4	Washer-Spring
55	104-6842	1	Lever-Brake, Park
55:1	106-7972	1	Grip-Handle
56	106-7814	2	Bellcrank
57	33096-00	2	Washer-Flat
58	106-7960	1	HYD Lever ASM
59	107-8000	1	Rod-Link
60	3290-307	2	Pin-Hair

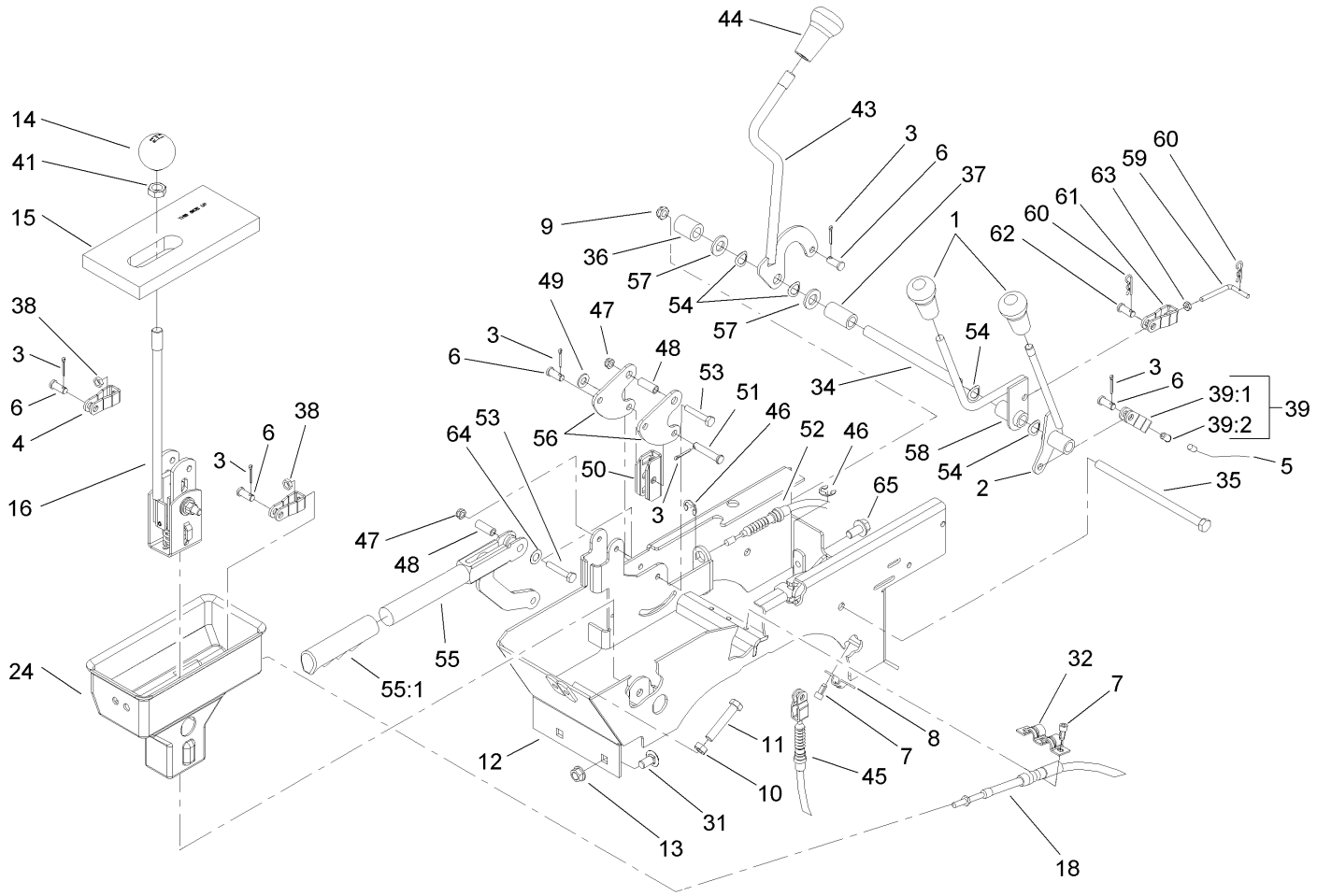

Console Assembly (continued)

Ref	Part No.	Qty.	Description
61	107-7966	1	Clevis ASM
62	283-62	1	Pin-Clevis
63	3219-14	1	Nut-Hex
64	3290-477	1	Washer-Curved
65	3234-12	2	Screw-HHF

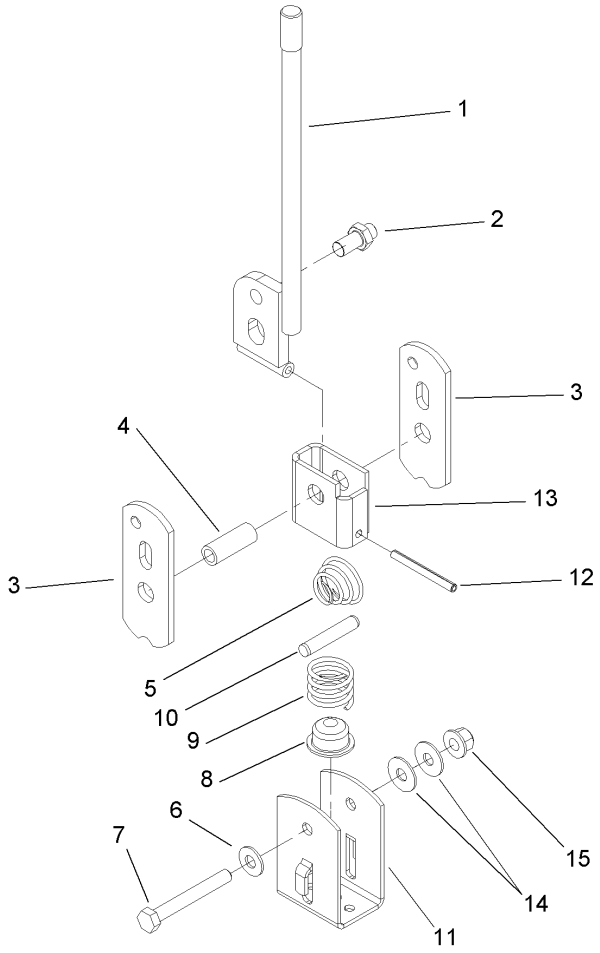

Shift Assembly No. 106-7887

Ref	Part No.	Qty.	Description
1	87-2040	1	Shift Lever ASM
2	87-3650	1	Pin-Shift
3	87-3540	2	Link-Shift
4	87-2520	1	Tube-Pivot
5	87-2900	1	Spring-Compression
6	87-8640	1	Washer-Flat
7	322-12	1	Screw-HH
8	87-3530	1	Button-Shifter
9	87-3660	1	Spring-Compression
10	3290-507	1	Pin-Dowel
11	87-3520	1	Clevis
12	32121-48	1	Pin-Spring
13	87-6040	1	Bracket-Shifter
14	3290-456	2	Washer-Belleville
15	3296-58	1	Nut-Lock, NI

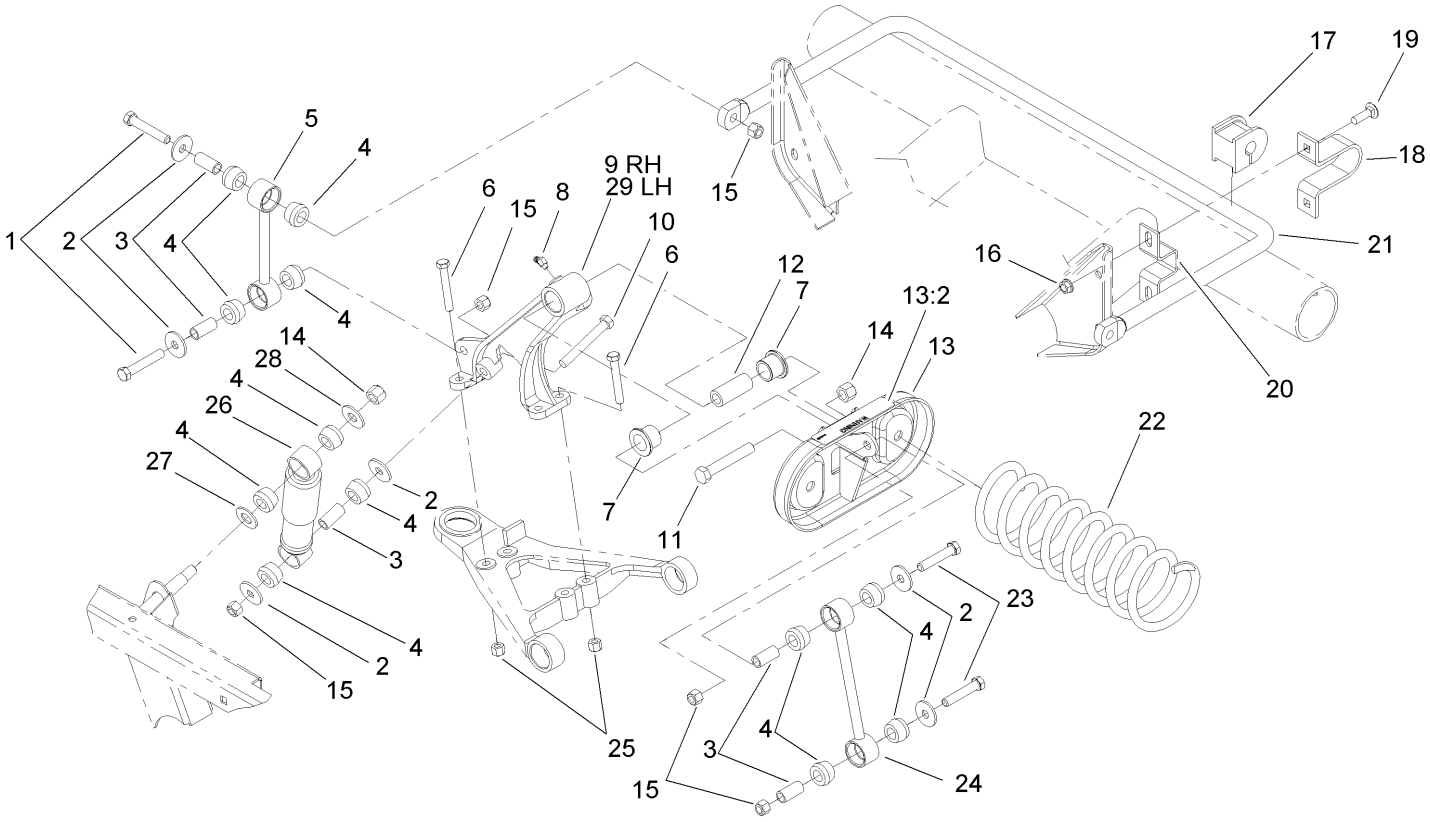

Front Suspension Assembly

Ref	Part No.	Qty.	Description
1	324-10	4	Screw-HH
2	87-5330	12	Washer
3	87-3600	10	Spacer-Absorber, Shock
4	87-3920	24	Bushing
5	87-3860-03	2	Anti-Sway Bar Link ASM
6	323-12	8	Screw-HH
7	33-3090	4	Bushing
8	302-11	2	Fitting-Lube, 45 DEG
9	87-0150-03	1	Tower-Control Arm, RH
10	324-13	2	Screw-HH
11	325-13	2	Screw-HH
12	87-2500	2	Sleeve-Spring, Pivot
13	105-7958	2	Spring Cradle ASM
13:2	93-9879	1	Decal-Warning
14	3296-23	4	Nut-Lock, NI
15	3296-48	10	Nut-Lock, NI
16	3290-357	4	Nut-HHF, Whiz
17	87-3910	2	Bushing-Rubber
18	87-4010-03	2	Clamp-Bar, Sway
19	3231-25	4	Screw-CARR
20	87-3890-03	2	Bracket-Bar, Sway
21	87-3850-03	1	Bar-Sway, Anti
22	105-4183-01	2	Spring-Compression
23	324-9	4	Screw-HH

Ref	Part No.	Qty.	Description
24	106-2302-03	2	Stabilizer Link ASM
25	3296-39	8	Nut-Lock, NI
26	87-3110	2	Absorber-Shock
27	3256-27	2	Washer-Flat
28	3256-6	2	Washer-Flat
29	87-0160-03	1	Tower-Control Arm, LH

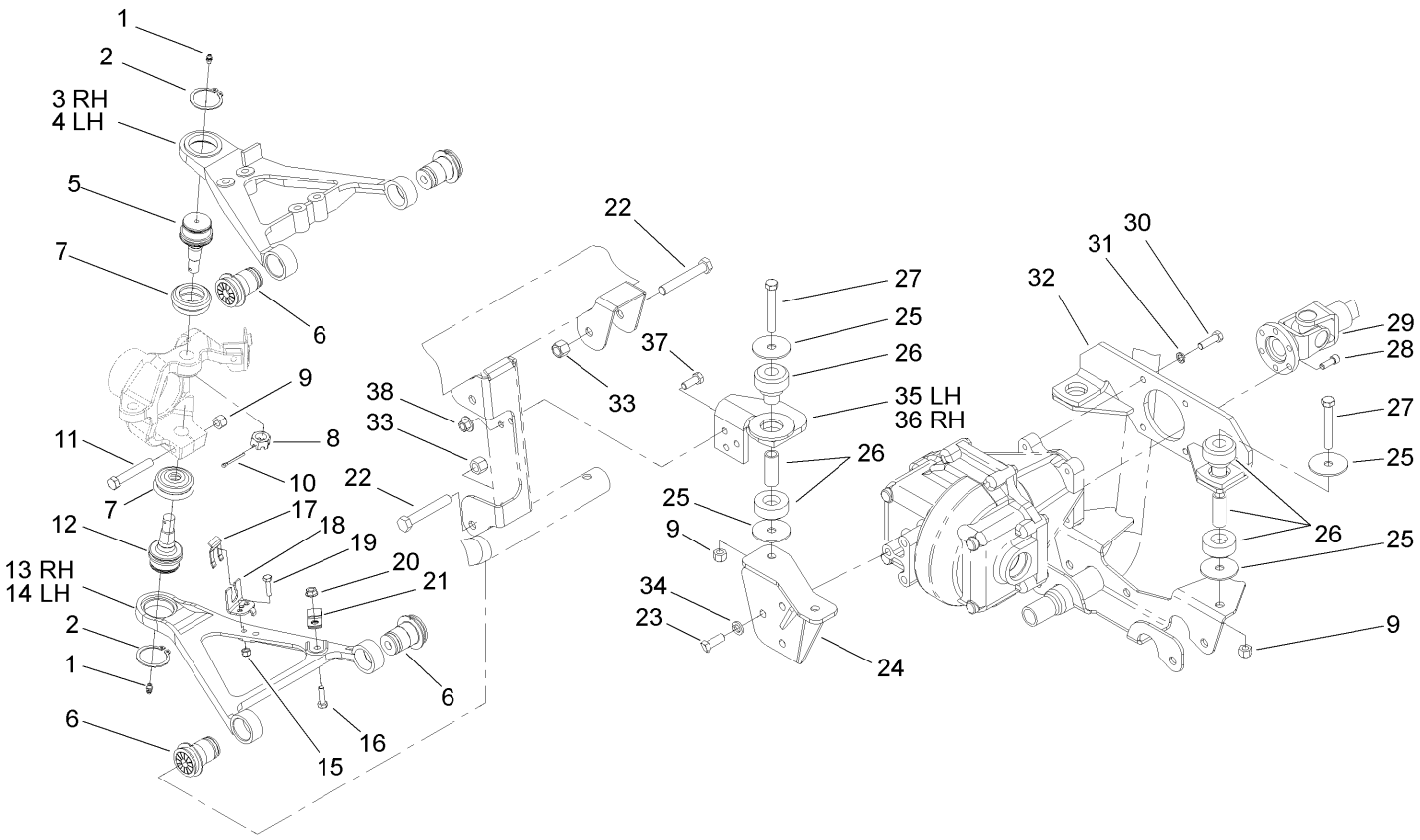

Front Control Arm Assembly

Ref	Part No.	Qty.	Description
1	302-5	4	Fitting-Grease
2	32151-104	4	Ring-Retaining, External
3	93-7135-03	1	Arm-Control, Top (RH)
4	93-7133-03	1	Arm-Control, Top (LH)
5	87-1430	2	Joint-Ball
6	87-1450	8	Bushing-Flange
7	87-2420	4	Seal-Joint, Ball
8	32136-2	2	Nut-SHH
9	3296-48	6	Nut-Lock, NI
10	3272-11	2	Pin-Cotter
11	324-11	2	Screw-HH
12	93-7052	2	Joint-Ball, 4Wd
13	87-0210-03	1	Arm-Control, Lower (RH)
14	87-0220-03	1	Arm-Control, Lower (LH)
15	3296-42	2	Nut-Lock, NI
16	322-5	2	Screw-HH
17	87-3580	2	Clip-Retainer
18	93-7070	2	Bracket-Hose, Brake
19	321-6	2	Screw-HH
20	32128-20	2	Nut-HF
21	2412-10	2	R-Clamp
22	325-14	8	Screw-HH
23	324-5	3	Screw-HH
24	93-7118-03	1	Bracket-Differential

Ref	Part No.	Qty.	Description
25	87-5100	8	Washer-Snubbing
26	106-7865	4	Engine Mount ASM
27	324-12	4	Screw-HH
28	3274-97	6	Screw-HSH
29	93-7116	1	Driveshaft-4Wd
30	323-7	4	Screw-HH
31	3253-21	4	Washer-Lock
32	93-7074-03	1	Mount-Differential, Rear ASM
33	3296-23	8	Nut-Lock, NI
34	3253-6	3	Washer-Lock
35	106-6724-03	1	Bracket-Support, LH
36	106-6725-03	1	Bracket-Support, RH
37	323-6	6	Screw-HH
38	32128-43	6	Nut-Flange

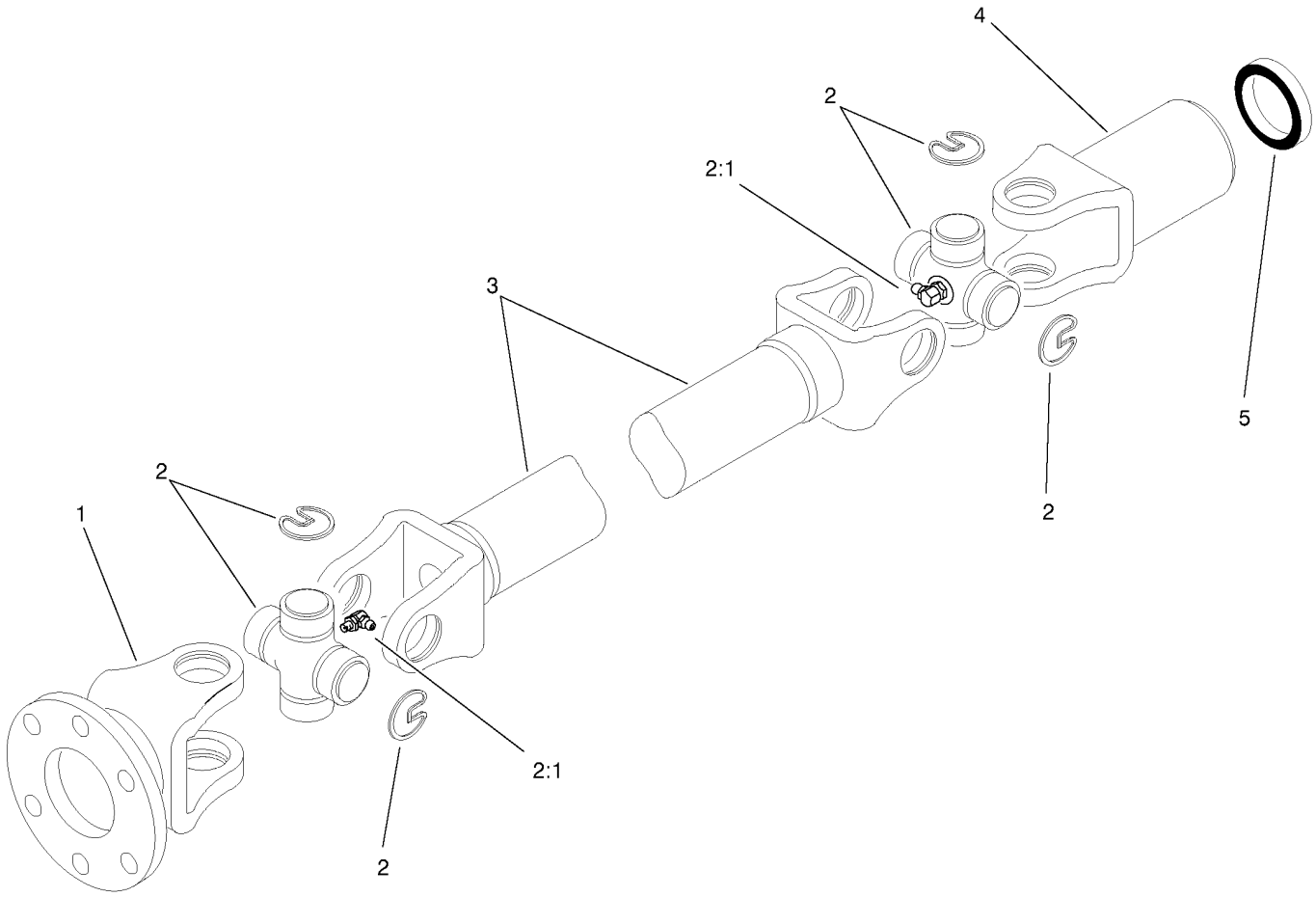

Differential Drive Shaft Assembly No. 93-7116

Ref	Part No.	Qty.	Description
1	92-4193	1	Yoke
2	54-9180	2	U-Joint Kit
2:1	62-3820	1	Fitting-Grease
3	92-4194	1	Center-Double, Fixed Length
4	92-4195	1	Yoke
5	92-4196	1	Seal

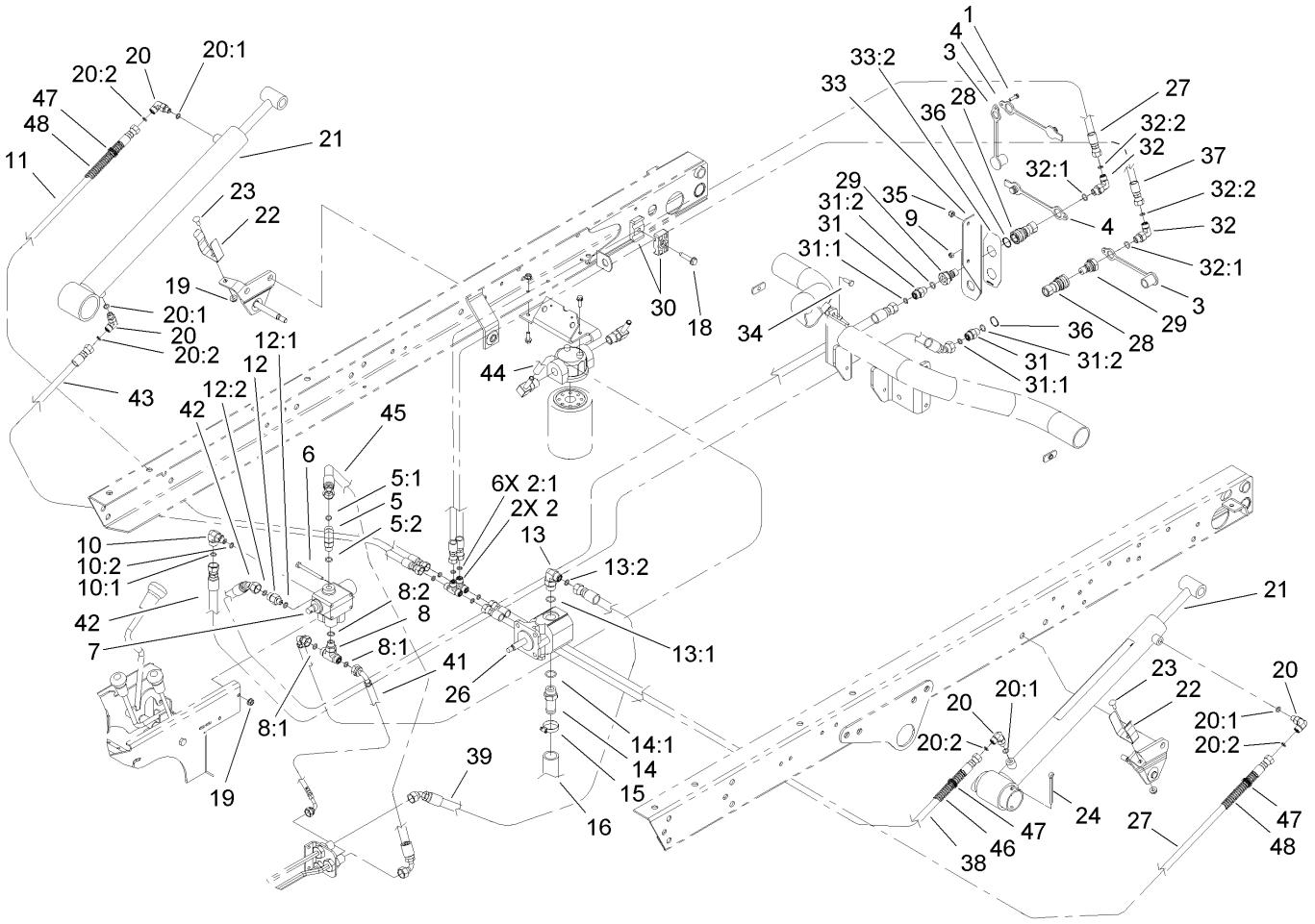

Lift Valve and Hydraulic Assembly

Ref	Part No.	Qty.	Description
1	32105-13	1	Screw-SHH
2	340-21	2	Fitting
2:1	237-21	3	O-Ring
3	106-7881	2	Cap-Dust, HYD
4	106-7882	2	Plug-Dust, HYD
5	340-77	1	Fitting-HYD, 90 DEG
5:1	237-22	1	O-Ring
5:2	237-42	1	O-Ring
6	321-14	2	Screw-HH
7	43-1950	1	Valve-Control, HYD
8	340-94	1	Adapter
8:1	237-22	2	O-Ring
8:2	237-42	1	O-Ring
9	3296-2	1	Nut-Lock
10	340-97	1	Fitting-HYD, 90 DEG
10:1	237-22	1	O-Ring
10:2	237-78	1	O-Ring
11	92-7564	1	Hose ASM
12	340-88	1	Adapter
12:1	237-22	1	O-Ring
12:2	237-78	1	O-Ring
13	340-18	1	Fitting-HYD, 90 DEG
13:1	237-79	1	O-Ring
13:2	237-22	1	O-Ring

Ref	Part No.	Qty.	Description
14	354-136	1	Fitting-HYD
14:1	237-80	1	O-Ring
15	2412-34	1	Clamp-Hose
16	87-3670	1	Hose-Suction
18	32144-57	1	Screw
19	32128-33	4	Nut-HF
20	340-132	4	Fitting-HYD, 90 DEG
20:1	237-78	1	O-Ring
20:2	237-21	1	O-Ring
21	106-7939	2	HYD Cylinder ASM
22	108-3109	2	Retainer-Cylinder
23	3229-1	2	Screw-CARR
24	3272-37	2	Pin-Cotter
26	106-6649	1	Pump-Gear, HYD
27	104-3716	2	HYD Hose ASM
28	106-7968	2	Coupler-Quick, Female
29	106-7969	2	Coupler-Quick, Male
30	56-7976	2	Clamp-Tube
31	340-2	2	Fitting-Straight, HYD
31:1	237-22	1	O-Ring
31:2	237-42	1	O-Ring
32	340-82	2	Adapter
32:1	237-42	1	O-Ring
32:2	237-21	1	O-Ring

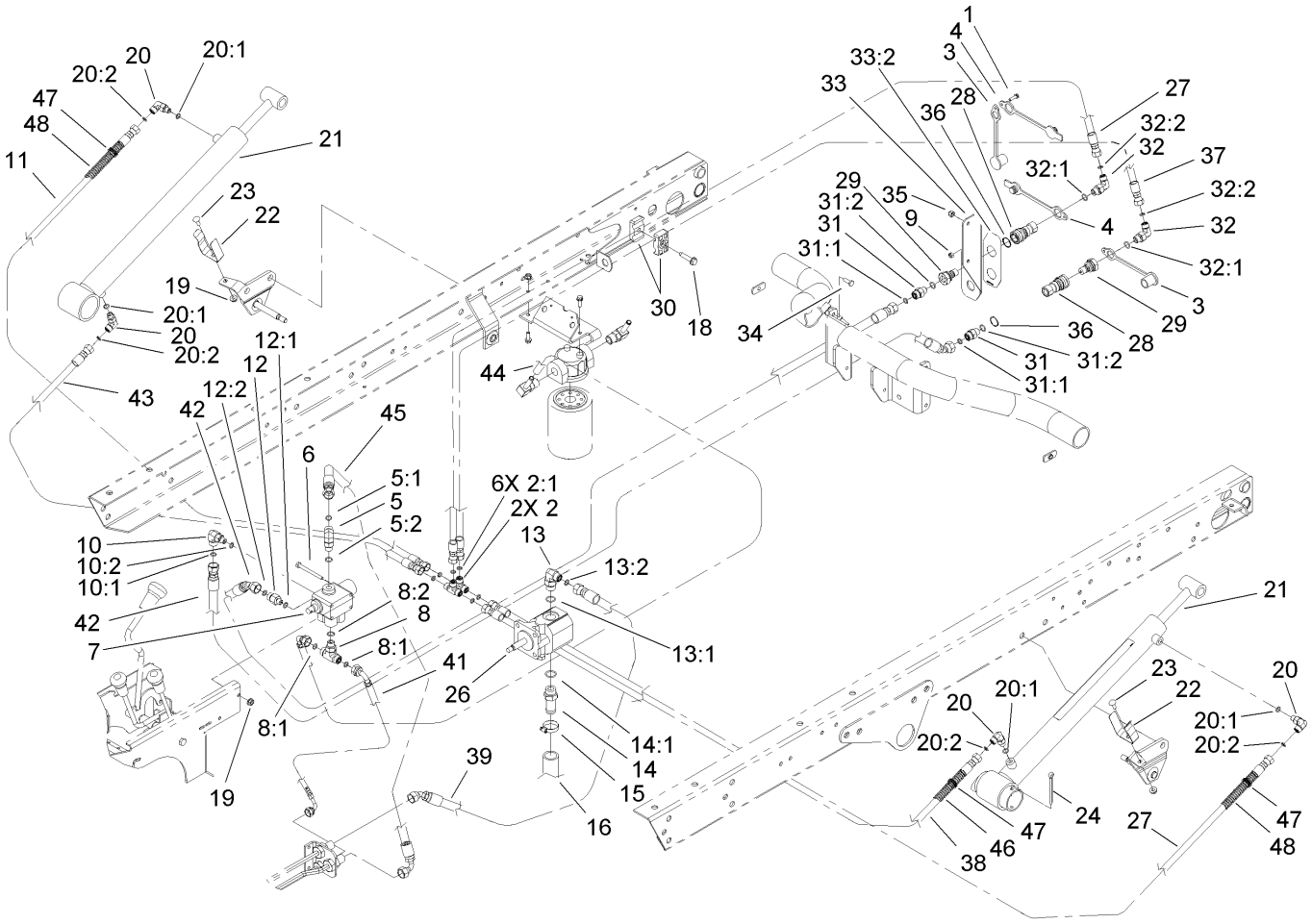

Lift Valve and Hydraulic Assembly (continued)

Ref	Part No.	Qty.	Description
33	106-7923	1	Quick Coupler Bracket ASM
33:2	106-7888	1	Decal-Couplers, Quick
34	3234-21	2	Screw-Cap
35	3296-42	2	Nut-Lock, NI
36	32151-83	2	Ring-Snap
37	98-4584	1	HYD Hose ASM
38	98-4590	1	Hose ASM
39	95-0965	1	Hose ASM
41	106-7964	1	Hose-HYD
42	106-7977	2	Hose-HYD
43	106-7981	1	Hose-HYD
44	106-7965	1	Hose-HYD
45	95-8828	1	Hose-HYD
46	24-7922	1	Cover-Shaft, Drive
47	3290-378	6	Tie-Cable
48	24-7923	2	Cover-Shaft, Drive

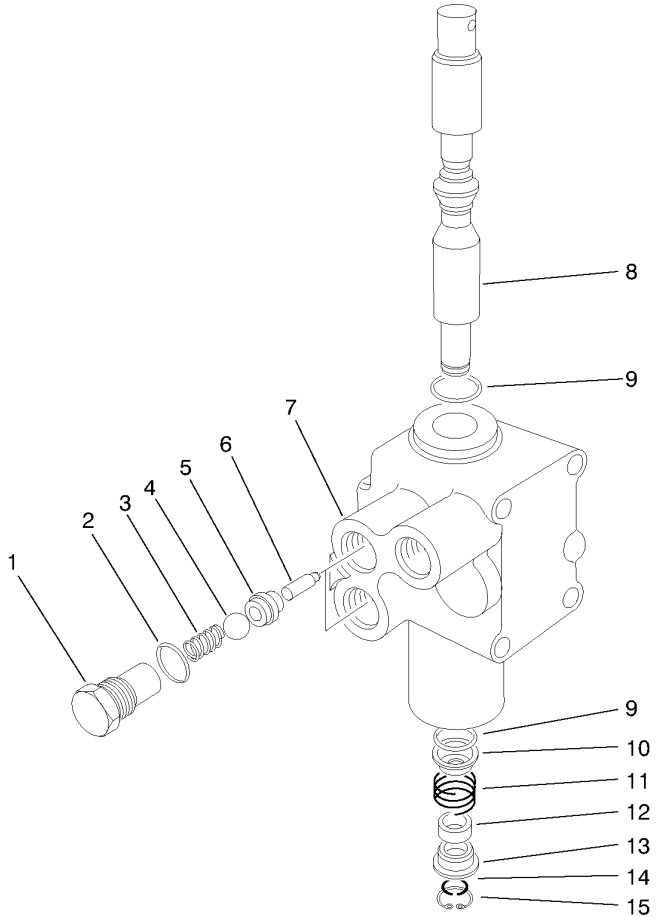

Control Valve Assembly No. 43-1950

Ref	Part No.	Qty.	Description
1	22-8330	2	Plug
2	237-42	2	O-Ring
3	22-8340	2	Spring
4	22-8350	2	Ball
5	22-8370	2	Seat-Valve
6	22-8360	2	Pin
❷7		1	Body
8	22-8420	1	Spool
9	22-8500	2	O-Ring
10	22-8380	2	Retainer
11	22-8410	1	Spring
12	23-3030	1	Spacer
13	22-8480	1	Ring-Snap
14	22-8490	1	Ring-Snap

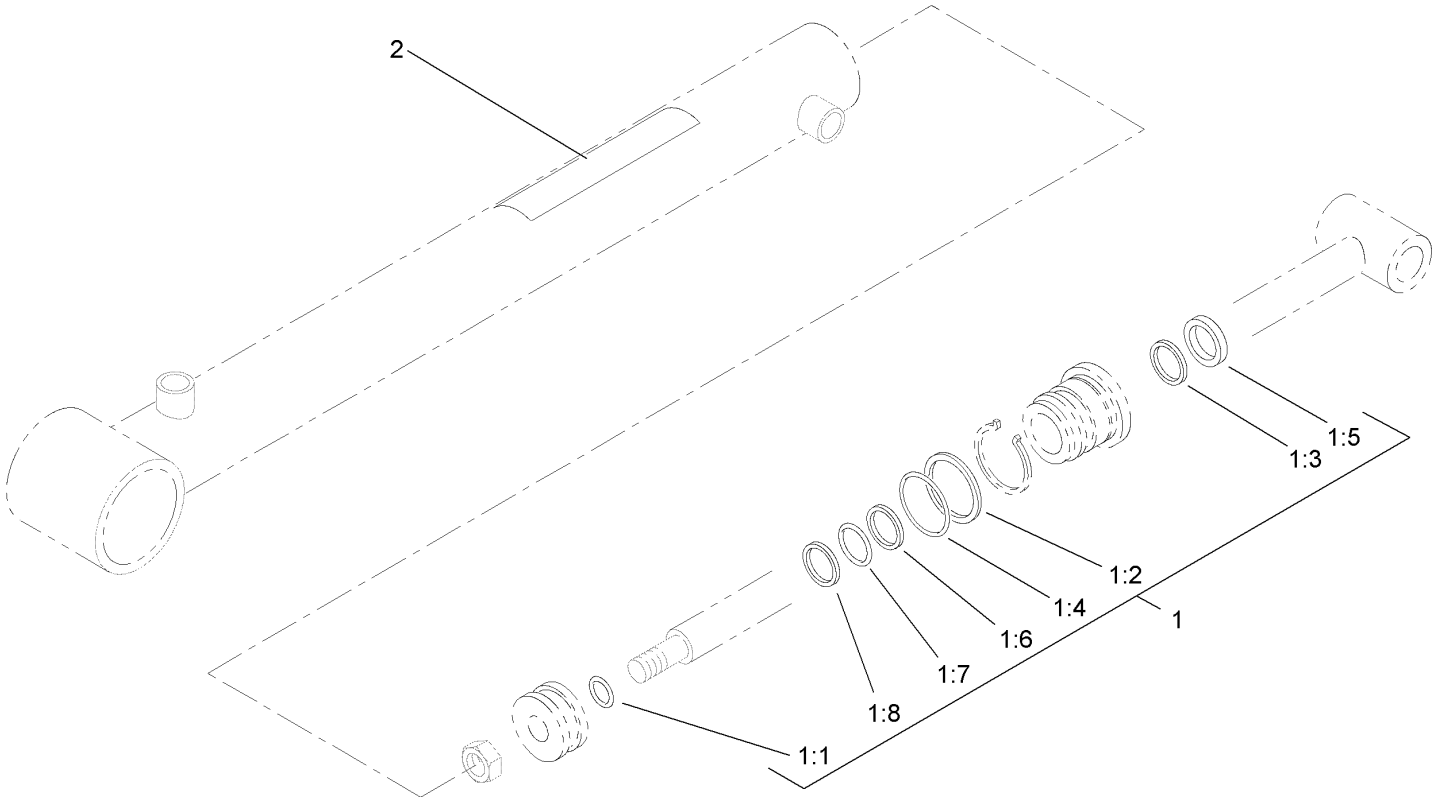

Hydraulic Cylinder Assembly No. 106-7939

Ref	Part No.	Qty.	Description
1	106-7941	1	Seal Kit
❷1:1		1	Seal-Dust
❷1:2		1	Seal-Dust
❷1:3		1	Seal ASM
❷1:4		1	Back-Up
❷1:5		1	Wiper
❷1:6		1	Seal ASM
❷1:7		1	Seal-Dust
❷1:8		1	Ring-Wear
2	93-9852	1	Decal-Warning

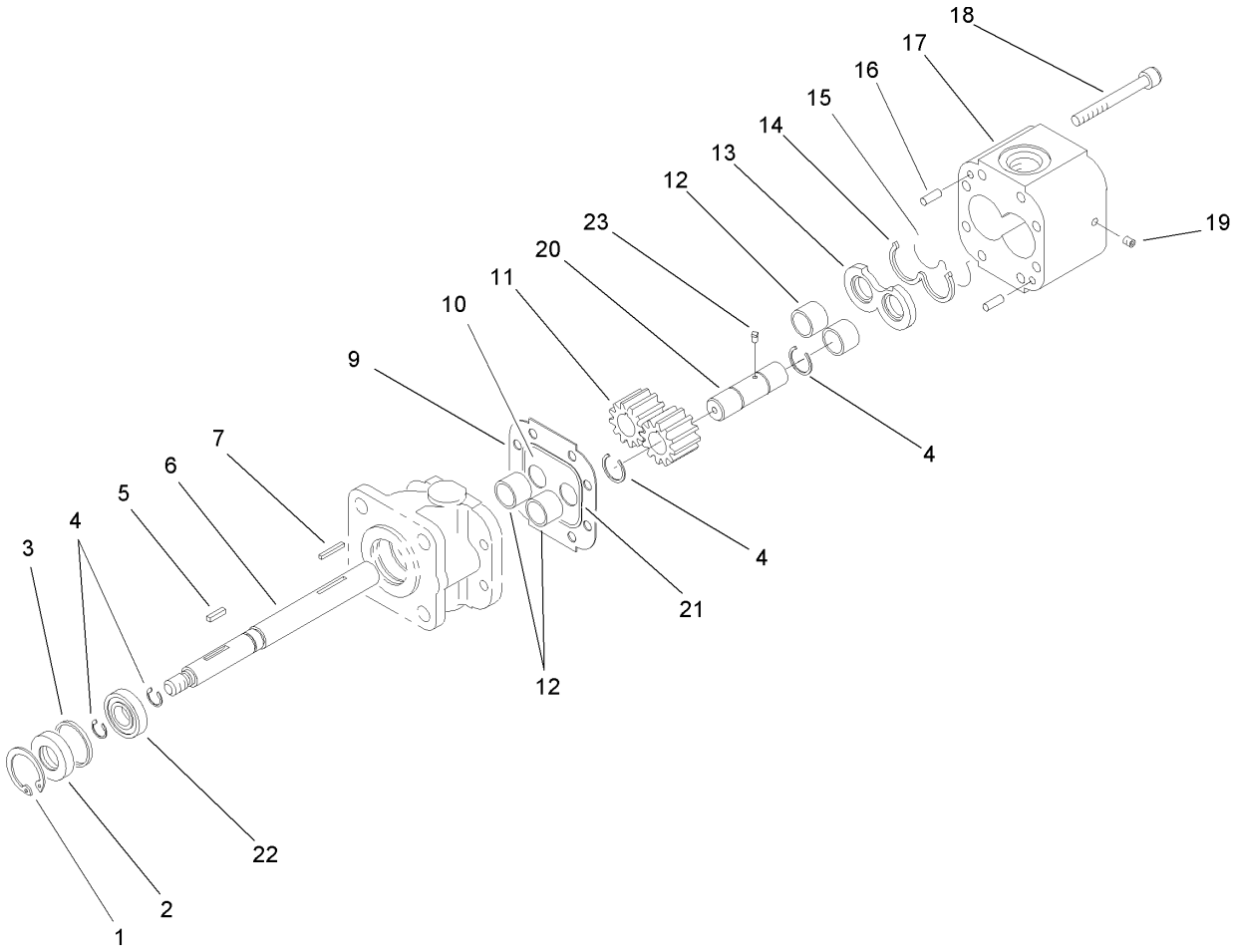

Hydraulic Pump Assembly No. 106-6649

Ref	Part No.	Qty.	Description
1	32151-41	1	Ring-Snap
2	92-2195	1	Seal-Oil
3	92-2186	1	Spacer
4	92-2178	4	Ring-Crescent
5	92-2179	1	Key-Square
6	92-2189	1	Shaft-Drive
7	92-2177	1	Pin-Shear
9	92-2182	1	Plate-Seal
10	92-2183	1	Plate-Wear
11	92-2175	2	Gear
12	92-2192	4	Bearing
13	92-2181	1	Plate-Pressure
14	92-2197	1	Seal-Back Up, Pressure Plate
15	92-2196	1	Seal-Plate, Pressure
16	92-2176	2	Pin-Shear
17	92-2187	1	Housing-Gear, End
18	92-2173	8	Screw
19	92-2185	1	Plug
20	92-2190	1	Shaft-Idler
21	92-2198	1	Seal-Plate, Wear
22	92-2191	1	Bearing-Ball
23	92-2199	1	Key-Ball

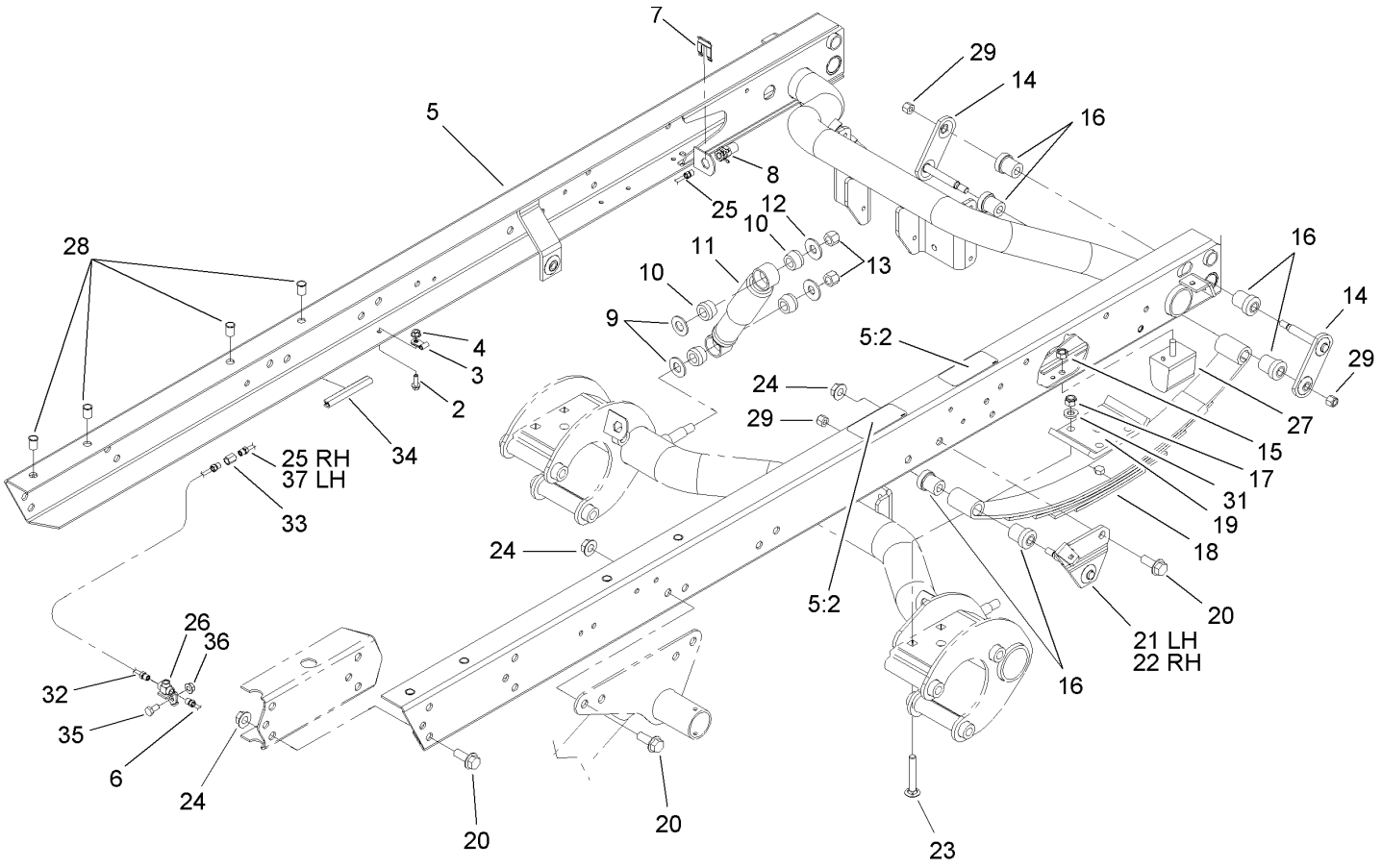

Rear Frame Assembly

Ref	Part No.	Qty.	Description
2	3234-4	4	Screw-HHF
3	2412-149	4	Clamp-Hose
4	32128-33	4	Nut-HF
5	105-7959	1	Frame Channel ASM
5:2	93-8071	2	Decal-Surface, Hot
6	94-3843	1	LH Rear Brake Tube ASM
7	87-3580	2	Clip-Retainer
8	87-4100	2	Hose-Brake, Rear
9	3256-27	4	Washer-Flat
10	87-3920	8	Bushing
11	87-3110	2	Absorber-Shock
12	3256-6	4	Washer-Flat
13	3296-23	4	Nut-Lock, NI
14	87-3980	4	Shackle ASM
15	48-9520	2	Nut
16	87-4760	12	Bushing-Rubber
17	3296-76	8	Nut-Lock, NI
18	87-1490	2	Spring-Leaf, Rear
19	87-7470-03	2	Plate-Spring, Clamp
20	3234-38	24	Screw-HHF
21	87-3960	1	LH Spring Mount ASM
22	87-3940	1	RH Spring Mount ASM
23	3232-17	8	Screw-CARR
24	32128-23	24	Nut-HF

Ref	Part No.	Qty.	Description
25	94-3846	1	RH Rear Brake Tube ASM
26	87-3560	1	Tee
27	87-3470	2	Bumper-Axle, Rear
28	32148-9	8	Insert-Nut
29	3296-39	6	Nut-Lock, NI
31	87-7480	8	Washer
32	94-3845	1	RH Rear Brake Tube ASM
33	87-3570	2	Union
34	43-4300	1	Trim-Frame, Rear
35	322-2	1	Screw-HH
36	32128-20	1	Nut-HF
37	94-3844	1	LH Rear Brake Tube ASM

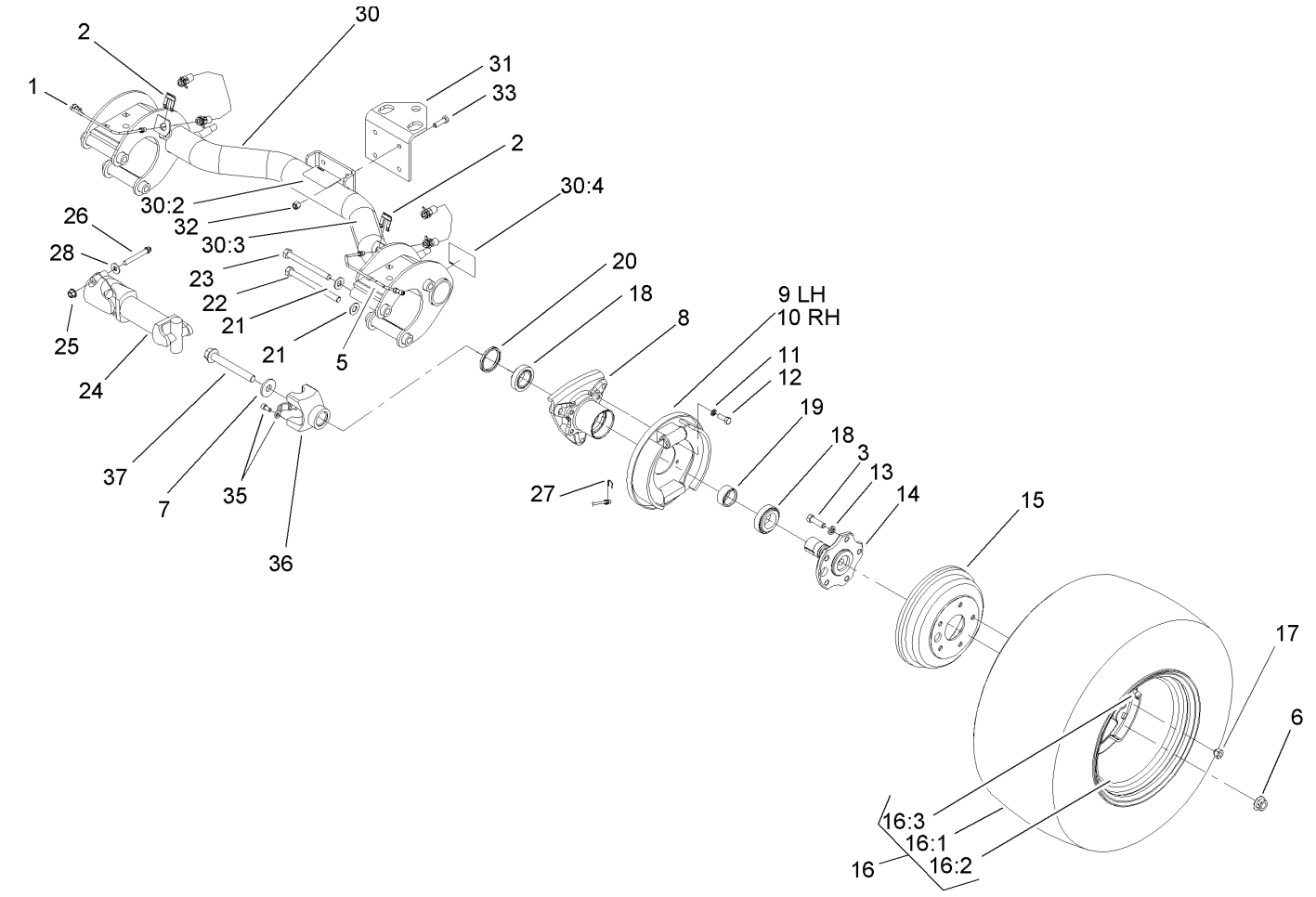

Rear Axle Assembly

Ref	Part No.	Qty.	Description
1	87-4090	1	RH Rear Brake Tube ASM
2	87-3580	2	Clip-Retainer
3	87-2080	10	Bolt-Hex, TAP
5	87-4080	1	LH Rear Brake Tube ASM
6	105-1764	2	Nut-Flange, Side Lock
7	104-9216	2	Washer-Hardened
8	87-2240	2	Housing-Axle
9	93-7126	1	LH Rear Brake ASM
10	93-7125	1	RH Rear Brake ASM
11	3253-21	8	Washer-Lock
12	323-6	8	Screw-HH
13	3253-6	10	Washer-Lock
14	105-1717-03	2	Axle-Stub
15	93-7128	2	Drum-Brake
❷16		2	Tire And Wheel ASM
16:1	106-7868	1	Tire
16:2	87-6750	1	Wheel
16:3	232-27	1	Stem-Valve
17	23-7270	10	Nut-Wheel
18	87-1970	2	Bearing
19	87-4060	2	Spacer-Bearing, Wheel
20	108-7019	2	Seal-Shaft
21	87-7270	6	Washer-Thrust
22	325-20	5	Screw-HH

Ref	Part No.	Qty.	Description
23	325-19	1	Screw-HH
24	98-2918	2	Driveshaft ASM
25	32128-36	4	Nut-HF
26	98-2939	4	Screw-Cap
27	87-3310	2	Clip-Cable, Brake
28	80-6990	4	Washer-Hardened
30	105-7961	1	Rear Axle ASM
30:2	93-9442	1	Decal-Atf
30:3	93-9862	1	Decal-Danger
30:4	93-9449	2	Decal-Driveshaft
31	92-5951-03	1	Angle-Hitch
32	3296-39	4	Nut-Lock, NI
33	323-7	4	Screw-HH
35	92-4189	2	Strap Kit
36	92-4190	2	Yoke
37	105-1763	2	Screw-HHF

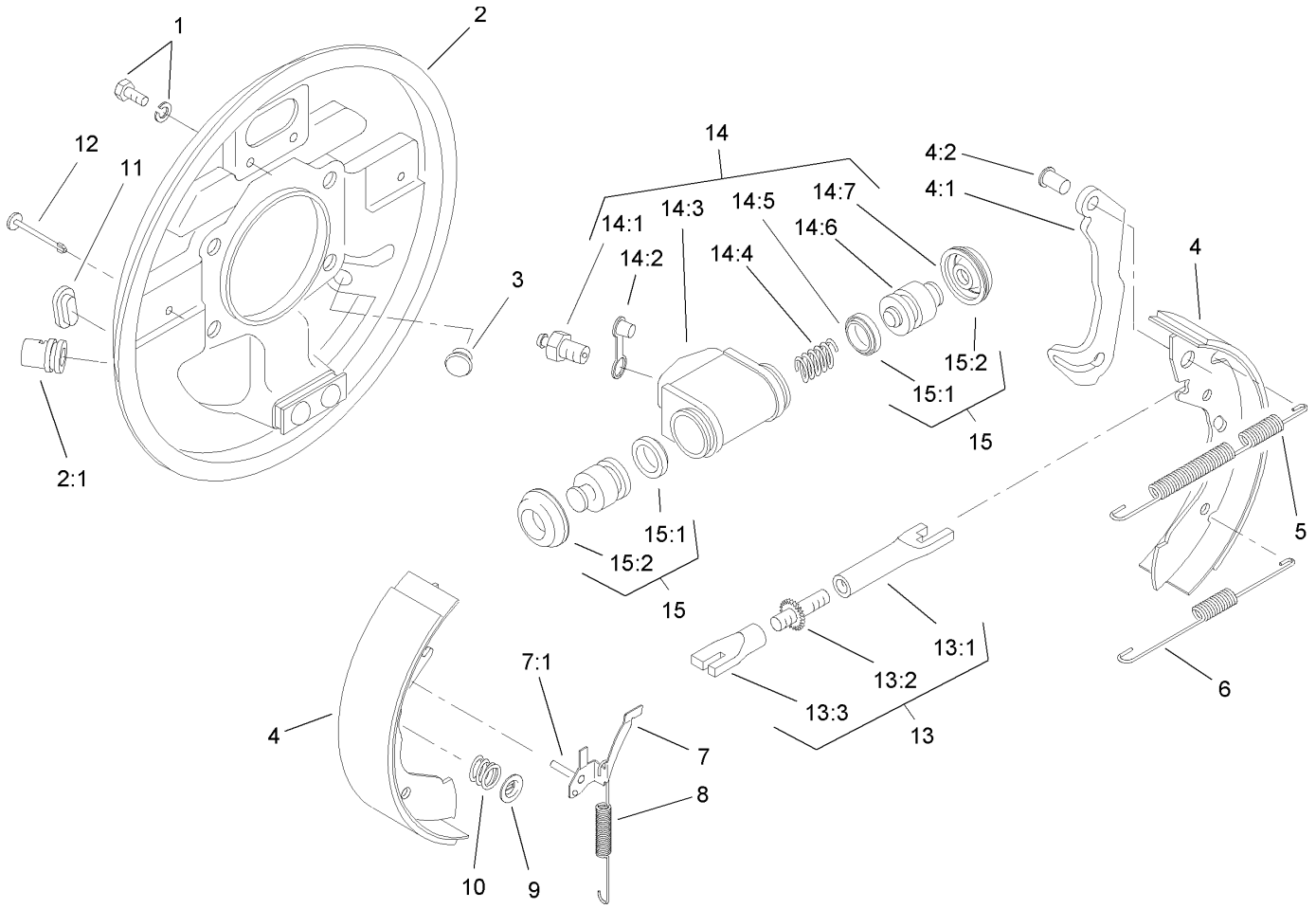

LH Rear Brake Assembly No. 93-7126

Ref	Part No.	Qty.	Description
1	92-4135	2	Bolt-Set
2	92-4136	1	LH Backplate ASM
❷2:1		1	Guide-Pipe
3	92-4146	1	Plunger ASM
4	92-4143	1	Lined Shoe Kit
❷4:1		1	Lever-Operating
❷4:2		1	Pin
5	92-4147	1	Spring-Return, Shoe (Upper, LH)
6	92-4149	1	Spring-Return, Shoe (Lower)
7	92-4123	1	LH Pawl Lever ASM
❷7:1		1	Pin-Pawl
8	92-4150	1	Spring-Adjuster, LH
9	92-4131	2	Washer-Hold Down, Shoe
10	92-4152	2	Spring-Hold Down, Shoe
11	92-4134	1	Plug-Inspection
12	92-4133	2	Pin-Hold Down, Shoe
13	92-4144	1	LH Adjuster ASM
❷13:1		1	Pushrod-Female
❷13:2		1	Bolt-Adjuster
❷13:3		1	Sleeve-Adjuster
14	92-4140	1	LH Wheel Cylinder ASM
14:1	92-4137	1	Screw-Bleed
14:2	92-4114	1	Cap-Screw, Bleed
❷14:3		1	Body
❷14:4		1	Spring
❷14:5		2	Seal-L Type
❷14:6		2	Piston
❷14:7		2	Cover-Dust
15	92-4142	1	Seal Kit
❷15:1		2	Seal-L Type
❷15:2		2	Cover-Dust

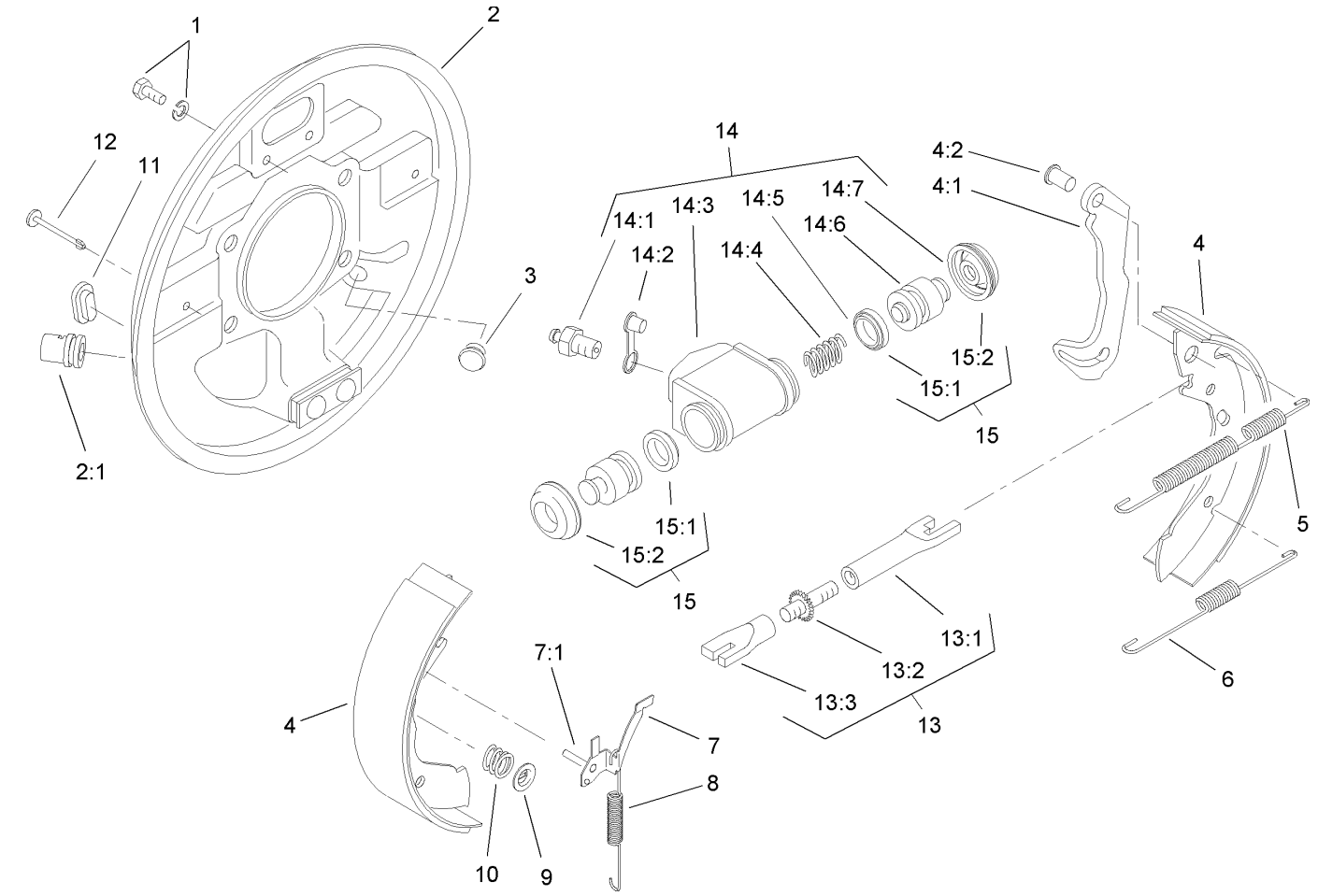

RH Rear Brake Assembly No. 93-7125

Ref	Part No.	Qty.	Description
1	92-4135	2	Bolt-Set
2	92-4100	1	RH Backplate ASM
❷2:1		1	Guide-Pipe
3	92-4146	1	Plunger ASM
4	92-4143	1	Lined Shoe Kit
❷4:1		1	Lever-Operating
❷4:2		1	Pin
5	92-4148	1	Spring-Return, Shoe (Upper, RH)
6	92-4149	1	Spring-Return, Shoe (Lower)
7	92-4124	1	RH Pawl Lever ASM
❷7:1		1	Pin-Pawl
8	92-4151	1	Spring-Adjuster, RH
9	92-4131	2	Washer-Hold Down, Shoe
10	92-4152	2	Spring-Hold Down, Shoe
11	92-4134	1	Plug-Inspection
12	92-4133	2	Pin-Hold Down, Shoe
13	92-4145	1	RH Adjustor ASM
❷13:1		1	Pushrod-Female
❷13:2		1	Bolt-Adjuster
❷13:3		1	Sleeve-Adjuster
14	92-4141	1	RH Wheel Cylinder ASM
14:1	92-4137	1	Screw-Bleed
14:2	92-4114	1	Cap-Screw, Bleed
❷14:3		1	Body
❷14:4		1	Spring
❷14:5		2	Seal-L Type
❷14:6		2	Piston
❷14:7		2	Cover-Dust
15	92-4142	1	Seal Kit
❷15:1		2	Seal-L Type
❷15:2		2	Cover-Dust

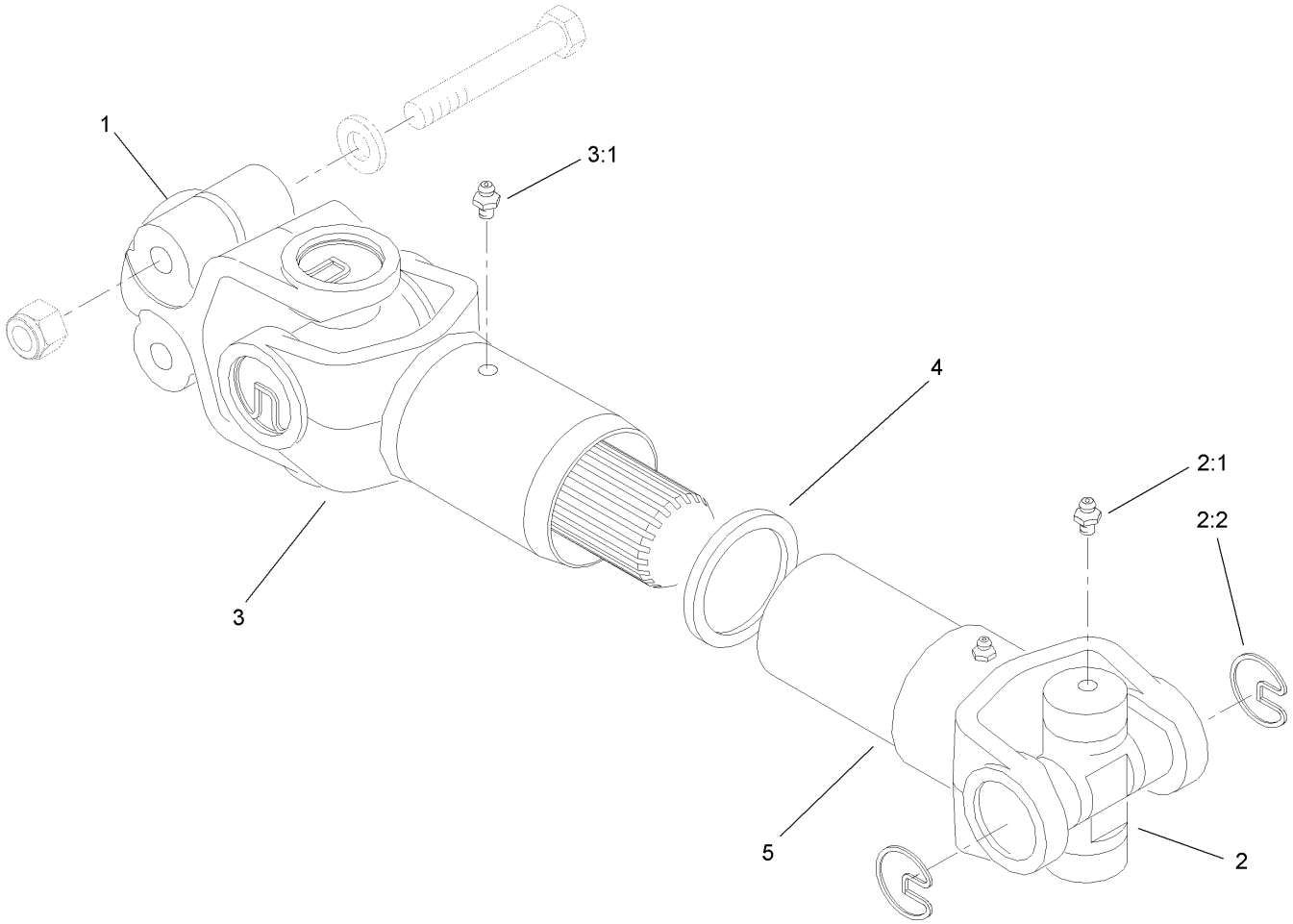

Driveshaft Assembly No. 98-2918

Ref	Part No.	Qty.	Description
1	98-2940	1	Yoke
2	92-4187	2	Cross And Bearing Kit
2:1	302-58	2	Fitting-Grease
2:2	92-4188	2	Ring-Snap
3	92-4179	1	Yoke-Tube, Shaft And Seal
3:1	302-5	1	Fitting-Grease
4	92-4180	1	Seal
5	92-4182	1	Yoke And Hub

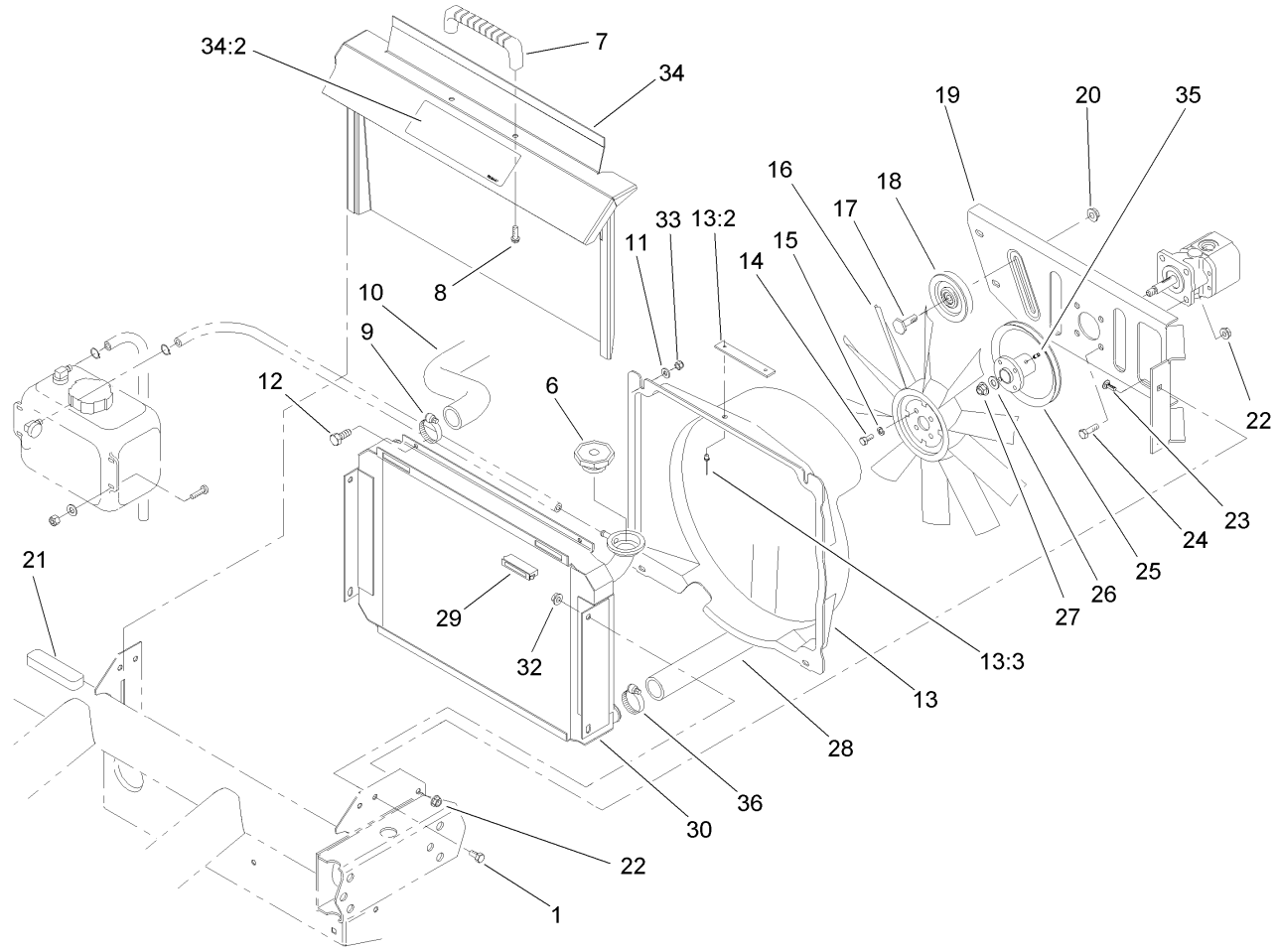

Radiator and Hydraulic Pump Assembly

Ref	Part No.	Qty.	Description
1	322-2	4	Screw-HH
6	66-3240	1	Cap-Radiator
7	65-5100	1	Handle-Door
8	46-8091	2	Screw-HWH
9	2412-34	1	Clamp-Hose
10	105-1724	1	Hose-Radiator, Upper
11	3256-22	4	Washer-Flat
12	321-4	4	Screw-HH
13	105-7956	1	Fan Shroud ASM
13:2	98-9335	1	Plate-Warning, Fan
13:3	3290-271	2	Rivet-Pop
14	321-3	4	Screw-HH
15	3253-3	4	Washer-Lock
16	84-1880	1	Fan
17	32141-86	1	Screw-Leveler
18	63-8140	1	Pulley-Idler
19	93-7088-03	1	Plate-Mount, Pump
20	3290-357	1	Nut-HHF, Whiz
21	87-9810	1	Foam-Overflow, Tank
22	3296-29	8	Nut-Lock, NI
23	3230-23	4	Screw-CARR
24	322-5	4	Screw-HH
25	94-5237	1	Fan Hub ASM
26	3256-45	1	Washer-Flat

Ref	Part No.	Qty.	Description
27	3296-5	1	Nut-Lock
28	105-1725	1	Hose-Radiator, Lower
29	58-4250	2	Catch-Magnetic
30	93-7051	1	Radiator
32	32128-20	4	Nut-HF
33	3296-42	4	Nut-Lock, NI
34	105-4223	1	Radiator Cover ASM
34:2	93-9447	1	Decal-Caution
35	3245-31	1	Screw-HSH
36	2412-3	1	Clamp-Hose

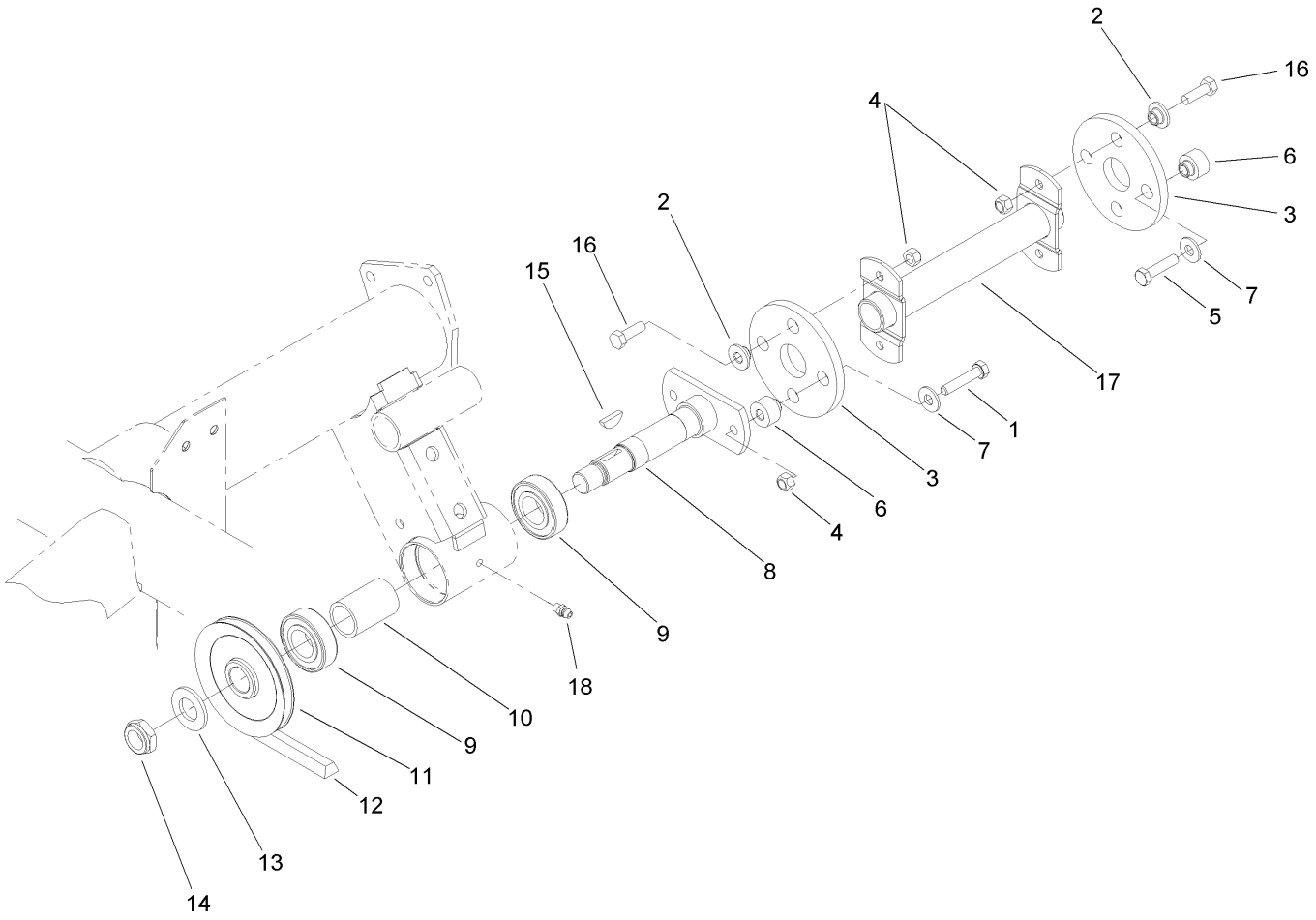

Fan and Hydraulic Pump Drive Assembly

Ref	Part No.	Qty.	Description
1	33114-040	2	Screw-HH
2	27-6600	4	Spacer-Coupling
3	44-2230	2	Coupling-Rubber
4	33024-00	6	Nut-Lock
5	48-7740	2	Screw
6	27-6590	4	Spacer-Coupling, Rubber
7	3256-3	4	Washer-Flat
8	87-2720-03	1	Shaft-Mask
9	113514	2	Bearing-Ball
10	87-2750	1	Spacer-Bearing
11	87-3370	1	Pulley And Hub ASM
12	93-7140	1	V-Belt-Pump
13	3256-28	1	Washer-Flat
14	3296-15	1	Nut-Lock, NI
15	3257-7	1	Key-Woodruff
16	33114-025	4	Screw-HH
17	87-4440-03	1	Driveshaft ASM
18	302-5	1	Fitting-Grease

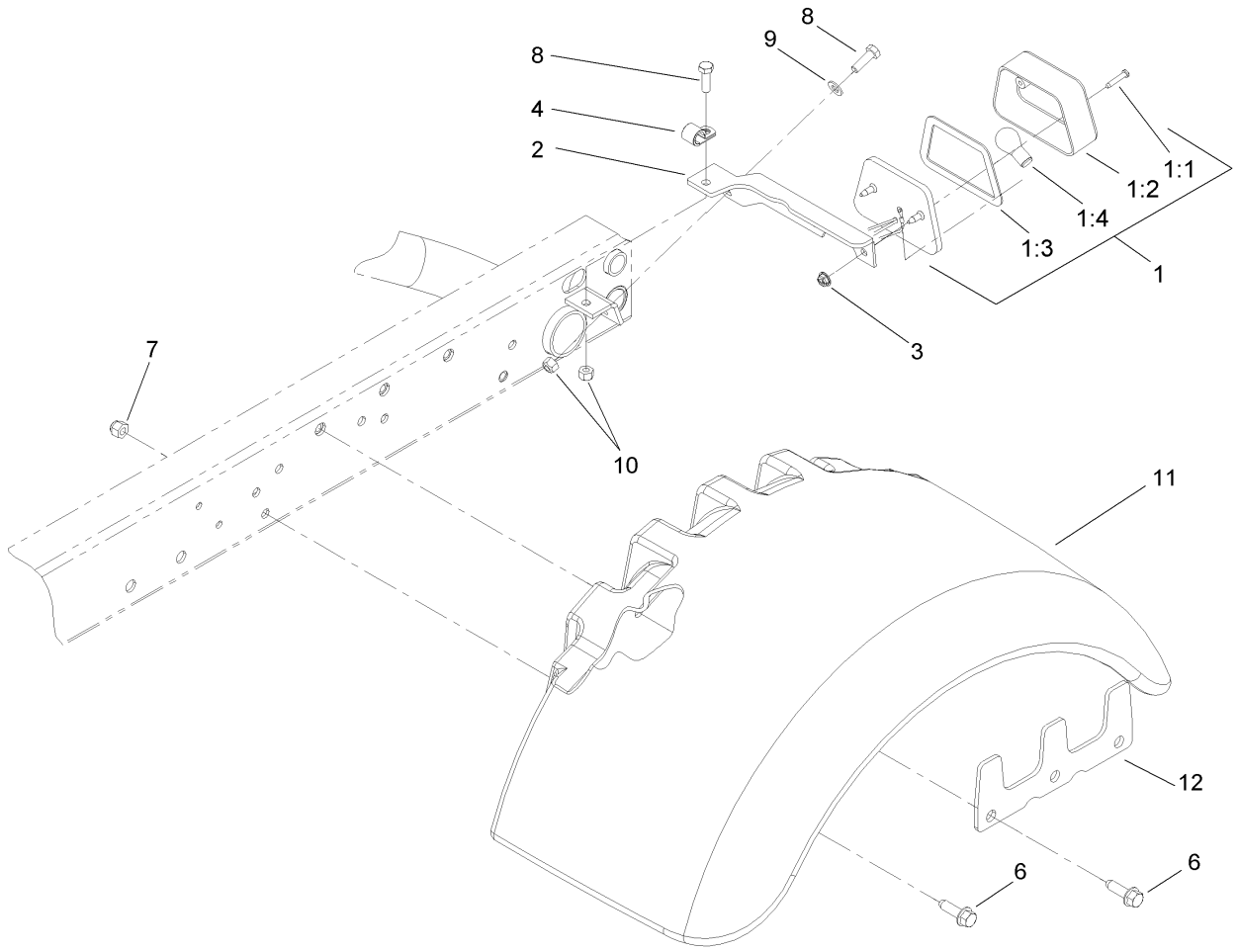

Tail Light and Fender Assembly

Ref	Part No.	Qty.	Description
1	87-2110	1	Light-Tail / Brake
1:1	32144-93	4	Screw-PPHTF
1:2	87-6300	2	Lens-Light, Tail
1:3	87-6310	2	Gasket-Light, Tail
❷1:4		1	Bulb
2	106-7872-03	1	LH Tail Light Bracket ASM
3	3290-506	2	Palnut
4	2412-93	1	Clamp-R
6	32144-109	10	Screw
7	3296-39	2	Nut-Lock, NI
8	322-5	2	Screw-HH
9	3256-23	1	Washer-Flat
10	3296-29	2	Nut-Lock, NI
11	106-2373	2	Fender-Rear
12	106-7895-03	2	Plate-Support

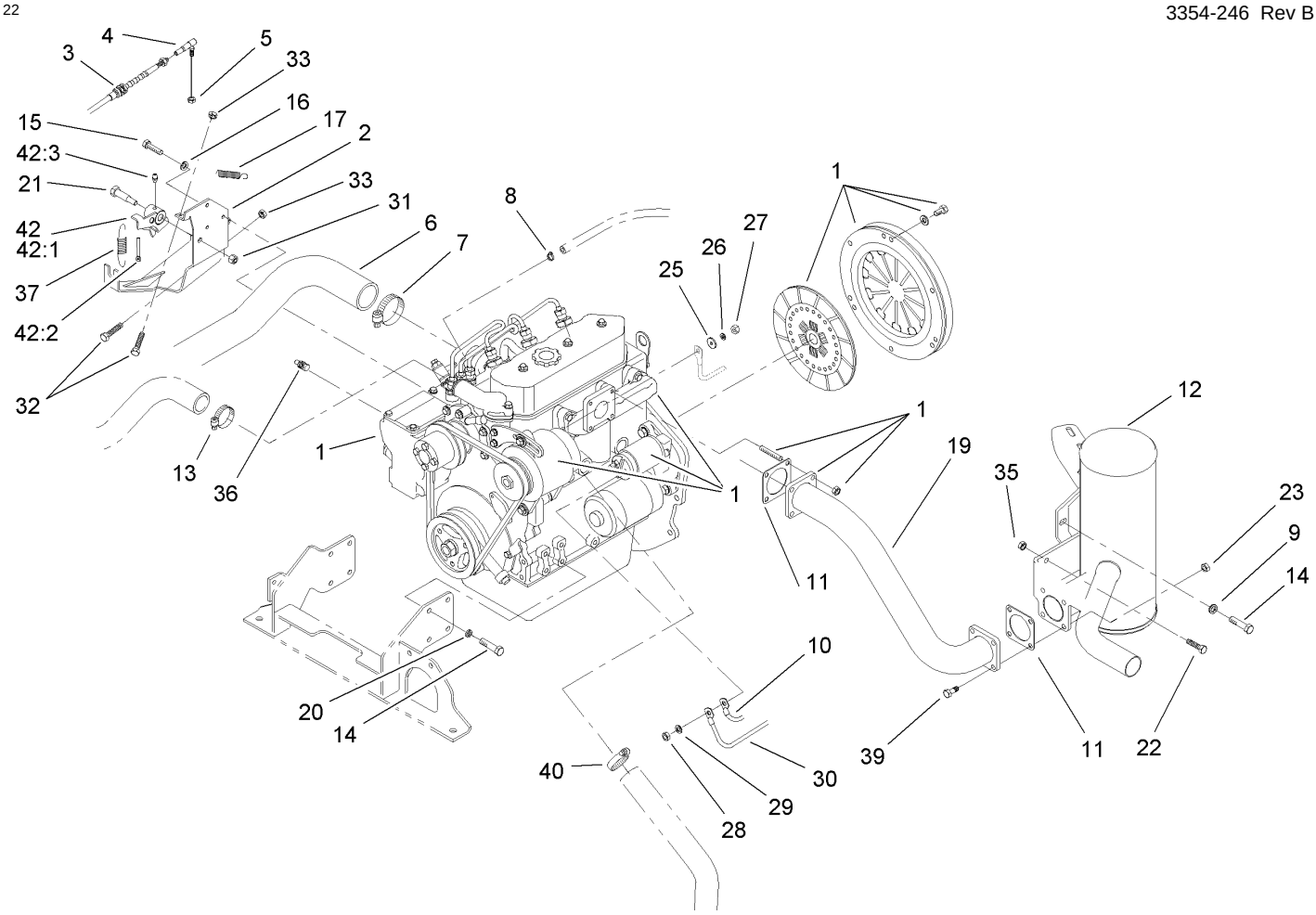

Engine Assembly

Ref	Part No.	Qty.	Description
1	104-9218	1	Engine ASM
2	106-2445-03	1	Throttle Bracket ASM
3	110-2549	1	Cable-Accelerator
4	18-1720	1	Governor Ball Joint ASM
5	3296-3	1	Nut-Lock
6	107-7961	1	Hose-Intake
7	2412-92	1	Clamp-Hose
8	2412-108	1	Clamp-Worm
9	87-8640	1	Washer-Flat
10	99-3441	1	Harness-Wire, Fusible Link
11	105-4209	2	Gasket-Muffler
12	105-1778	1	Muffler-Exhaust
13	2412-34	1	Clamp-Hose
14	33114-020	9	Screw-HH
15	33103-016	3	Screw-HHF
16	3253-3	3	Washer-Lock
17	87-4020	1	Spring-Extension
19	108-3066	1	Exhaust Tube ASM
20	3253-4	8	Washer-Lock
21	7-0030	1	Bolt-Shoulder
22	322-5	2	Screw-HH
23	32128-25	4	Nut-HF
25	3256-2	1	Washer-Flat
26	43-5920	1	Washer-Lock, Spring

Ref	Part No.	Qty.	Description
27	48-7880	1	Nut-Hex
28	33014-00	1	Nut-Hex
29	3254-2	1	Washer-Lock, Internal
30	87-3070	1	Cable-Battery, Positive
31	3296-29	1	Nut-Lock, NI
32	321-7	2	Screw-HH
33	3218-1	2	Nut-Jam
35	32128-20	2	Nut-HF
36	94-7621	1	Sender-Temperature
37	107-7958	1	Spring-Governor
39	3274-22	4	Screw-HSH
40	2412-3	1	Clamp-Hose
42	108-6933	1	Bellcrank Service ASM
42:1	108-6925	1	Bellcrank ASM
42:2	108-6932	1	Rod-Link, Governor
42:3	302-5	1	Fitting-Grease

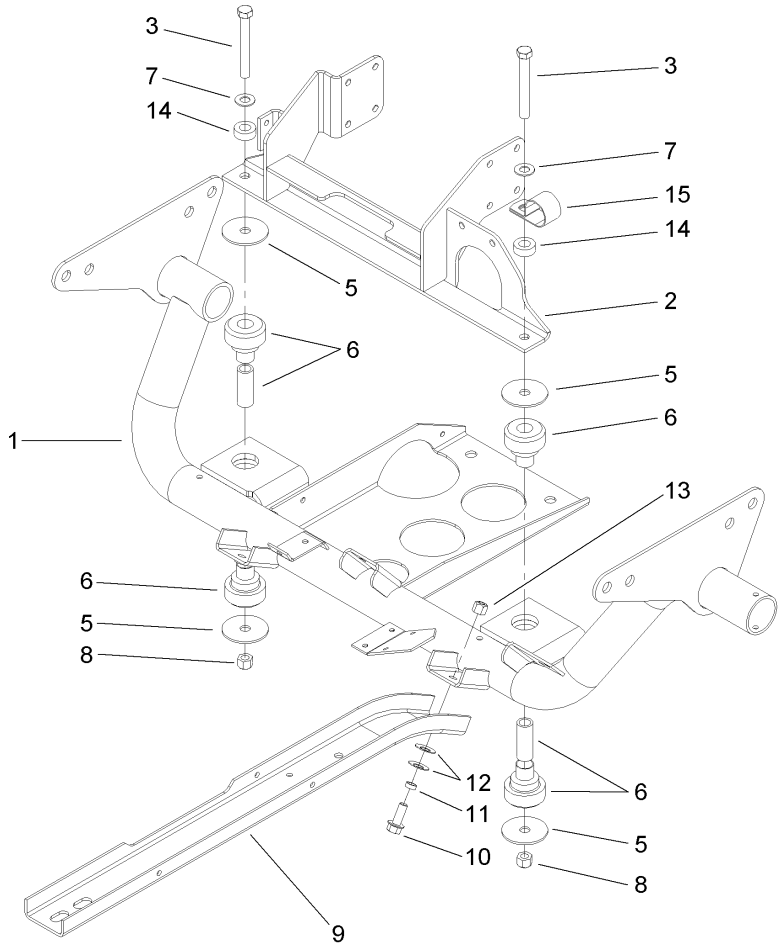

Engine Support Assembly

Ref	Part No.	Qty.	Description
1	105-4200-03	1	Engine Support ASM
2	104-9238-03	1	Engine Mount ASM
3	324-19	2	Screw-HH
5	87-5100	4	Washer-Snubbing
6	106-7865	2	Engine Mount ASM
7	3256-25	2	Washer-Flat
8	3296-48	2	Nut-Lock, NI
9	87-4730-03	2	Guard-Belly
10	3234-11	6	Screw-HHF
11	76-9100	6	Spacer-Speed, Reel
12	3290-413	12	Washer-Belleville
13	3296-39	6	Nut-Lock, NI
14	59-2290	2	Spacer
15	2412-82	1	Clamp

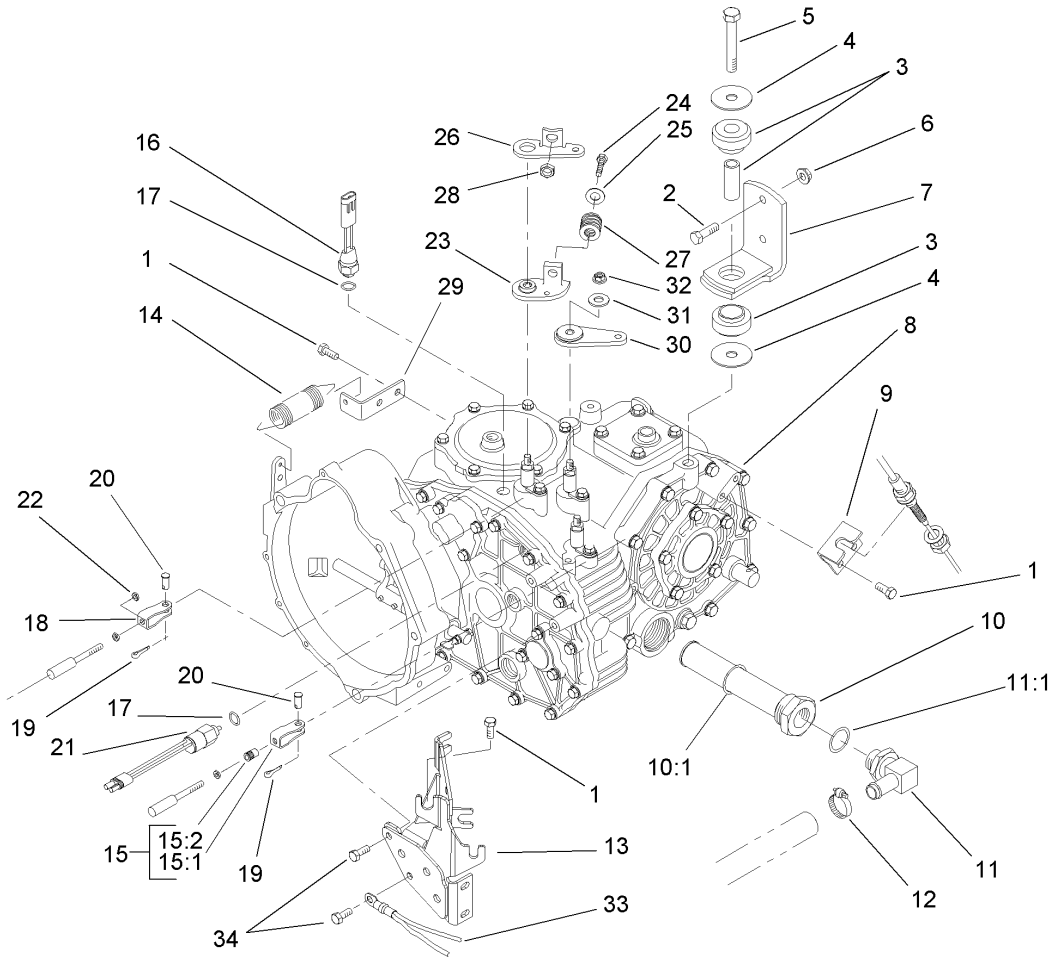

Transaxle Assembly

Ref	Part No.	Qty.	Description
1	33114-020	5	Screw-HH
2	323-7	4	Screw-HH
3	106-7865	2	Engine Mount ASM
4	87-5100	4	Washer-Snubbing
5	33116-080	2	Screw-HH
6	3296-39	4	Nut-Lock, NI
7	87-5800-03	2	Transaxle Mount ASM
8	105-4190	1	4Wd Transaxle ASM
9	87-4470	1	Bracket-Lock, Differential
10	87-3990	1	Strainer-Transaxle
10:1	237-123	1	O-Ring
11	353-987	1	Fitting-HYD, 90 DEG
11:1	237-81	1	O-Ring
12	2412-34	1	Clamp-Hose
13	105-4207-03	1	Cable Mount ASM
14	68-9950	1	Spring-Traction
15	87-7160	1	Cable Clevis ASM
15:1	87-2310	1	Clevis-Cable
15:2	32148-15	1	Nut-Insert
16	72-4310	1	Switch-Ball
17	237-30	2	O-Ring
18	87-2310	2	Clevis-Cable
19	3272-6	3	Pin-Cotter
20	283-62	3	Pin-Clevis

Ref	Part No.	Qty.	Description
21	87-6710	1	Switch-Transmission
22	3220-1	2	Nut-Jam
23	87-7970	1	Arm-Shift
24	323-10	1	Screw-HH
25	3256-4	1	Washer-Flat
26	87-8250	1	Plate-Arm, Shift
27	87-6910	1	Spring-Compression
28	32128-21	1	Nut-HF
29	87-7170	1	Bracket-Spring, Clutch
30	87-7960	2	Lever-Shift
31	80-6990	3	Washer-Hardened
32	48-9520	3	Nut
33	87-3080	1	Cable-Battery, Negative
34	33114-025	2	Screw-HH

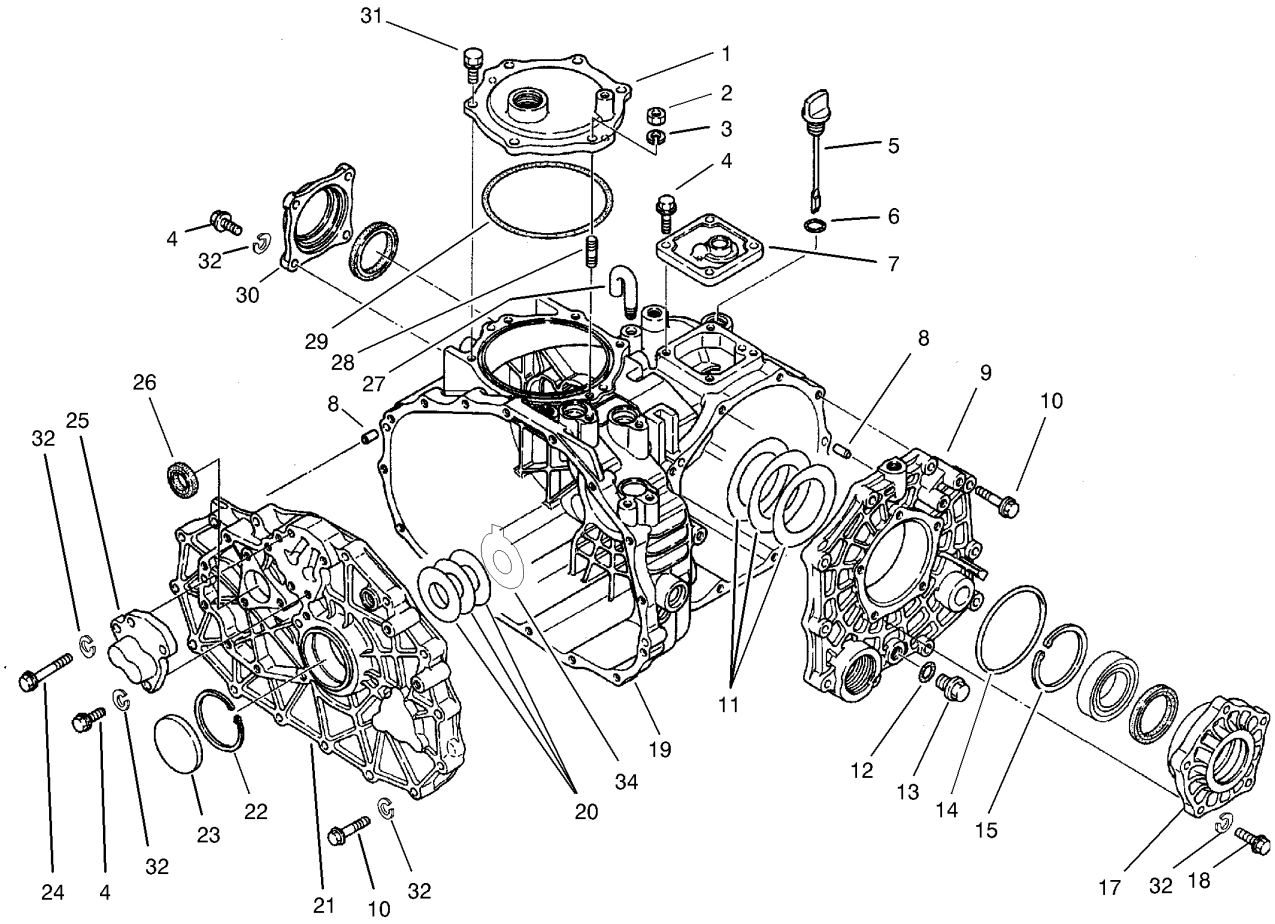

Case Assembly
Transaxle Assembly No. 105-4190

Ref	Part No.	Qty.	Description
1	92-0656	1	Cover-Upper, PTO
2	68-9400	1	Nut-Flange
3	92-0762	1	Washer-Spring
4	33114-025	11	Screw-HH
5	92-0662	1	Cap-Oil
6	92-0788	1	O-Ring
7	92-0652	1	Cover-Upper
8	92-0765	4	Pin-Parallel
9	92-0653	1	Cover-Side
10	33114-040	25	Screw-HH
11	92-0809	1	Set-Shim
12	92-0787	1	O-Ring
13	92-0773	1	Plug-Drain
14	92-0789	1	O-Ring
15	92-0760	1	Ring-Snap
17	92-0654	1	Carrier-Differential
18	33114-030	5	Screw-HH
19	92-0651	1	Case-Transmission
20	100-4460	1	Shim Set
21	100-4462	1	Plate-Center, 4Wd
22	92-0759	1	Ring-Snap
23	92-0807	1	Cap-Sealing
24	48-7560	1	Bolt-HH
25	92-0706	1	Shaft-Fork

Ref	Part No.	Qty.	Description
26	92-0791	1	Seal-Oil
27	92-0743	1	Breather-Air
28	92-0804	1	Stud
29	92-0790	1	O-Ring
30	92-0655	1	Cover-Seal, Axle
31	92-0796	5	Bolt
32	3253-4	42	Washer-Lock
34	100-4465	1	Shim (W/Tab)

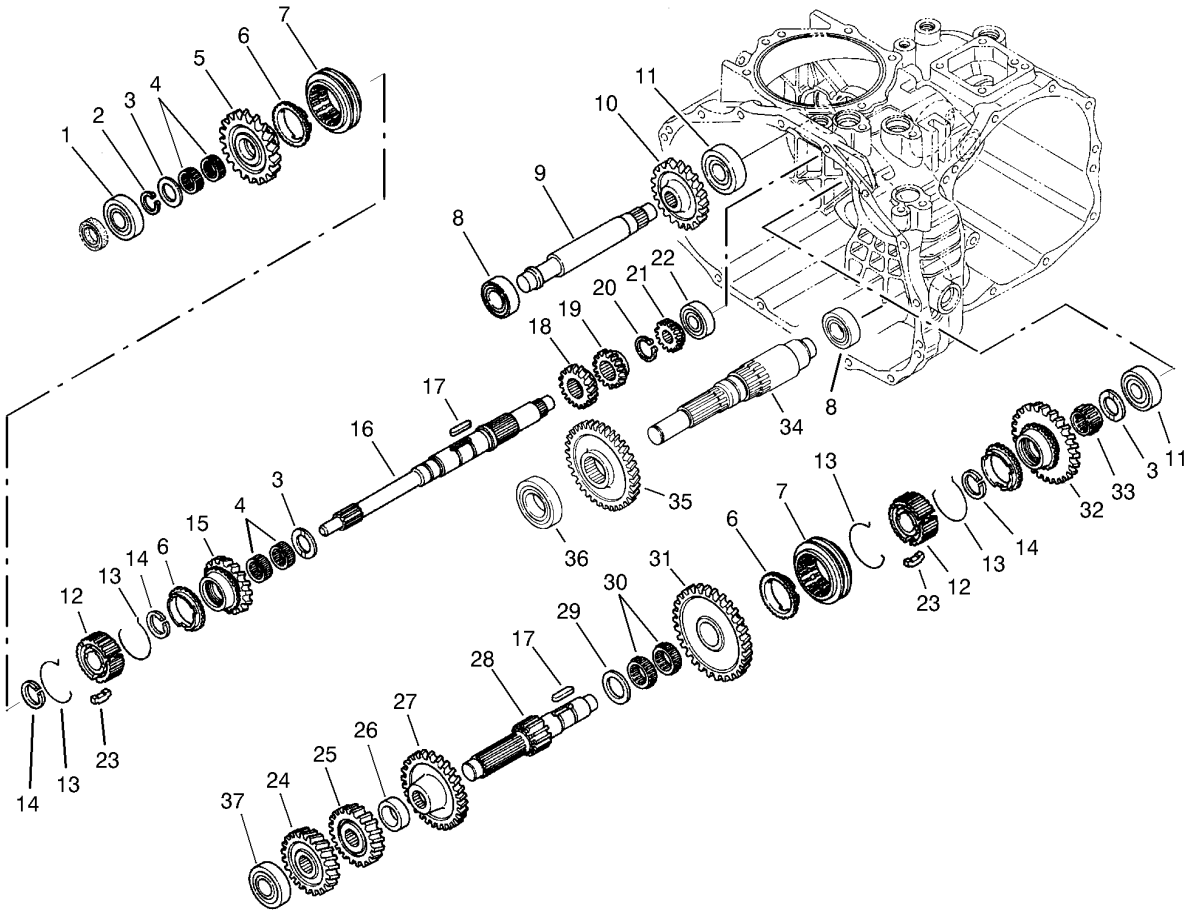

Gear Shaft Assembly
Transaxle Assembly No. 105-4190

Ref	Part No.	Qty.	Description
1	251-8	1	Bearing-Ball
2	92-0753	1	Ring-Snap
3	92-0740	3	Washer-Thrust
4	92-0781	4	Bearing-Needle
5	92-0820	1	Gear-Main, 27 Tooth
6	92-0667	3	Ring-Synchro
7	92-0668	2	Shifter-Synchro
8	251-346	2	Bearing-Ball
9	92-0824	1	Shaft-Idler, Reverse
10	92-0684	1	Gear-Reverse, 33 Tooth
11	92-0778	2	Bearing
12	92-0664	2	Hub-Synchro
13	92-0666	4	Spring-Synchro
14	92-0763	3	Ring-Snap
15	92-0821	1	Gear-Main, 24 Tooth
16	92-0663	1	Shaft-Main
17	92-0772	2	Key
18	92-0687	1	Gear-Main, 16 Tooth
19	92-0672	1	Gear-Main, 18 Tooth
20	92-0754	1	Ring-Snap
21	92-0673	1	Gear-Main, 14 Tooth
22	92-0650	1	Bearing
23	92-0665	6	Key-Synchro
24	92-0822	1	Gear-Reduction, 28 Tooth

Ref	Part No.	Qty.	Description
25	92-0679	1	Gear-Reduction, H23 Tooth
26	92-0680	1	Collar
27	92-0823	1	Gear-Reduction, 43 Tooth
28	92-0674	1	Shaft-Reduction
29	92-0682	1	Washer-Thrust
30	92-0681	2	Bearing-Needle
31	92-0677	1	Gear-Reduction, 49 Tooth
32	92-0819	1	Gear-Reduction, 40 Tooth
33	92-0782	1	Bearing-Needle
34	92-5183	1	Driveshaft-Front
35	92-5184	1	Gear
36	92-5185	1	Bearing
37	105-7985	1	Bearing

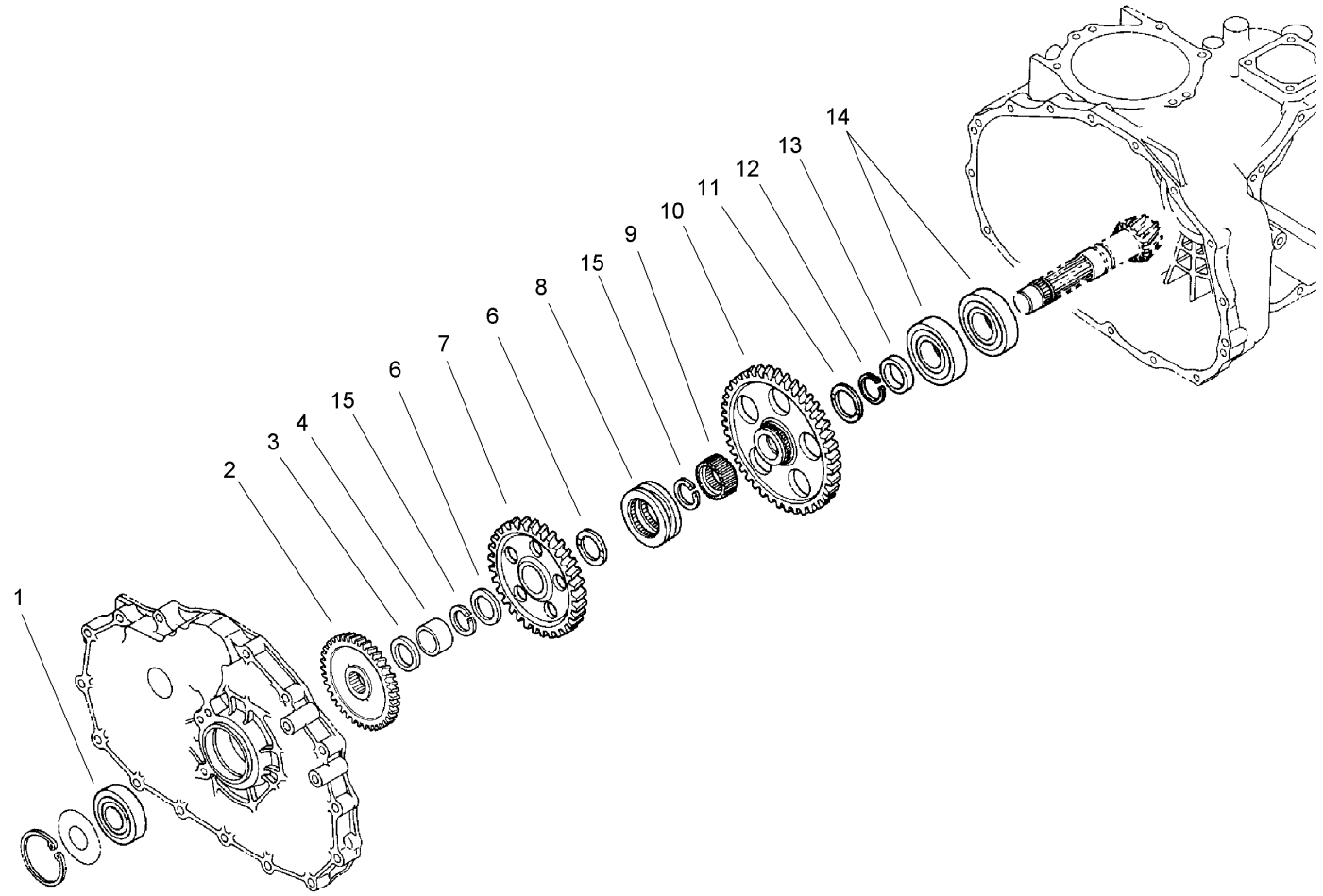

Countershaft Assembly
Transaxle Assembly No. 105-4190

Ref	Part No.	Qty.	Description
1	92-0712	1	Bearing-Ball
2	92-5186	1	Pinion
3	92-0716	1	Collar
4	92-0783	1	Race-Inner
6	92-0711	2	Washer-Thrust
7	92-0715	1	Gear-Shaft, Counter
8	92-0718	1	Shifter
9	105-7986	1	Collar-Spline
10	92-0717	1	Gear-Shaft, Counter
11	92-0741	1	Washer-Thrust
12	92-0755	1	Ring-Snap
13	92-0713	1	Collar
14	92-0714	2	Bearing
15	105-7987	2	Ring-Snap

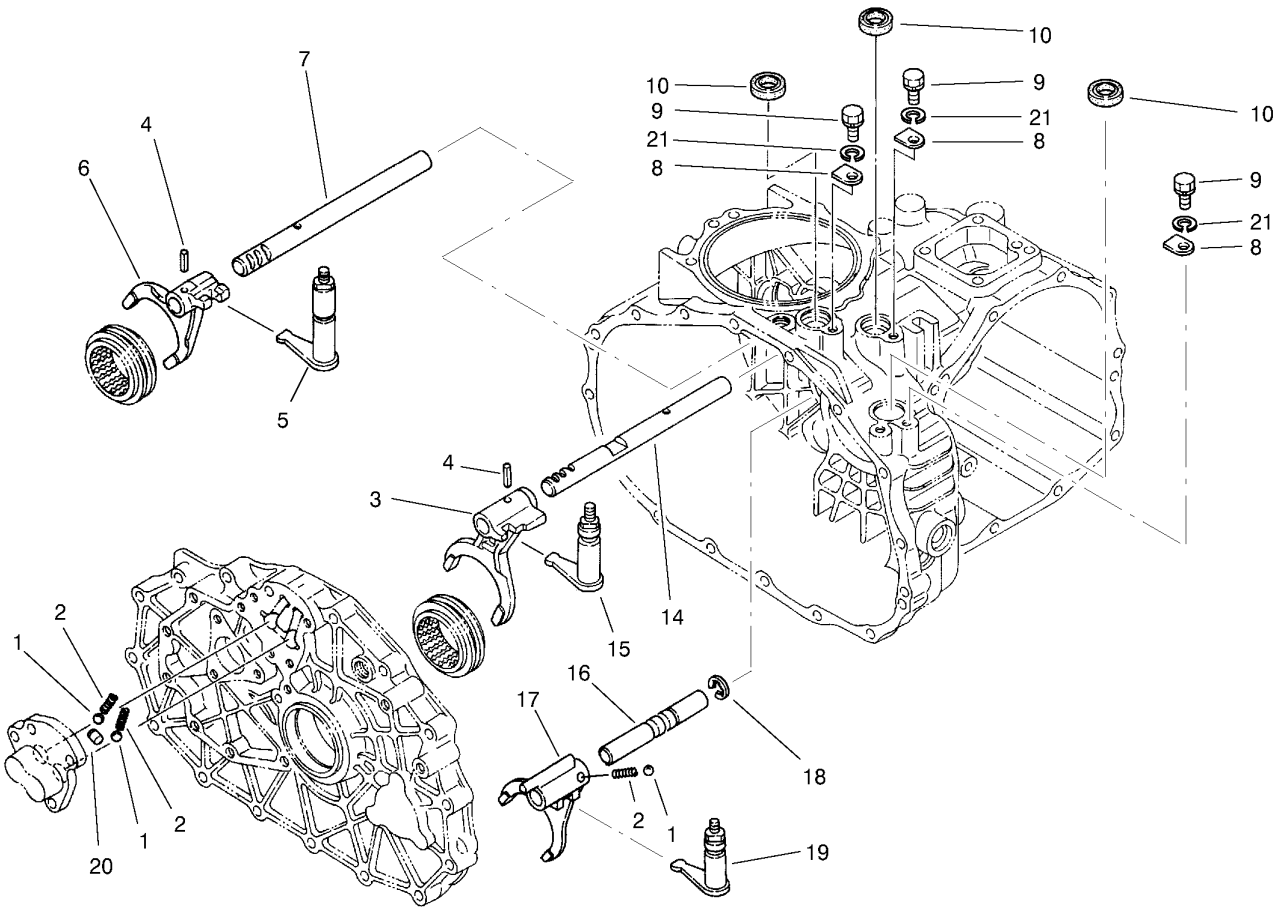

Shift Fork Assembly
Transaxle Assembly No. 105-4190

Ref	Part No.	Qty.	Description
1	92-0785	3	Ball-Steel
2	92-0731	3	Spring
3	92-0700	1	Fork-Shift
4	92-0769	2	Pin-Roll
5	92-0817	1	Arm-Shift
6	92-0701	1	Fork-Shift
7	92-0699	1	Shaft-Fork
8	92-0732	3	Plate-Keeper
9	48-7700	3	Screw-HH
10	92-0729	3	Seal-Oil
14	92-0698	1	Shaft-Fork
15	92-0816	1	Arm-Shift
16	92-0708	1	Shaft-Fork
17	92-0709	1	Fork-Shift
18	92-0761	1	Ring-E
19	92-0818	1	Arm-Shift
20	92-0705	1	Lock-Spindle
21	42-9850	3	Washer-Lock, Spring

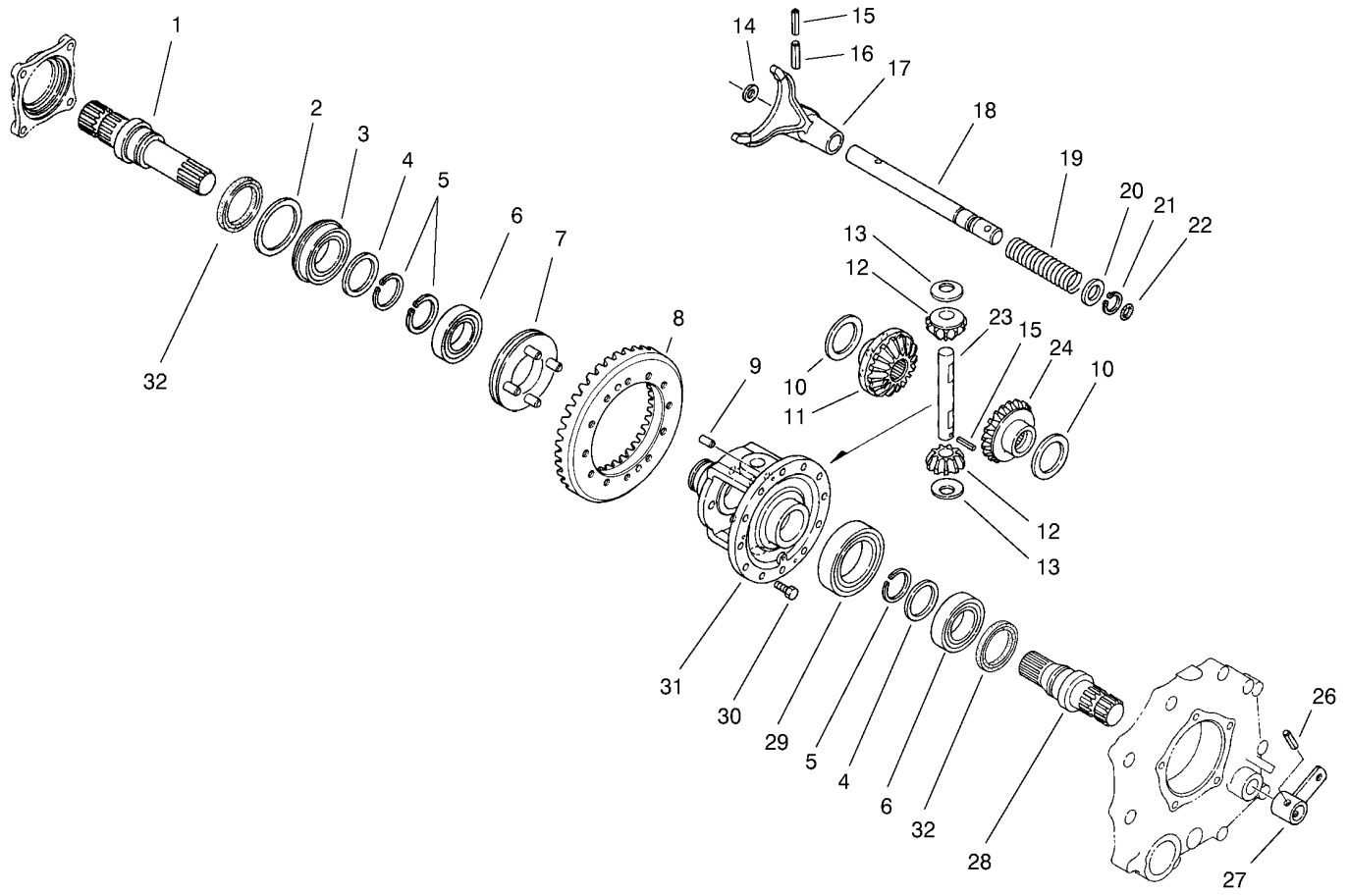

Differential Gear Assembly
Transaxle Assembly No. 105-4190

Ref	Part No.	Qty.	Description
1	92-0726	1	Shaft-Axle, Right
2	92-0728	1	Washer
3	92-0780	1	Bearing
4	92-0727	2	Washer
5	92-0756	3	Ring-Snap
6	92-0775	2	Bearing
7	92-0730	1	Slider-Differential, Lock
8	105-7983	1	Countershaft And Ring Gear
9	92-0765	2	Pin-Parallel
10	92-0747	2	Side-Gear, Left Inner
11	92-0746	1	Gear-Side, RH
12	92-0748	2	Pinion-Differential
13	92-0750	2	Washer
14	92-0744	1	Washer
15	92-0768	2	Pin-Roll, Spring
16	92-0771	1	Pin-Roll, Spring
17	92-0721	1	Fork-Lock, Differential
18	92-0722	1	Shaft-Fork, Lock Differential
19	92-0723	1	Spring-Lock, Differential
20	92-0733	1	Washer
21	92-0753	1	Ring-Snap
22	92-0787	1	O-Ring
23	92-0749	1	Shaft-Pinion
24	92-0745	1	Gear-Side, LH

Ref	Part No.	Qty.	Description
26	92-0770	1	Pin-Roll, Spring
27	92-0724	1	Arm-Lock, Differential
28	92-0725	1	Shaft-Axle, Left
29	92-0776	1	Bearing
30	92-0803	12	Bolt
31	92-0720	1	Case-Differential
32	92-0793	2	Seal-Oil

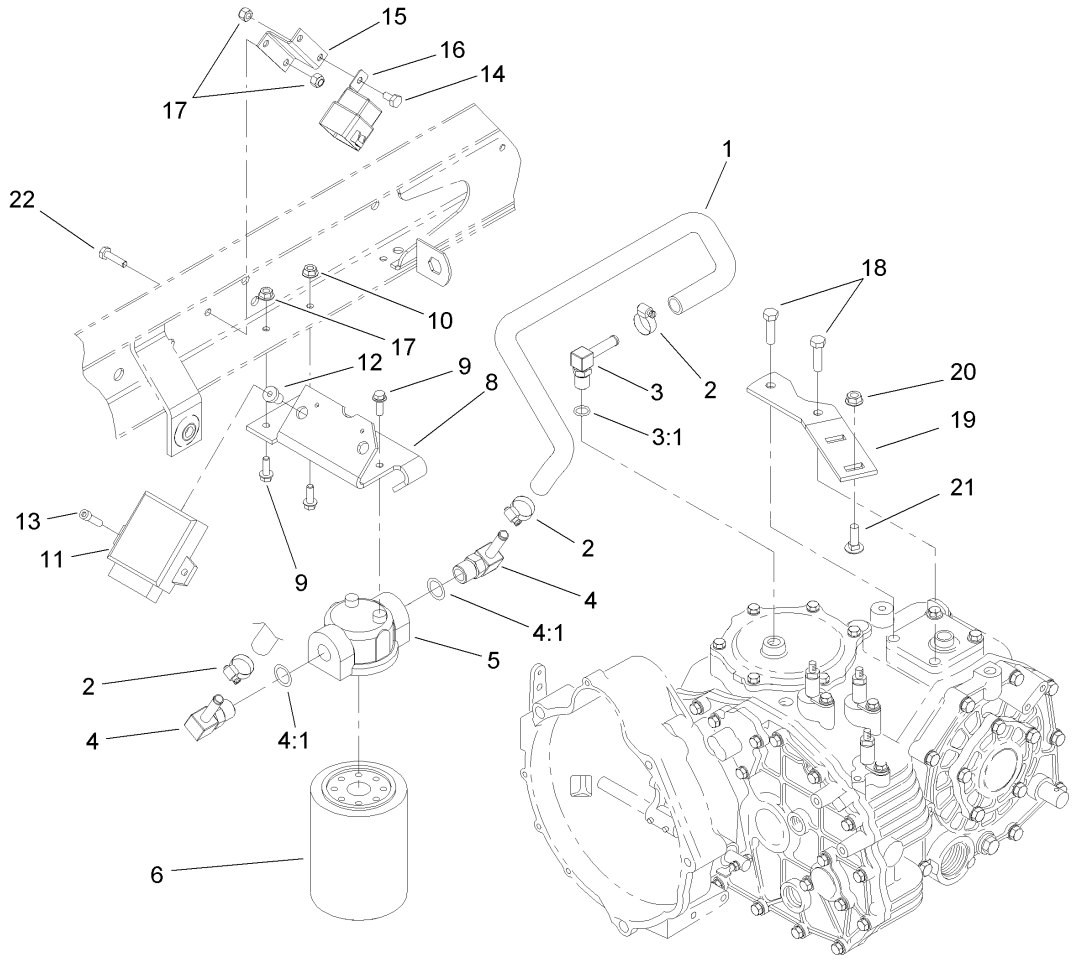

Hydraulic Filter and Relay Assembly

Ref	Part No.	Qty.	Description
1	87-5730	1	Hose
2	2412-36	3	Clamp-Hose
3	100-4887	1	Fitting-Barb
3:1	237-42	1	O-Ring
4	354-134	2	Fitting-HYD, 90 DEG
4:1	237-79	1	O-Ring
5	87-8780	1	Head-Filter
6	54-0110	1	Filter-Oil, Transmission
8	105-4199	1	Bracket-Mount, Filter
9	3234-4	3	Screw-HHF
10	32128-33	1	Nut-HF
11	105-1768	1	Ecm
12	32117-1	2	Nut-Insert
13	3274-9	2	Screw-HSH
14	321-2	2	Screw-HH
15	105-1776	1	Bracket-Mount, Relay
16	99-7430	2	Relay
17	32128-33	4	Nut-HF
18	33114-030	2	Screw-HH
19	105-9472	1	Plate-Mount, Muffler
20	32128-20	2	Nut-HF
21	3230-2	2	Bolt-CARR
22	321-4	2	Screw-HH

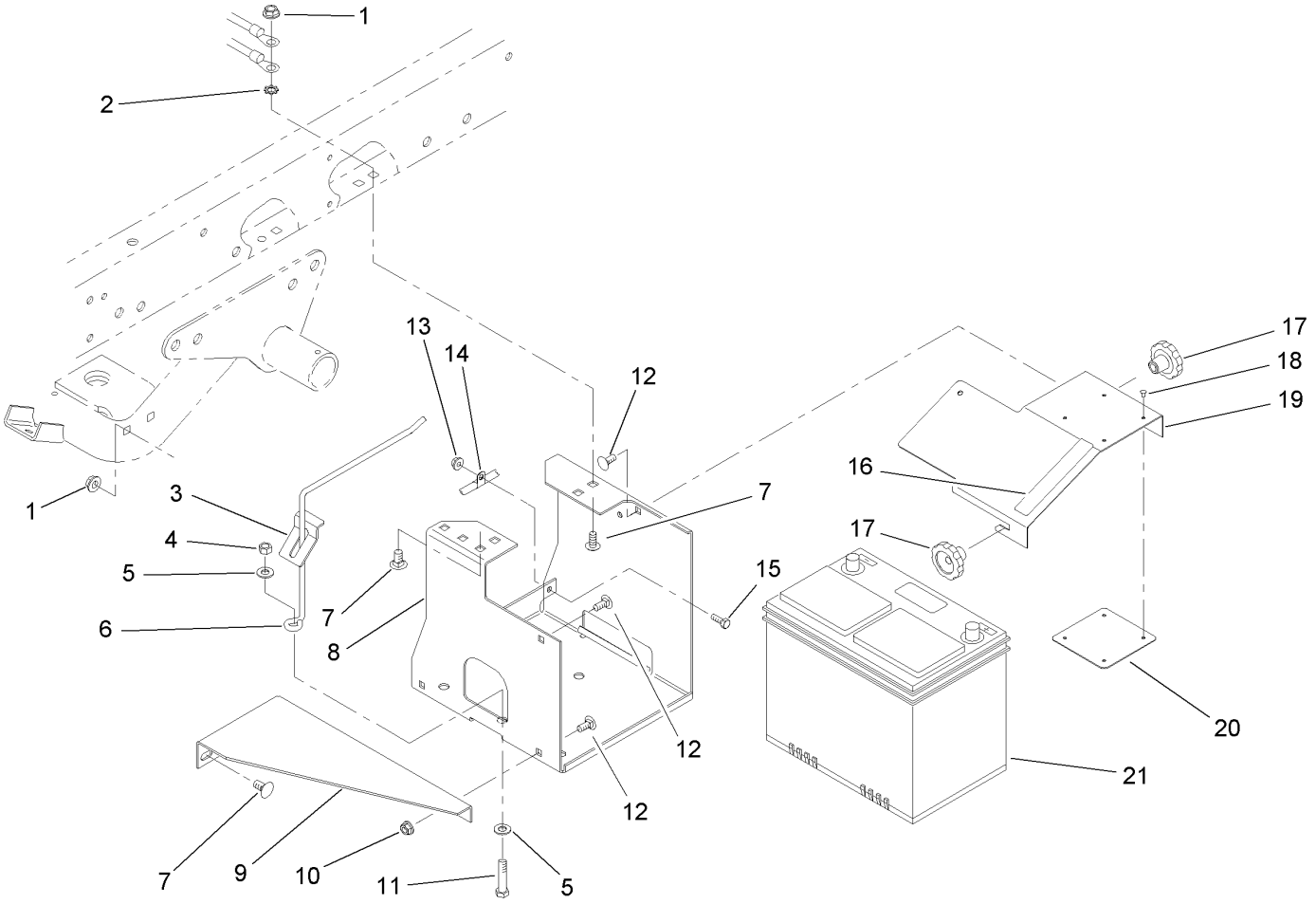

Battery Assembly

Ref	Part No.	Qty.	Description
1	3290-357	6	Nut-HHF, Whiz
2	3255-9	1	Washer-Lock, EXT
3	87-7610	1	Tab-Support, Battery
4	3296-39	1	Nut-Lock, NI
5	3256-24	2	Washer-Flat
6	87-7600	1	Rod-Support, Battery
7	3231-21	6	Screw-CARR
8	87-5120-03	1	Bracket-Holder, Battery
9	87-5110-03	1	Support-Base, Battery
10	32128-20	2	Nut-HF
11	323-9	1	Screw-HH
12	3230-23	4	Screw-CARR
13	32128-33	1	Nut-HF
14	2412-89	1	Clamp
15	321-4	1	Screw-HH
16	93-6687	1	Decal-No Step
17	19-4050	2	Knob
18	3269-27	4	Rivet-Snap
19	87-5130-03	1	Cover-Battery
20	87-7620	1	Shield-Terminal, Battery
21	106-5190	1	Battery

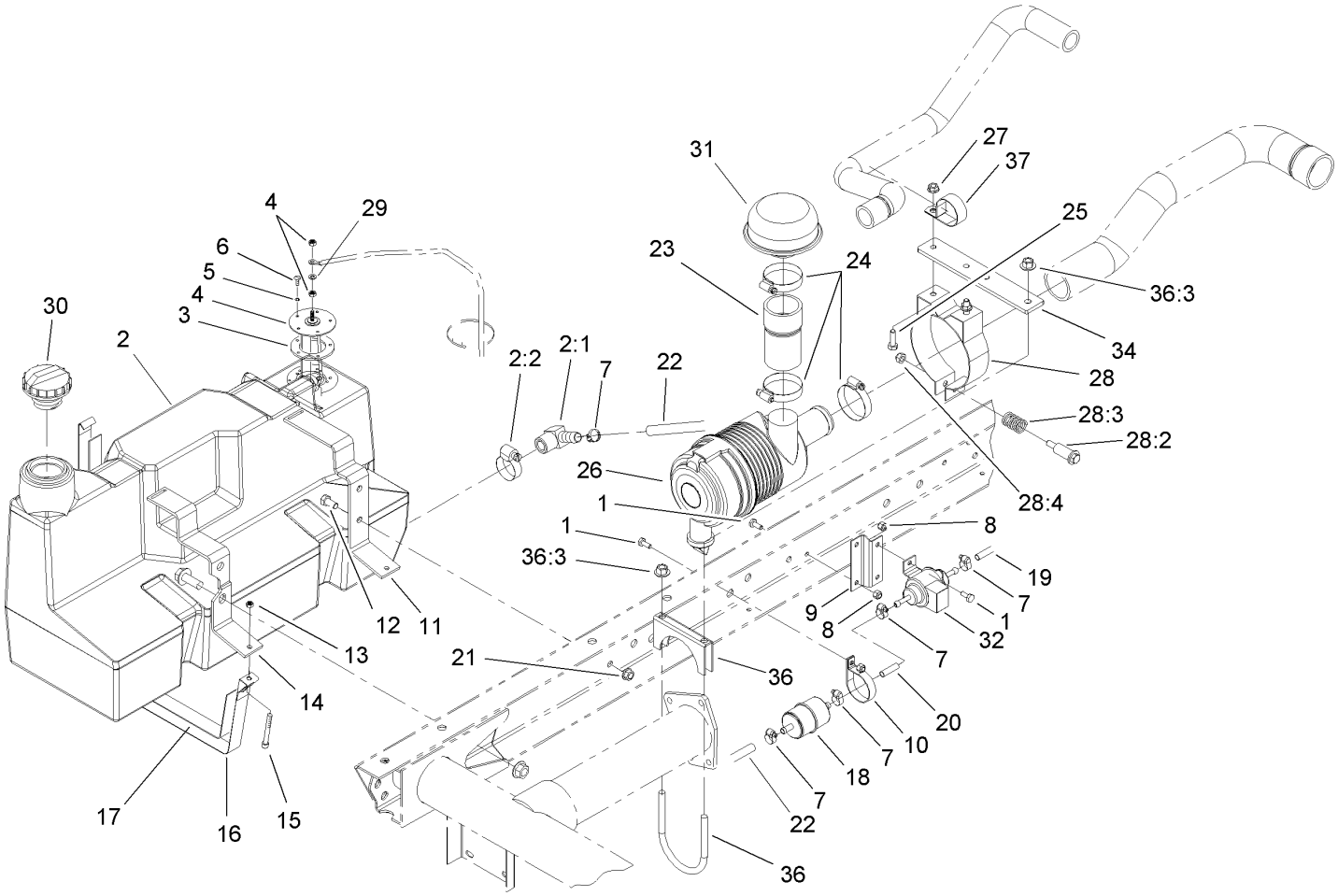

Fuel Tank and Air Cleaner Assembly

Ref	Part No.	Qty.	Description
1	321-3	5	Screw-HH
2	98-2919	1	Tank-Fuel
2:1	353-781	1	Fitting-Elbow
2:2	2412-36	1	Clamp-Hose
3	62-7650	1	Gasket
4	63-7640	1	Sender-Fuel
5	3253-15	5	Washer-Lock
6	32122-24	5	Screw-PTH
7	2412-108	5	Clamp-Worm
8	32128-33	5	Nut-HF
9	105-1774	1	Bracket-Pump, Fuel
10	2412-148	1	Clamp-R
11	87-3140-03	1	Support-Gas Tank, Rear
12	323-4	2	Screw-HH
13	3296-42	2	Nut-Lock, NI
14	87-3150-03	1	Support-Gas Tank, Front
15	3274-54	2	Screw-HSH
16	87-3160	2	Strap-Tank, Gas
17	87-3170	2	Felt-Strap
18	105-8045	1	Filter-Fuel
19	109-0296	1	Hose-Fuel
20	110-1876	1	Hose-Fuel
21	3290-357	2	Nut-HHF, Whiz
22	109-0274	1	Hose-Fuel

Ref	Part No.	Qty.	Description
23	107-7962	1	Hose-Cleaner, Air
24	2412-92	3	Clamp-Hose
25	322-5	2	Screw-HH
26	106-2416	1	Aircleaner ASM
27	32128-20	2	Nut-HF
28	93-2191	1	Band-Mounting, Air Cleaner
❷28:1		1	Clamp ASM
28:2	94-3653	1	Bolt
28:3	94-3654	1	Spring
28:4	48-9510	1	Nut
29	5-3637	1	Spacer
30	93-3101	1	Cap-Fuel
31	46-7510	1	Hood-Inlet, Air
32	99-9196	1	Pump-Fuel
34	106-7948-03	1	Bracket-Mount
36	107-7954	1	Clamp-Muffler
36:3	32128-43	2	Nut-Flange
37	2412-147	1	Clamp

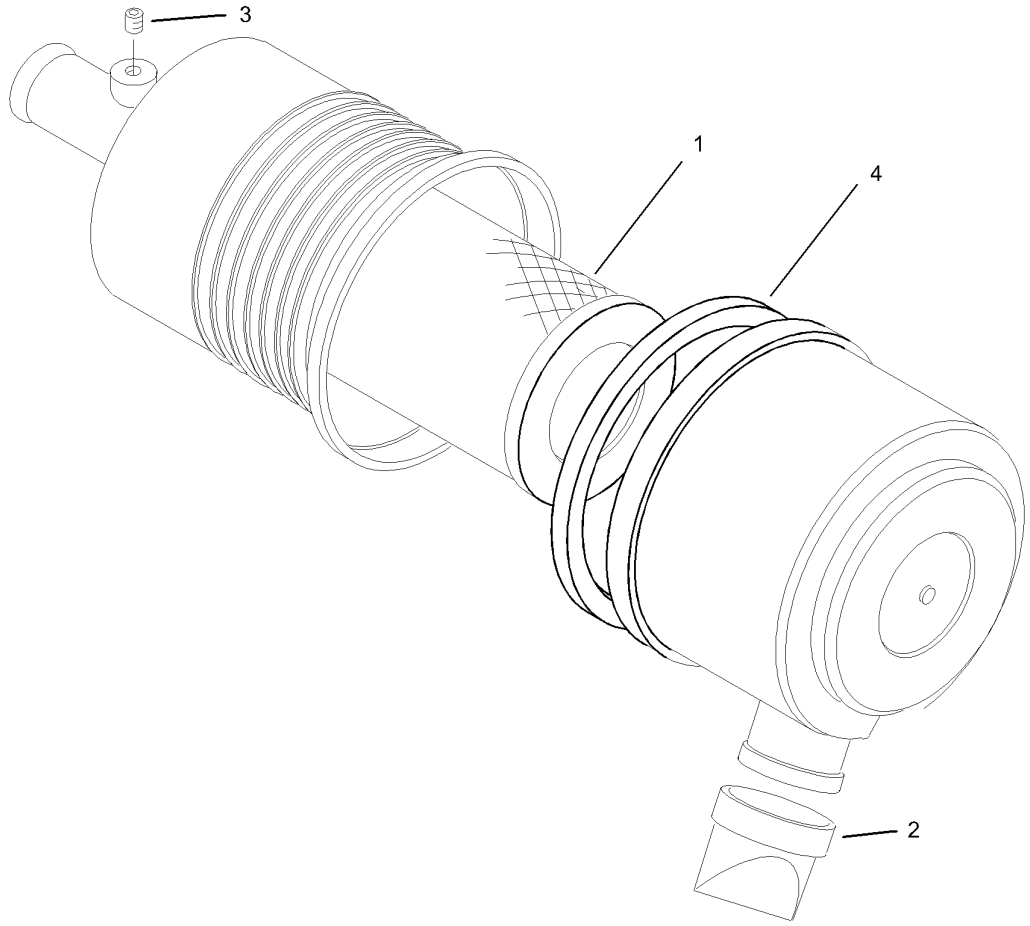

Air Cleaner Assembly No. 106-2416

Ref	Part No.	Qty.	Description
1	108-3811	1	Filter-Air
2	104-0498	1	Valve-Vacuator
3	285-17	1	Plug-Pipe
4	106-6748	1	Gasket

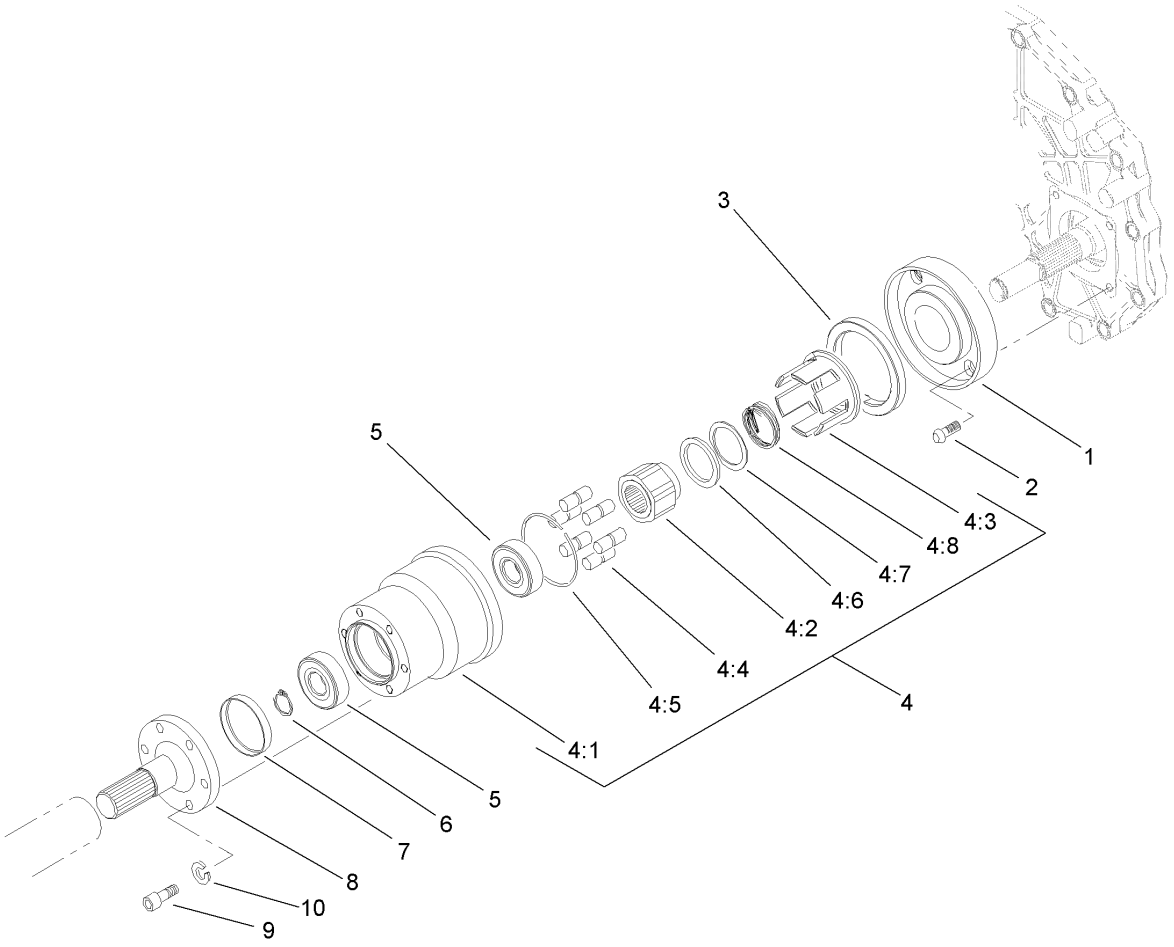

Bi-directional Over Running Clutch Assembly

Ref	Part No.	Qty.	Description
1	93-7117	1	Plate-Adapter
2	3274-96	4	Screw
3	87-9360	1	Seal-Oil
4	106-7866	1	Clutch-Bidirectional
4:1	105-1759	1	Housing-Clutch
4:2	93-8924	1	Cam
4:3	106-7867	1	Roll Cage ASM
4:4	93-8925	6	Roller
4:5	93-8922	1	Spring-Garter
4:6	93-8919	1	Bearing-Needle, Thrust
4:7	93-8929	1	Washer-Thrust
4:8	93-8923	1	Spring-Wave
5	251-8	2	Bearing-Ball
6	87-9370	1	Ring-Retaining
7	87-9220	1	Plug-Clutch
8	87-9840-03	1	Shaft-Clutch
9	3274-97	6	Screw-HSH
10	3253-4	6	Washer-Lock

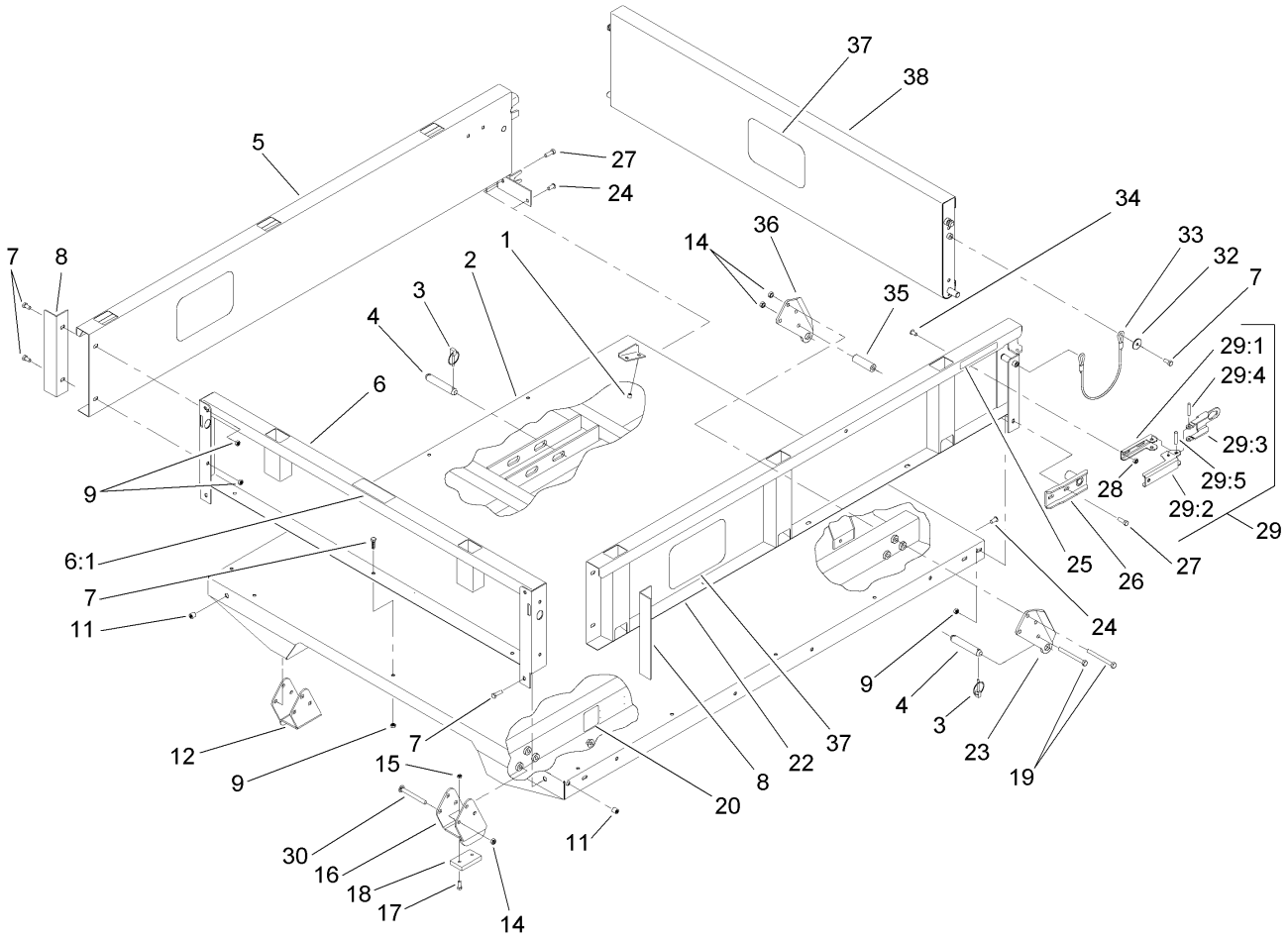

Full Bed and Side Panel Assembly

Ref	Part No.	Qty.	Description
1	32148-6	4	Insert-Nut
2	93-9724-03	1	Flatbed-Full
3	92-1298	8	Pin-Lynch
4	92-1233	4	Pin-Clevis
5	92-1255-03	1	RH Side Panel ASM
6	92-5982	1	Front Panel ASM
6:1	93-6689	1	Decal-No Riders
7	3234-7	21	Screw-HHF
8	92-1320-03	2	Angle-Side
9	104-8300	23	Nut-Flange, NI
11	32148-7	4	Insert-Nut
12	106-2423-03	1	RH Spacer Bracket ASM
14	3296-44	14	Nut-Lock, NI
15	3296-42	4	Nut-Lock, NI
16	106-2422-03	1	LH Spacer Bracket ASM
17	3250-45	4	Screw-SPH
18	93-9719	2	Block-Wear
19	323-42	8	Screw-HH
20	93-9899	2	Decal-Warning
22	92-1248-03	1	LH Side Panel ASM
23	93-9720-03	2	Bracket-Pivot, Long (LH)
24	3230-1	2	Bolt-CARR
25	93-9868	2	Decal-Caution
26	92-1265-03	2	Bracket-Pivot

Ref	Part No.	Qty.	Description
27	3234-29	6	Screw-HHF
28	32128-20	4	Nut-HF
29	99-1123	2	Latch ASM
29:1	92-1271	1	Pivot-Latch
29:2	99-1113	1	Handle-Latch
29:3	99-1112	1	Plate-Retainer
29:4	32121-78	1	Pin-Roll
29:5	32121-25	1	Pin-Roll
30	3231-24	6	Screw-CARR
32	3256-57	4	Washer-Flat
33	93-9595	2	Lanyard
34	3230-15	4	Screw-CARR
35	93-9575	2	Tube-Pivot, Flatbed
36	93-9721-03	2	Bracket-Pivot, Long (RH)
37	105-4222	3	Decal
38	92-1259-03	1	Tailgate-Rear

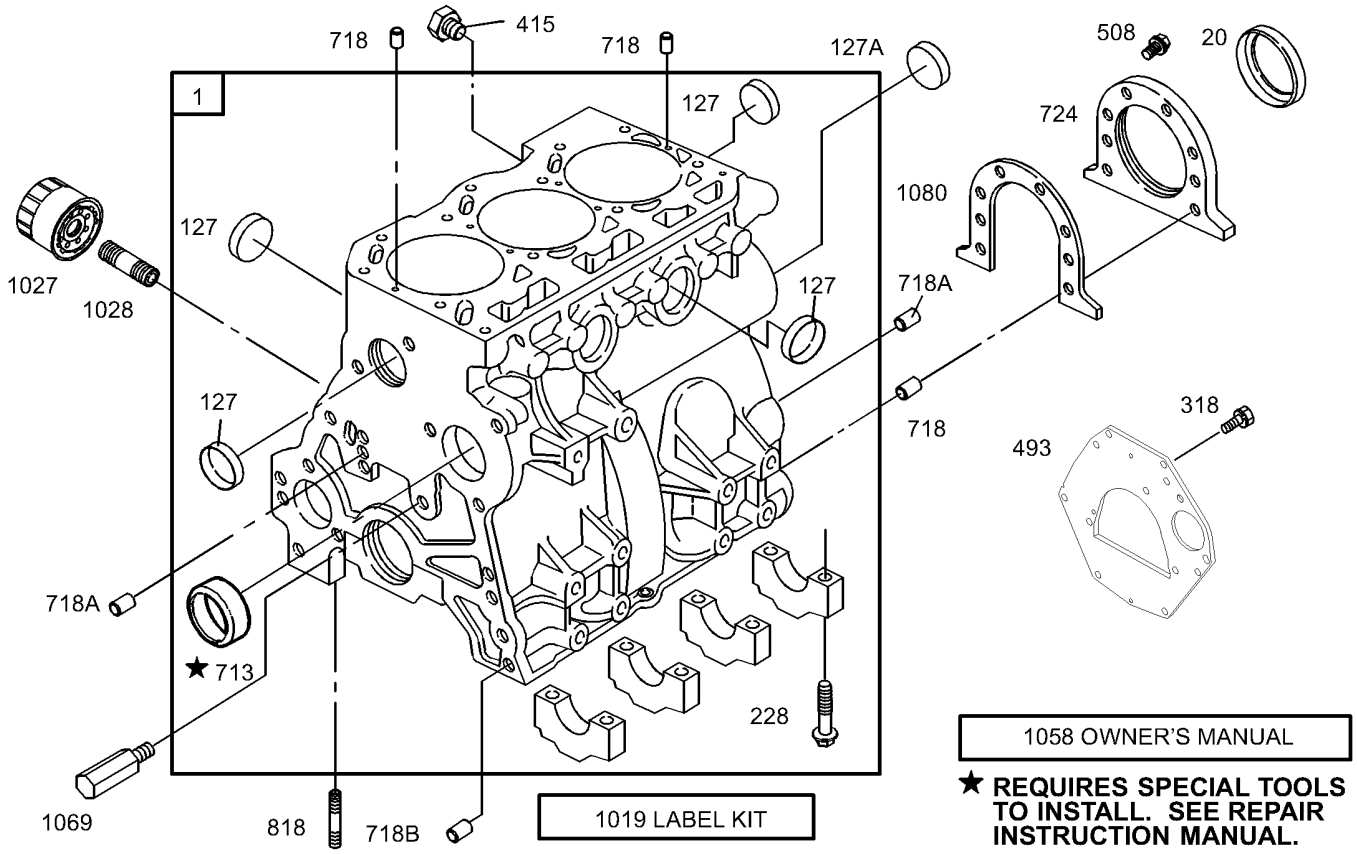

Assemblies include all parts shown in frames.

Cylinder Assembly

Ref	Part No.	Qty.	Description
1	112-2982	1	Cylinder ASM
20	99-9003	1	Seal-Oil
127	99-9008	1	Plug-Welch
228	99-9006	1	Screw-Hex
318	99-9005	1	Screw-Hex
415	99-9010	1	Plug-Welch
493	104-9232	1	Plate-End, Rear
508	99-9004	1	Screw-Hex
713	99-9002	1	Bushing
718	99-9012	1	Pin-Locating
724	99-9022	1	Retainer-Seal
818	99-9007	1	Stud-Metric
1019	110-2595	1	Label Kit
1027	108-3842	1	Filter-Oil
1028	105-9337	1	Adapter-Filter, Oil
1058	99-9019	1	Manual-Owners, Engine
1069	99-9020	1	Nozzle-Oil
1080	99-9021	1	Gasket-Retainer
127A	107-9892	1	Plug-Welch (Cam)
718A	99-9013	1	Pin-Locating
718B	99-9014	1	Pin-Locating

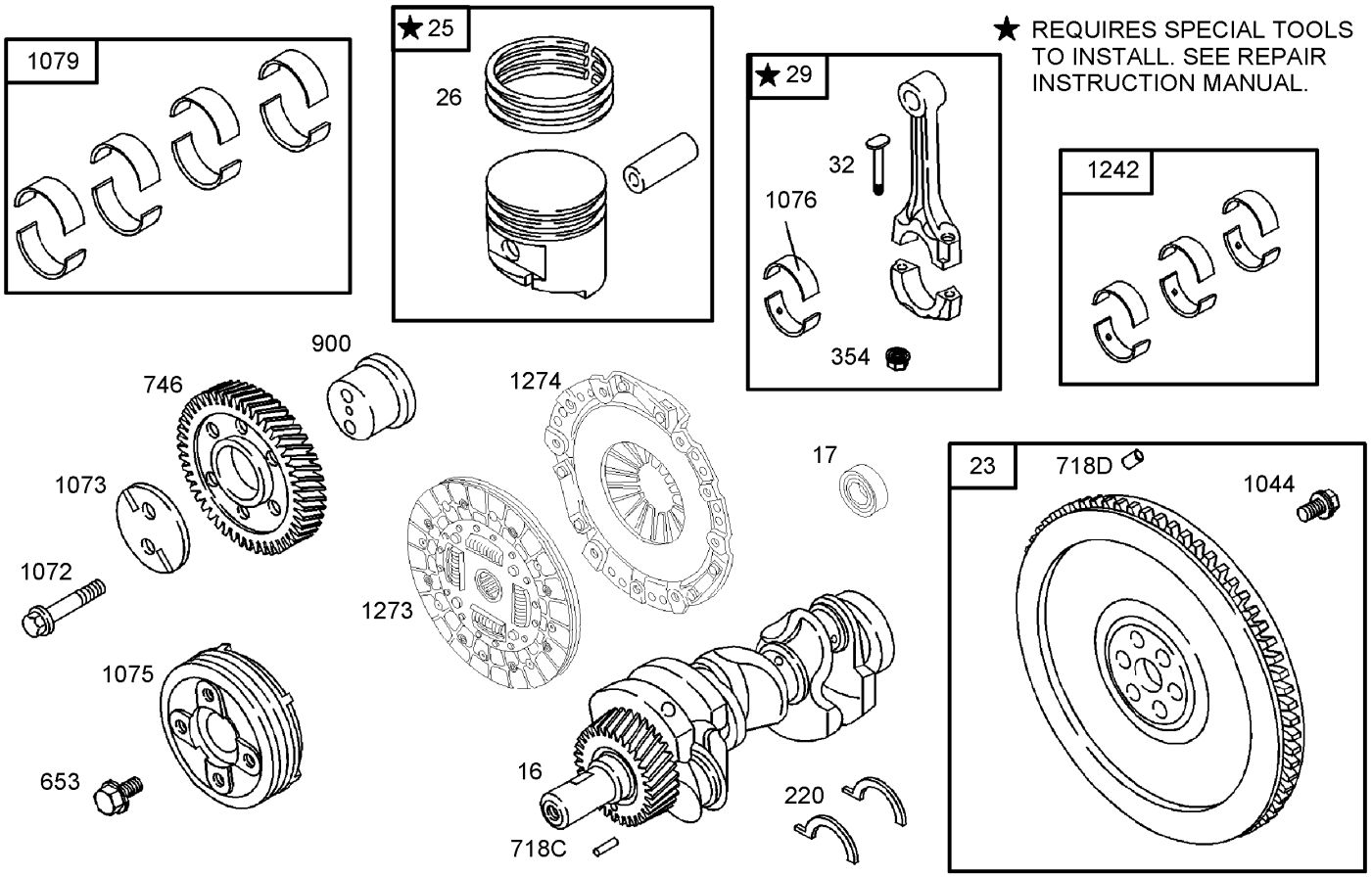

Assemblies include all parts shown in frames.

Crankshaft Assembly

Ref	Part No.	Qty.	Description
16	105-9339	1	Crankshaft
17	105-9324	1	Bearing-Ball, Radial
23	105-9323	1	Flywheel ASM
25	99-9025	1	Piston ASM (Standard)
25	99-9026	1	Piston ASM (.010 Over)
26	99-9027	1	Ring Set (Standard)
26	99-9028	1	Ring Set (.010 Over)
29	99-9029	1	Rod-Connecting
32	99-9030	1	Screw-Rod, Connecting
220	99-9035	1	Washer-Thrust
220	99-9036	1	Washer-Thrust (.005 In Oversized)
354	99-9034	1	Nut-Hex
653	107-9897	1	Screw-Hex
746	99-9609	1	Gear-Drive
900	99-9039	1	Shaft-Gear
1044	99-9031	1	Screw-Hex
1072	99-9032	1	Screw-Hex
1073	99-9040	1	Plate-Gear, Idler
1075	99-9041	1	Pulley-Crankshaft
1076	99-9042	1	Bearing-Rod
1079	99-9045	1	Set-Bearing, Main (Set Of 8)
1079	99-9046	1	Set-Bearing, Main (.010 Undersized)

Ref	Part No.	Qty.	Description
1242	99-9043	1	Set-Bearing, Rod
1242	99-9044	1	Set-Bearing, Rod (.010 Undersized)
1273	104-9219	1	Disc-Clutch
1274	104-9231	1	Plate-Pressure, Clutch
718C	99-9037	1	Pin-Locating
718D	106-1852	1	Pin-Locating

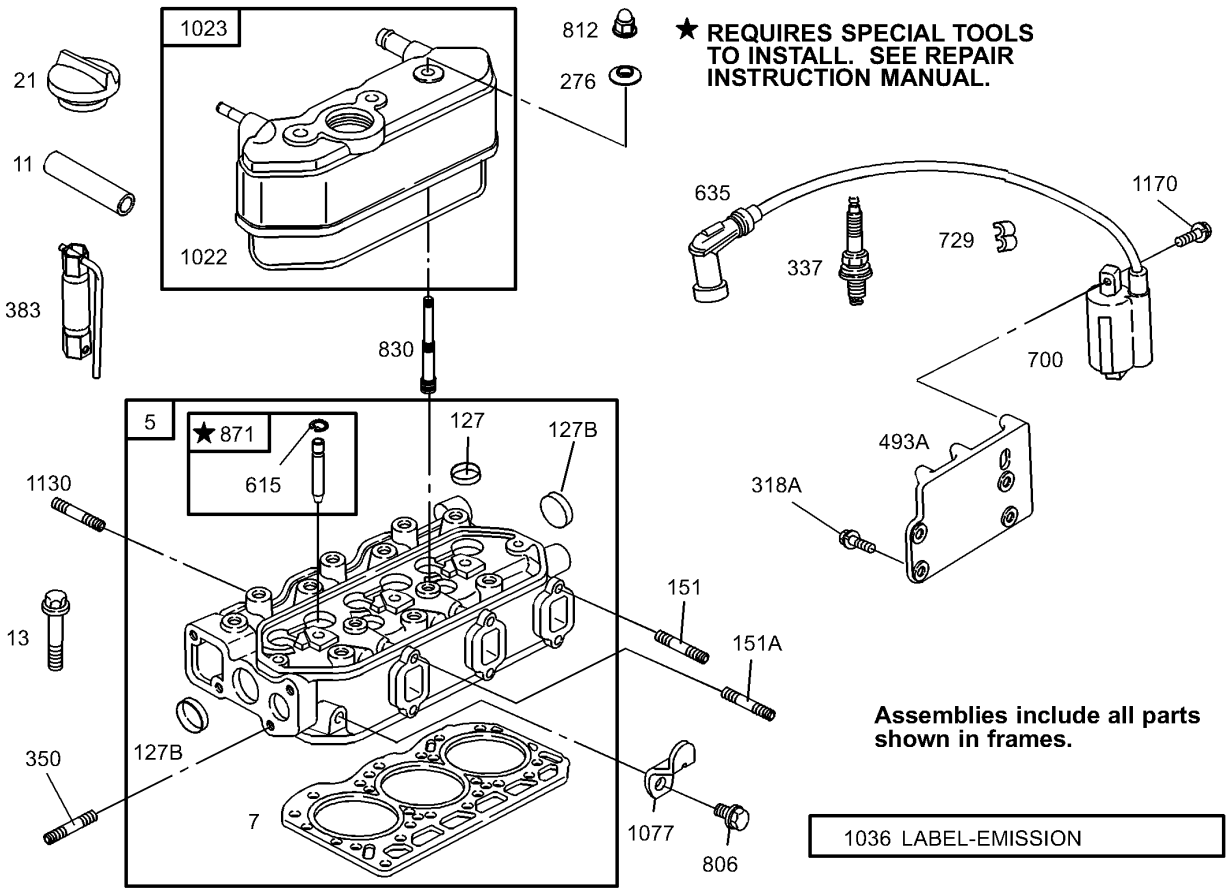

Cylinder Head Assembly

Ref	Part No.	Qty.	Description
5	106-1853	1	Head-Cylinder
7	99-9254	1	Gasket-Head, Cylinder
11	105-9322	1	Hose-Breather
13	99-9614	1	Screw-Metric
21	99-9052	1	Cap-Fill, Oil
127	99-9060	1	Plug-Welch
151	99-9058	1	Stud-Metric
276	99-9063	1	Washer-Seal
337	108-6945	1	Plug-Spark
350	99-9057	1	Stud-Metric
383	94-1664	1	Wrench-Spark Plug
615	99-9067	1	Retainer
635	99-9068	1	Boot-Plug, Spark
700	99-9069	1	Coil-Ignition
729	99-9066	1	Clip-Wire
806	99-9270	1	Screw-Hex
812	99-9061	1	Nut-Hex, Metric
830	99-9101	1	Stud-Arm, Rocker
871	99-9070	1	Bushing-Guide
1022	99-9073	1	Gasket-Cover, Rocker
1023	99-9074	1	Cover-Rocker
1036	99-9075	1	Emission Label Kit
1077	99-9076	1	Bracket-Lifting
1130	99-9055	1	Stud-Metric

Ref	Part No.	Qty.	Description
1170	99-9056	1	Screw-Hex
127B	99-9008	1	Plug-Welch
151A	99-9059	1	Stud-Metric
318A	99-9202	1	Screw-Hex
493A	99-9065	1	Bracket-Mounting

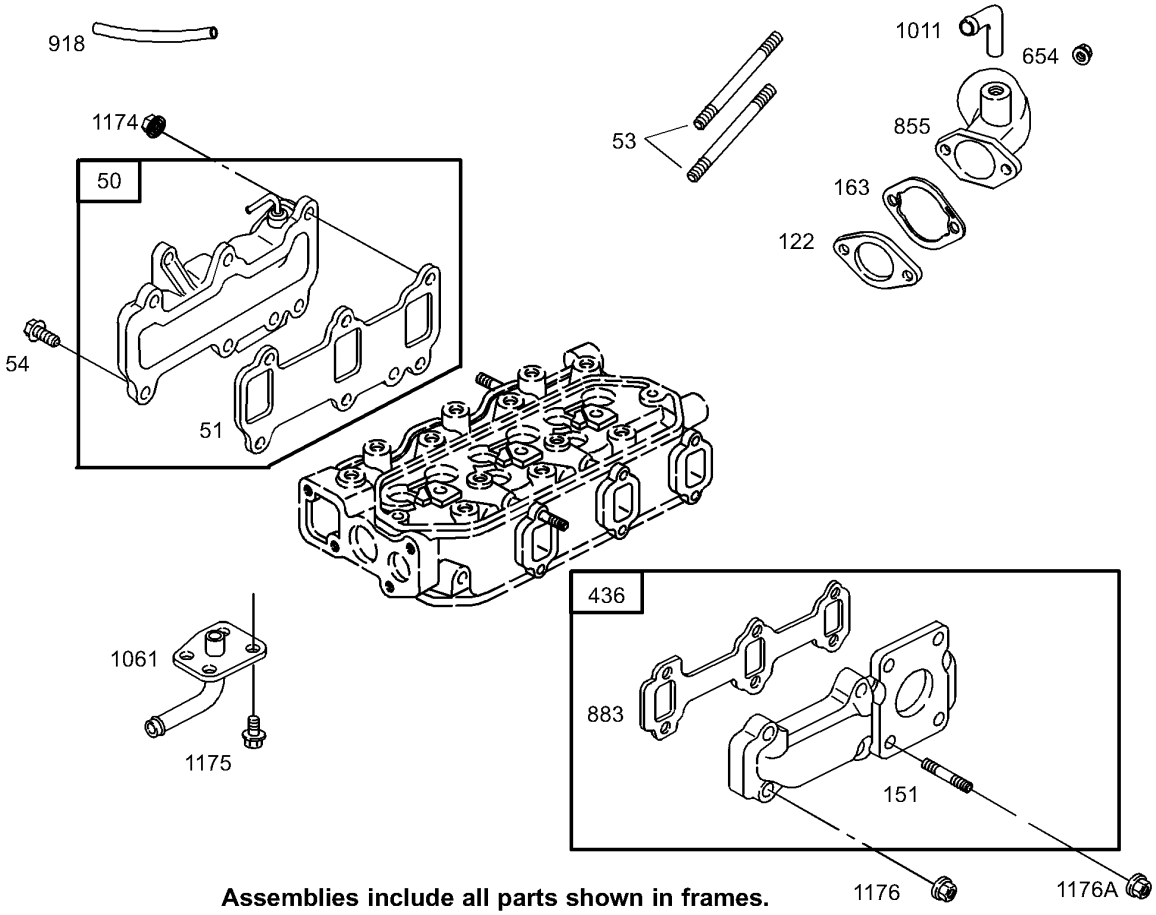

Assemblies include all parts shown in frames.

Manifold Assembly

Ref	Part No.	Qty.	Description
50	105-9325	1	Manifold-Intake
51	99-9173	1	Gasket-Intake
53	106-1854	1	Stud
54	99-9004	1	Screw-Hex
122	99-9184	1	Spacer-Carburator
151	99-9221	1	Stud-Standard
163	105-9329	1	Gasket-Funnel, Air
436	99-9177	1	Manifold-Exhaust
654	99-9186	1	Nut-Hex, Metric
855	105-9328	1	Funnel-Air
883	106-1855	1	Gasket-Exhaust
918	105-9330	1	Hose-Vacuum
1011	99-9198	1	Tube-Vent
1061	99-9180	1	Cover-Outlet
1174	99-9114	1	Nut-Hex, Metric
1175	99-9004	1	Screw-Hex
1176	99-9175	1	Nut-Hex, Metric
1176A	99-9176	1	Nut-Hex

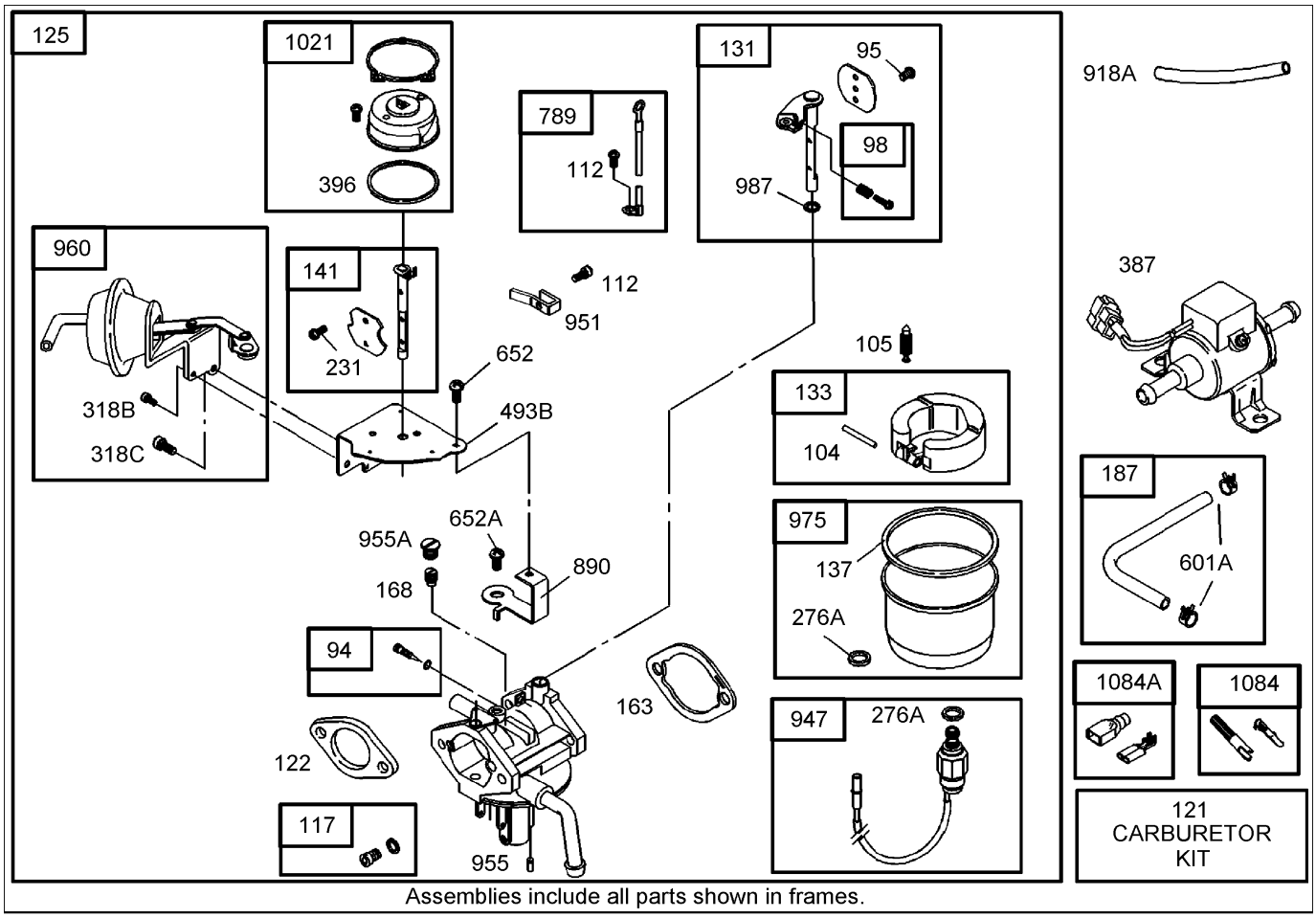

Assemblies include all parts shown in frames.

Carburetor Assembly

Ref	Part No.	Qty.	Description
94	106-1856	1	Idle Mixture Kit
95	106-1857	1	Screw
98	106-1858	1	Idle Speed Kit
104	106-1859	1	Pin-Hinge, Float
105	106-1860	1	Valve-Needle, Float
112	105-2063	2	Screw-Mtg., Valve
117	110-2564	1	Jet-Main
121	110-2565	1	Carburetor Kit
122	99-9184	1	Spacer-Carburator
125	110-2563	1	Carburetor Assembly
131	110-2566	1	Throttle Shaft Kit
133	106-1864	1	Float-Carburetor
137	106-1865	1	Gasket-Bowl, Float
141	106-1866	1	Choke Shaft Kit
163	105-9329	1	Gasket-Funnel, Air
168	106-1953	1	Jet-Circuit, Idle
187	99-9238	1	Line-Fuel
231	106-1857	1	Screw
387	99-9196	1	Pump-Fuel
396	106-1871	1	Gasket-Cover, Choke
652	106-1869	1	Screw
789	106-1875	1	Harness-Wiring
890	106-1876	1	Bracket-Support
947	110-2511	1	Solenoid-Valve

Ref	Part No.	Qty.	Description
951	106-1878	1	Lever-Choke
955	106-1879	1	Plug-Carburetor
960	106-1881	1	Break-Choke, Vacuum
975	106-1882	1	Bowl-Float
❷987		1	Seal-Shaft, Throttle
1021	106-1883	1	Activator-Choke
1084	99-9245	1	Connector
276A	106-1868	1	Washer-Sealing
318B	106-1869	1	Screw
318C	106-1870	1	Screw
493B	106-1872	1	Bracket-Mounting
601A	99-9242	1	Clamp-Hose
652A	106-1874	1	Screw
918A	105-9330	1	Hose-Vacuum
955A	106-1880	1	Plug-Carburetor
1084A	99-9098	1	Connector

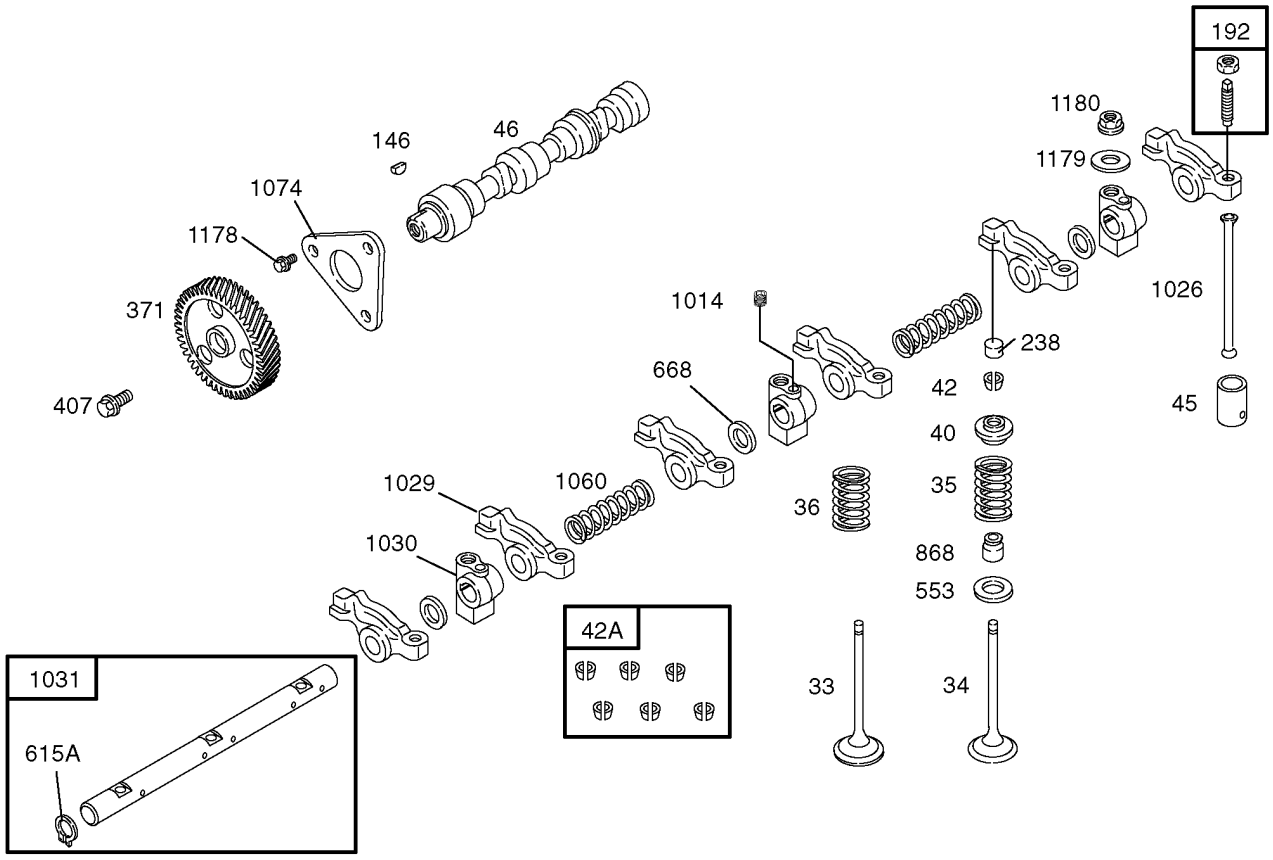

Assemblies include all parts shown in frames.

Cam Shaft Assembly

Ref	Part No.	Qty.	Description
33	99-9080	1	Valve-Exhaust
34	99-9081	1	Valve-Intake
35	99-9082	1	Spring-Valve
36	99-9082	1	Spring-Valve
40	99-9084	1	Retainer-Valve
42	99-9086	1	Keeper-Valve
45	99-9088	1	Tappet-Valve
46	99-9097	1	Shaft-Cam
146	99-9095	1	Key-Woodruff
192	99-9092	1	Adjuster-Arm, Rocker (Use Before Engine Serial #04090100)
192	112-2978	1	Adjuster-Arm, Rocker (Use Before Engine Serial #04083100)
238	99-9094	1	Cap-Valve (Use Before Engine Serial #04090100)
238	112-2979	1	Cap-Valve (Use Before Engine Serial #04083100)
371	99-9641	1	Gear-Cam
407	99-9085	1	Screw-Metric
42A	99-9087	1	Keeper-Valve (Set Of 6)
553	99-9096	1	Seat-Spring, Valve
668	99-9093	1	Washer-Spacer
868	99-9102	1	Seal-Valve
1014	99-9090	1	Screw-Metric

Ref	Part No.	Qty.	Description
1026	99-9103	1	Rod-Push (Use Before Engine Serial #04090100)
1026	112-2980	1	Rod-Push (Use Before Engine Serial #04083100)
1029	99-9104	1	Arm-Rocker
1030	99-9107	1	Support-Arm, Rocker
1031	99-9106	1	Shaft-Arm, Rocker
1060	99-9108	1	Spring-Shaft, Rocker
1074	99-9109	1	Retainer-Camshaft
1178	99-9083	1	Screw-Hex
1179	99-9079	1	Washer-Flat
1180	99-9091	1	Nut-Hex, Metric
615A	99-9099	1	Retainer

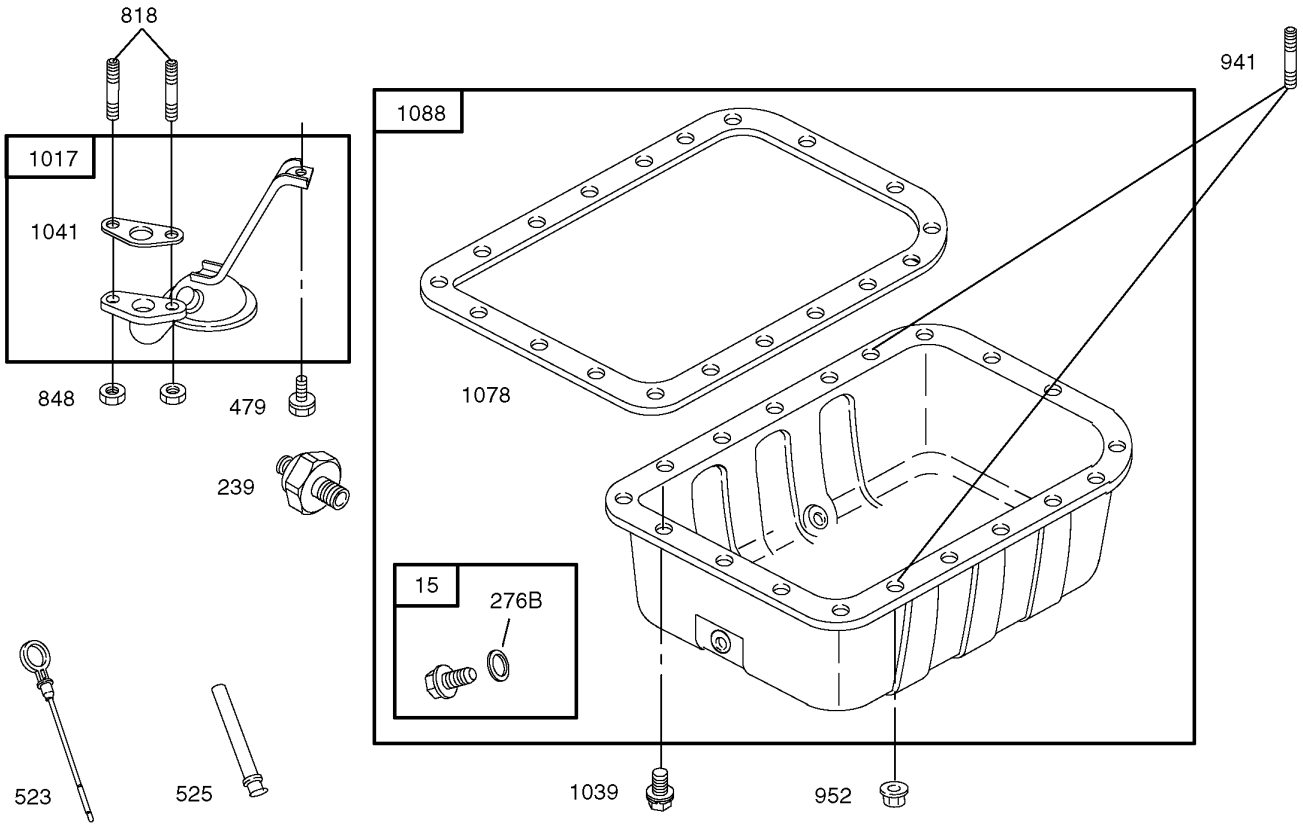

Assemblies include all parts shown in frames.

Oil Pan Assembly

Ref	Part No.	Qty.	Description
239	107-9908	1	Switch-Pressure, Oil
15	99-9247	1	Plug-Drain, Oil
479	99-9111	1	Screw-Hex
523	110-2597	1	Dipstick
525	99-9118	1	Tube-Dipstick
818	99-9007	1	Stud-Metric
848	99-9114	1	Nut-Hex, Metric
941	99-9112	1	Stud-Metric
952	99-9113	1	Nut-Hex, Metric
1017	99-9116	1	Screen-Pump, Oil
1039	99-9111	1	Screw-Hex
1041	99-9120	1	Gasket-Strainer, Oil
1078	99-9121	1	Gasket-Pan, Oil
1088	99-9241	1	Pan-Oil
276B	99-9249	1	Washer-Seal

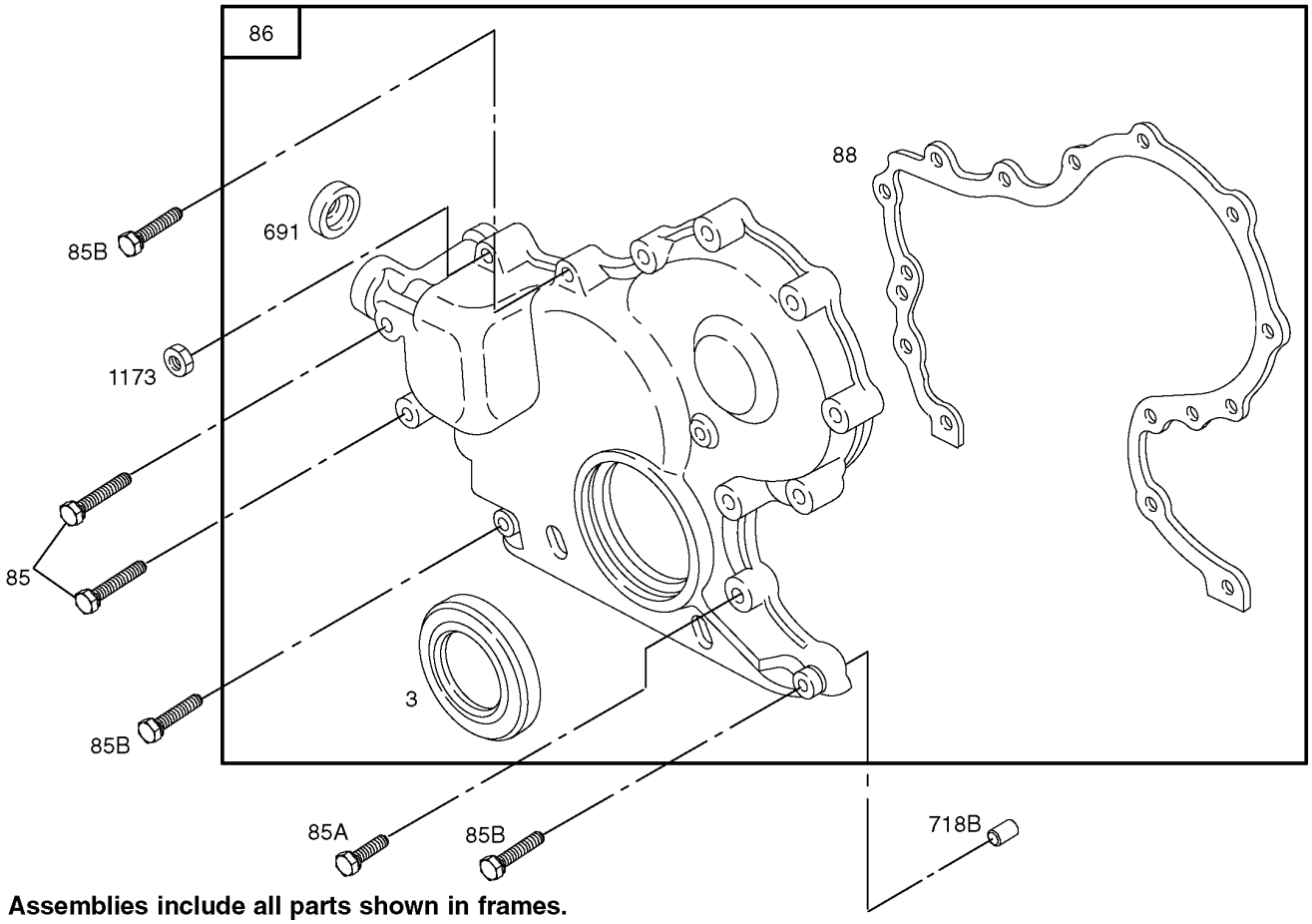

Assemblies include all parts shown in frames.

Gear Cover Assembly

Ref	Part No.	Qty.	Description
3	107-9900	1	Seal-Oil
85	99-9127	1	Screw-Hex
86	99-9130	1	Gear Cover ASM
88	99-9132	1	Gasket-Cover
691	99-9131	1	Seal-Shaft, Governor
85A	99-9128	1	Screw-Hex
85B	99-9129	1	Screw-Hex
1173	99-9114	1	Nut-Hex, Metric
718B	99-9014	1	Pin-Locating

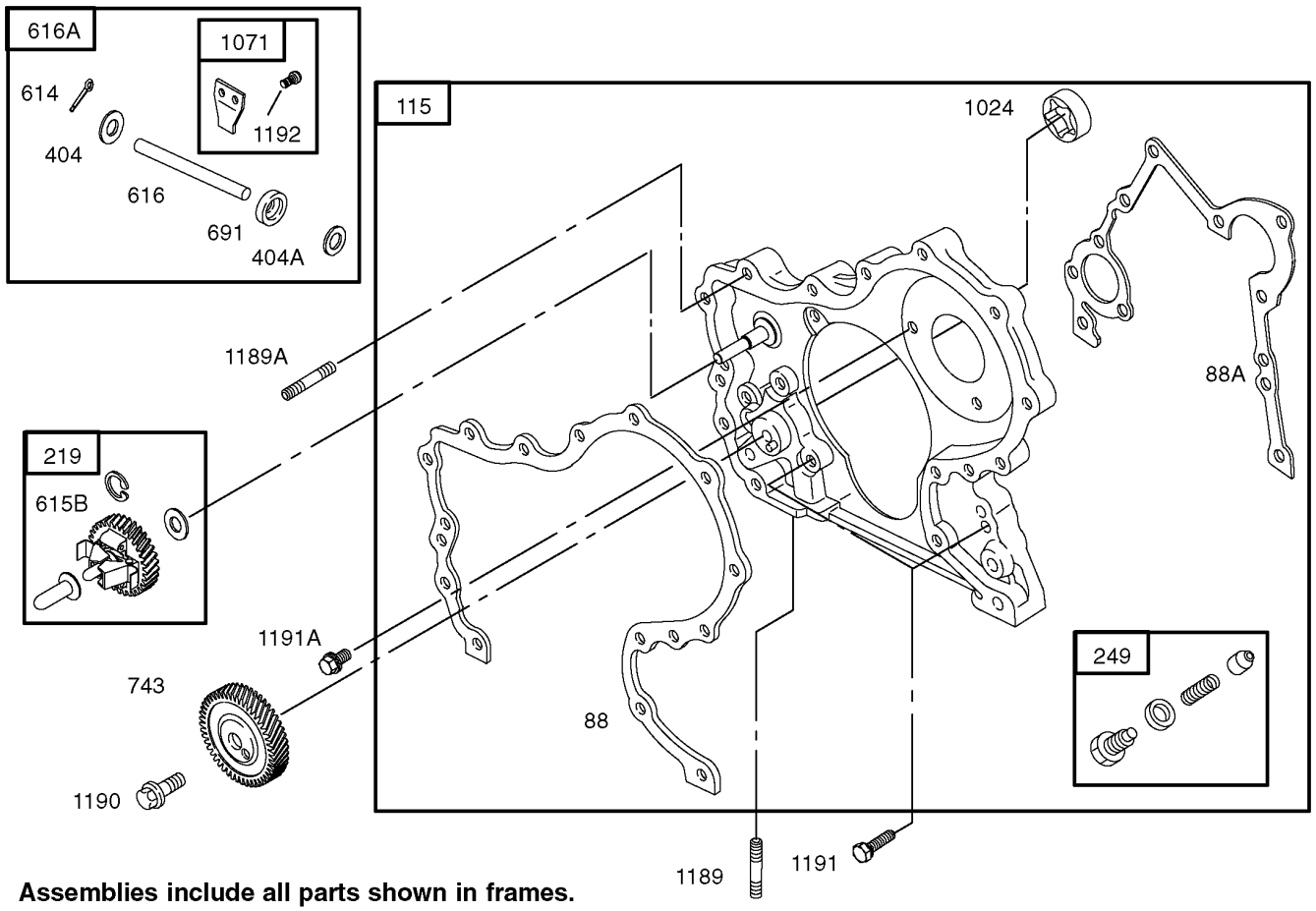

Assemblies include all parts shown in frames.

Gear Housing Assembly

Ref	Part No.	Qty.	Description
❷1024		1	Pump-Oil
1071	99-9149	1	Paddle-Governor
115	99-9138	1	Housing-Gear
1189	99-9007	1	Stud-Metric
1189A	99-9137	1	Stud-Metric
1190	99-9135	1	Screw-Hex
1191	99-9133	1	Screw-Hex
1191A	99-9134	1	Screw-Hex
1192	99-9143	1	Screw-Hex, Torx
219	99-9261	1	Gear-Governor
249	99-9142	1	Valve-Relief, Oil
404	99-9140	1	Washer-Spacer
404A	99-9141	1	Washer-Spacer
614	99-9053	1	Pin-Cotter
615B	99-9145	1	Retainer
616	99-9146	1	Crank-Governor
616A	99-9147	1	Crank-Governor
691	99-9131	1	Seal-Shaft, Governor
743	99-9656	1	Gear-Drive
88	99-9132	1	Gasket-Cover
88A	99-9136	1	Gasket-Cover, Gear

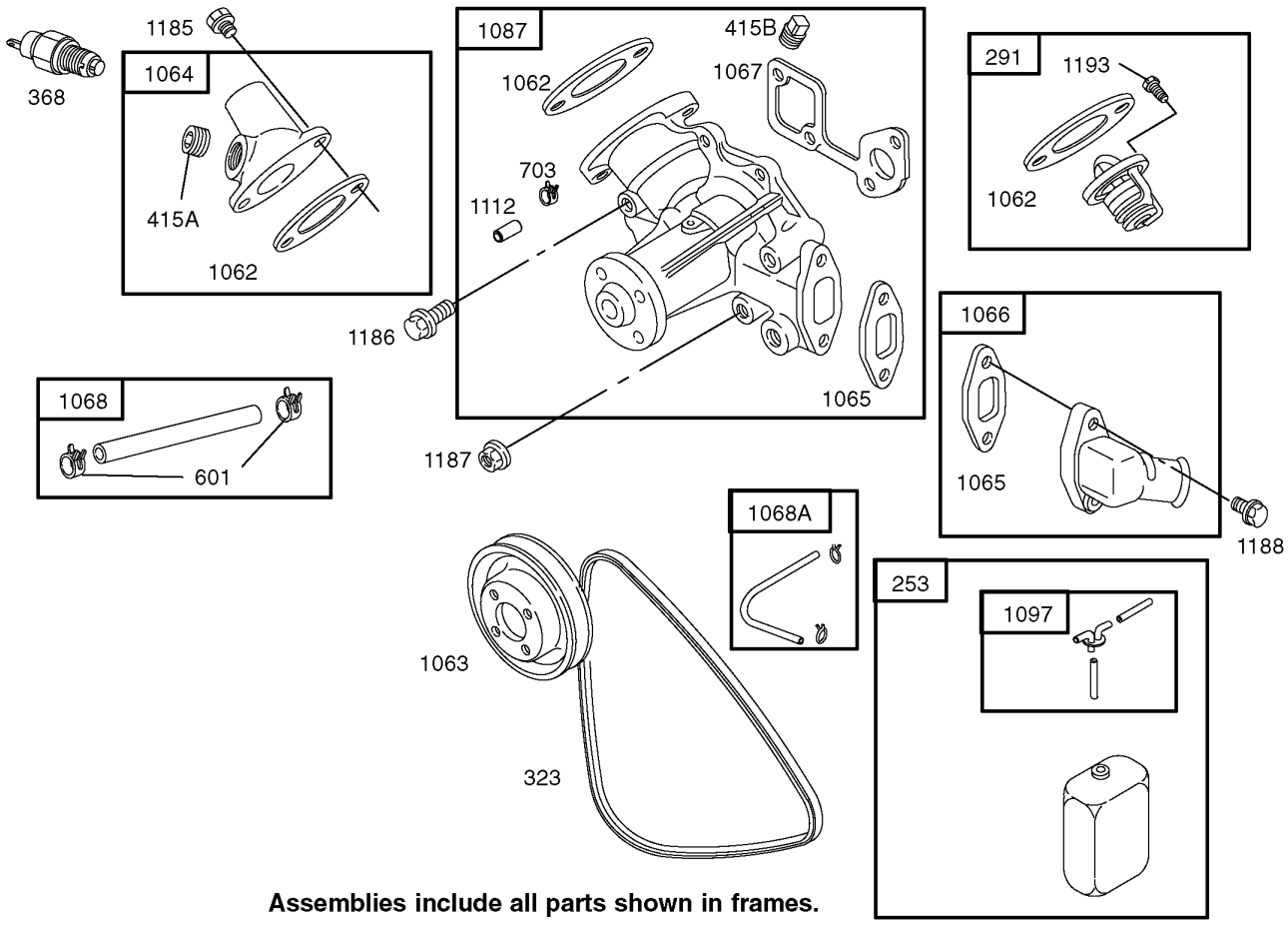

Assemblies include all parts shown in frames.

Water Pump Assembly

Ref	Part No.	Qty.	Description
1062	99-9163	1	Gasket-Outlet
1063	99-9164	1	Pulley-Pump
1064	99-9165	1	Housing-Outlet
1065	99-9166	1	Gasket-Housing, Inlet
1066	99-9167	1	Housing-Inlet
1067	99-9168	1	Gasket-Pump, Water
1068	106-1886	1	Hose / Clamp ASM
1068A	99-9072	1	Hose-Tank, Reserve
1087	106-1887	1	Pump-Water
1097	99-9071	1	Hose-Tank, Reserve
1112	106-1888	1	Tube-Vent
1185	99-9004	1	Screw-Hex
1186	99-9151	1	Screw-Hex
1187	99-9153	1	Nut-Hex, Metric
1188	99-9004	1	Screw-Hex
1193	99-9152	1	Screw-Metric
253	106-1884	1	Tank-Reserve
291	99-9155	1	Thermostat
323	99-9156	1	Belt-V
368	99-9157	1	Switch-Temperature, Water
415A	99-9158	1	Plug
415B	99-9159	1	Plug
601	99-9160	1	Clamp-Hose
703	106-1885	1	Clip

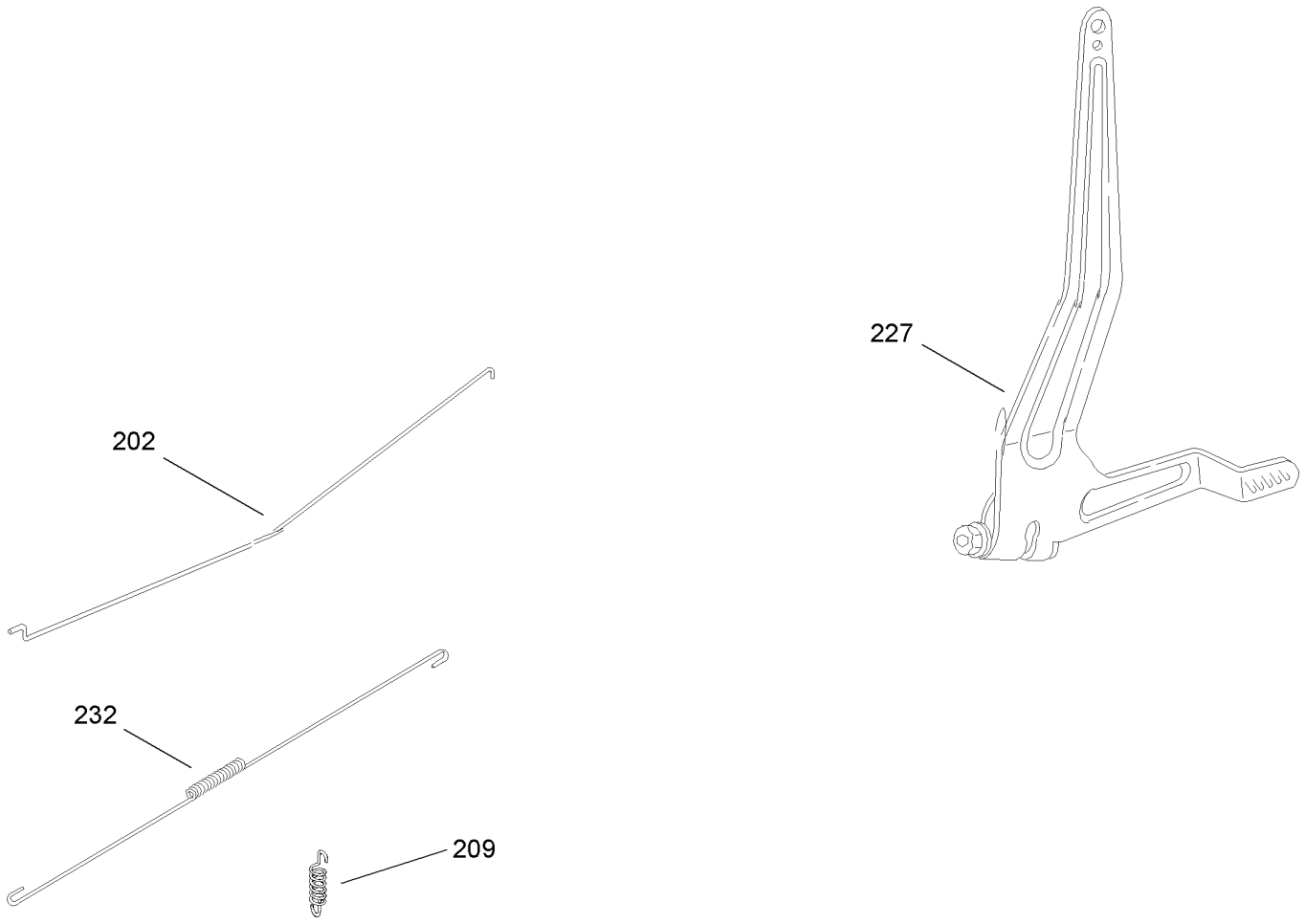

Governor Assembly

Ref	Part No.	Qty.	Description
202	99-9187	1	Link-Governor, Mech.
209	106-1889	1	Spring-Governor
227	99-9191	1	Lever-Governor
232	99-9192	1	Spring-Link

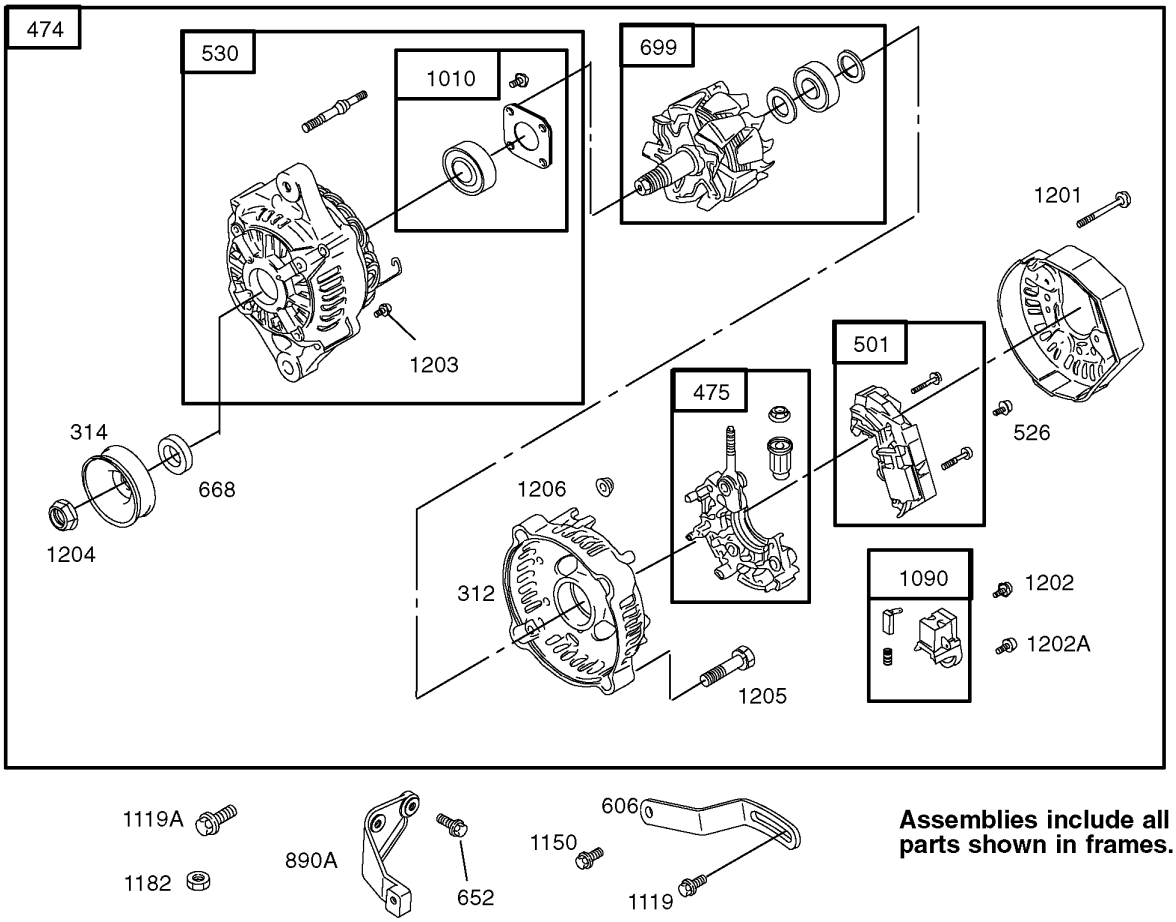

Alternator Assembly

Ref	Part No.	Qty.	Description
1010	106-1898	1	Retainer-Bearing
1090	106-1899	1	Retainer-Brush
1119	99-9663	1	Screw-Hex, Metric
1119A	99-9205	1	Screw-Hex, Metric
1150	99-9202	1	Screw-Hex
1182	99-9114	1	Nut-Hex, Metric
1201	106-1950	1	Screw
1202	106-1951	1	Screw
1202A	106-1894	1	Screw
1203	106-1894	1	Screw
1204	106-1954	1	Nut
1205	106-1955	1	Screw
1206	106-1956	1	Nut
312	106-1890	1	Housing-End, Brush
314	106-1891	1	Pulley-Alternator
474	99-9209	1	Alternator
475	106-1892	1	Rectifier
501	106-1893	1	Regulator
526	106-1894	1	Screw
530	106-1895	1	Housing-End, Drive
606	106-1952	1	Strap-Adjusting
652	99-9202	1	Screw-Hex
668	106-1896	1	Spacer
699	106-1897	1	Rotor

Ref	Part No.	Qty.	Description
890A	99-9211	1	Bracket-Support

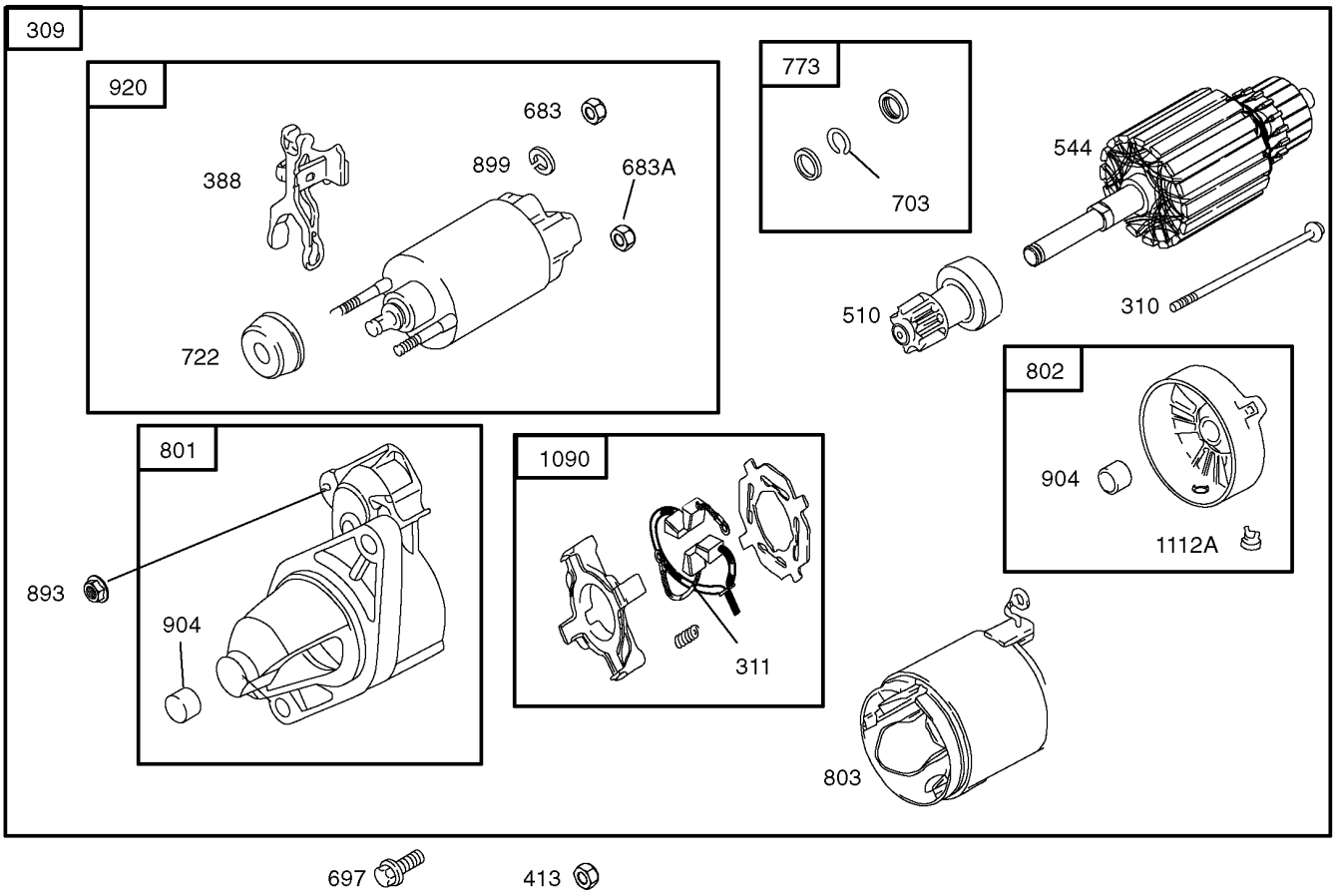

Assemblies include all parts shown in frames.

Starter Motor Assembly

Ref	Part No.	Qty.	Description
1090	106-1974	1	Retainer-Brush
1112A	106-1975	1	Plug-Vent
309	100-9837	1	Motor-Starter
310	106-1957	1	Bolt
311	106-1958	1	Brush Set
388	106-1959	1	Lever-Drive, Pinion
413	99-9206	1	Nut-Hex, Metric
510	106-1960	1	Drive-Starter
544	106-1961	1	Armature-Starter
683	106-1962	1	Nut
683A	106-1963	1	Nut
697	99-9201	1	Screw-Hex
703	106-1964	1	Clip
722	106-1965	1	Seal-Plunger
773	106-1966	1	Retainer
801	106-1967	1	Cap-Drive
802	106-1968	1	Cap-End
803	106-1969	1	Housing-Starter
893	106-1970	1	Nut
899	106-1971	1	Washer
904	106-1972	1	Bearing-Needle
920	106-1973	1	Solenoid-Starter

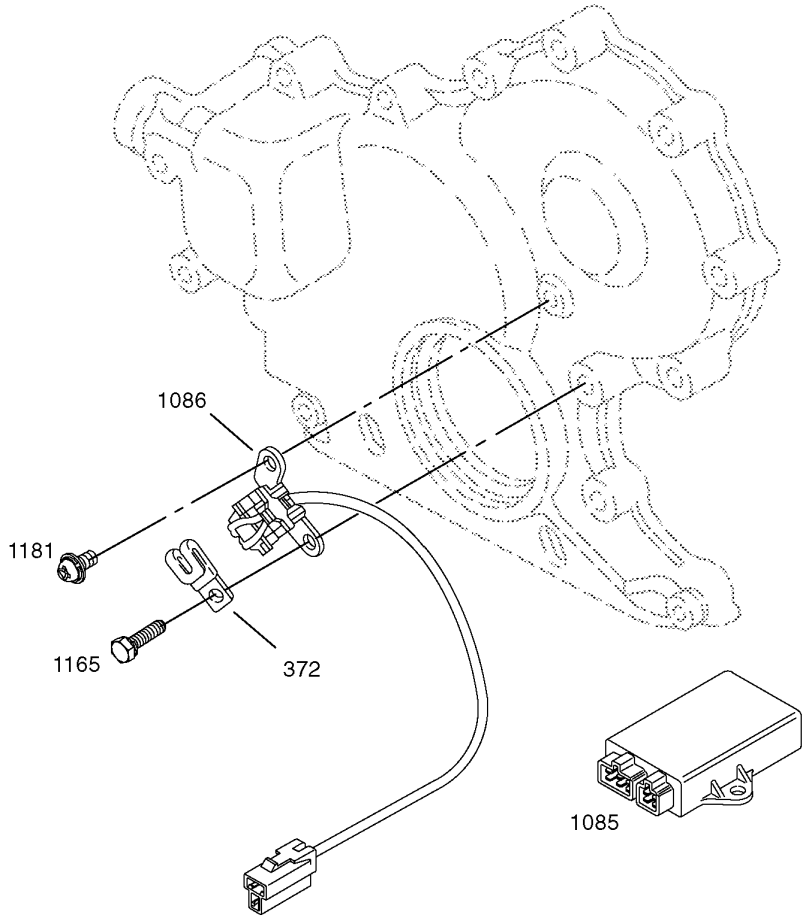

Ignition Assembly

Ref	Part No.	Qty.	Description
1085	105-1768	1	Ecm
1086	99-9217	1	Trigger-Ignition
1165	99-9128	1	Screw-Hex
1181	99-9210	1	Screw-Phillips
372	99-9208	1	Clamp

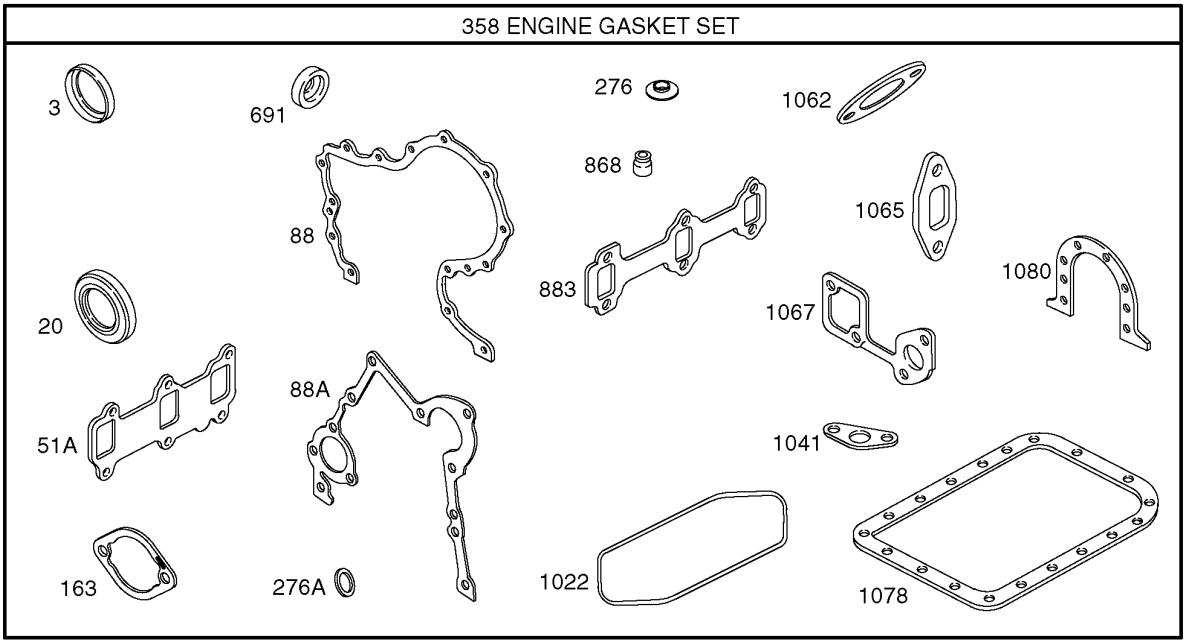

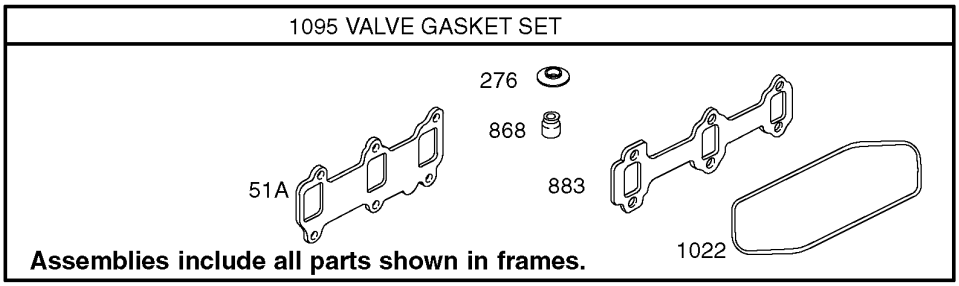

Gasket Assembly

Ref	Part No.	Qty.	Description
3	107-9900	1	Seal-Oil
20	99-9003	1	Seal-Oil
88	99-9132	1	Gasket-Cover
163	105-9329	1	Gasket-Funnel, Air
276	99-9063	1	Washer-Seal
358	106-1976	1	Engine Gasket Set
51A	99-9173	1	Gasket-Intake
691	99-9131	1	Seal-Shaft, Governor
868	99-9102	1	Seal-Valve
883	106-1855	1	Gasket-Exhaust
88A	99-9136	1	Gasket-Cover, Gear
1022	99-9073	1	Gasket-Cover, Rocker
1041	99-9120	1	Gasket-Strainer, Oil
1062	99-9163	1	Gasket-Outlet
1065	99-9166	1	Gasket-Housing, Inlet
1067	99-9168	1	Gasket-Pump, Water
1078	99-9121	1	Gasket-Pan, Oil
1080	99-9021	1	Gasket-Retainer
1095	106-1977	1	Valve Gasket Set
276A	99-9249	1	Washer-Seal

Attachments and Accessories

For 07365 - Workman 4200 with Bed

Product Name	Model/Part
High-Flow Hydraulic Kit	07228
Full Area Flatbed Side Kit	07302
Fold Down Side Kit	07303
Cab Kit with Doors	07319
2/3 Area Flatbed	07321
2/3 Area Flatbed Side Kit	07322
Heater Kit	07330
Bed Liner	07331
1/3 Area Flatbed	07341
1/3 Area Stake Side Kit	07342
1/3 Area Platform Lift	07344
Rear PTO Kit	07419
Hand Throttle Kit	07420
Spiker	08856
Finish Grader	08867
Gas and Diesel Engine Cover Kit	105-7996
Tachometer Kit (RPM and MPH)	105-9498
Jet-High Altitude (2400-6600 FT)	106-6720
Jet-High Altitude (6000-10000 FT)	106-6721
Tachometer Kit (RPM Only)	107-7975
Signal Light Kit	107-7985
Accessory Wire Harness Kit	107-7987
Work Light Kit	107-7988
High Air Intake Kit	107-8003
Remote Hydraulics Float Kit	107-8004
Backup Alarm Kit	107-8037
Side Mirror Kit	107-8048
Arrestor-Spark	108-3108
Single Nozzle Kit	41024
Hose Reel Kit	41097
Spray Gun Kit	41133
Pro Foam Concentrate (4 X 1 Gallon)	41157
Foam Marker Kit	41228
Spray System	41229
Spreader Base Unit	41253
Vicon Spreader	41256
Enclosed Boom	41355
Enclosed Walking Boom	41358
Enclosed Walking Boom Trailer	41359
Enclosed Boom Mount	41363
Power Holster Hitch Kit	44209
Drawbar Kit	44212
Hitch Frame and Draw Bar Kit	44213
Topdresser 1800	44225
Fifth Wheel Hitch Kit	44230
Core Harvester Adapter Kit	44242
Rear Tire And Wheel ASM	87-5370
24 Inch Rear Fender Kit	87-5430
Tire-Rear	87-6740
1/3 Area Tool Box Mounting Kit	92-1219
Automatic Tailgate Release Kit	92-1220
Block-Fuse	92-2641

Attachments and Accessories (continued)

For 07365 - Workman 4200 with Bed

Product Name	Model/Part
PTO Over Running Clutch Kit	92-2655
Topdresser 1800 Lift Kit	92-4452
Mid-Mount Kit for Platform Lift	93-3741
1/3 Area Cover Kit	93-9225
Rear 1/3 Area Mounting Kit	93-9249
Tire-Front, Service	94-3809
Tire-Front	94-5261
Rear Wheel ASM	98-2978
Wheel And Tire Kit	98-2992
Tire-Rear	98-2993
Tire-Rear, Industrial	99-1091
Rear Tire ASM	99-1093


TORO®