Form Number 3353-991 Rev B

Commercial Walk-Behind Mower

Fixed Deck, Pistol Grip, Gear Drive with 36in TURBO FORCE® Cutting Unit

Model No. 30684 - 260000001 and up.

Parts Catalog

Ordering Replacement Parts

To order replacement parts, please supply the part number, the quantity, and the description of each part desired.

Understanding Reference Numbers

Each Identified part in an illustration has a reference number. The reference number for a part also appears in the parts list, along with other information about the part.

This catalog uses two special reference number formats, one to indicate parts in a service assembly and another to indicate the quantity of a given part in an illustration.

Service Assembly Reference Numbers

Parts in service assemblies have reference numbers in the form a:b. The a represents the reference number of the entire service assembly and the b represents a sequential number unique to each part within the service assembly.

For example, a wheel assembly might be identified by reference number 6, the tire by 6:1, the valve by 6:2, and the wheel by 6:3. When you order the assembly identified by reference number 6, you receive all parts identified by reference numbers 6:1, 6:2, and 6:3. However, you may also order any part individually. Reference numbers of this type appear in illustrations and in part lists.

Reference Numbers Indicating Quantity

In an illustration, if a reference number indicates more than one part, the reference number has the form nX y. The n represents the quantity of the part, the X is the multiplication symbol, and the y represents the reference number.

For example, in an illustration, the reference number 2X 37 means that two of the parts identified by reference number 37 are indicated.

Register your product at www.Toro.com

© The Toro Company - 2006
All Rights Reserved

Contents

Description	Page
Engine and Fuel Tank Assembly	3
Transmission Drive Assembly	4
Wheel Drive and Brake Assembly	6
Handle and Control Assembly	7
Control Panel Decal Assembly No. 110-6906	9
Deck Assembly	10
Deck Decal Assembly No. 110-4907	11
Deflector Assembly No. 110-0790	12
Sheave, Spindle and Blade Assembly	13
Idler Assembley	14
Caster Assembly	15
Cylinder and Crankcase Assembly Kawasaki Model FH430V-AS25	16
Piston and Crankshaft Assembly Kawasaki Model FH430V-AS25	17
Valve and Camshaft Assembly Kawasaki Model FH430V-AS25	18
Lubrication Equipment Assembly Kawasaki Model FH430V-AS25	19
Cooling Equipment Assembly Kawasaki Model FH430V-AS25	20
Electric Equipment Assembly Kawasaki Model FH430V-AS25	21
Control Equipment Assembly Kawasaki Model FH430V-AS25	22
Carburetor Assembly Kawasaki Model FH430V-AS25	23
Air Filter and Muffler Assembly Kawasaki Model FH430V-AS25	24
Fuel Tank and Fuel Valve Assembly Kawasaki Model FH430V-AS25	25
Starter Assembly Kawasaki Model FH430V-AS25	26
Label Assembly Kawasaki Model FH430V-AS25	27
Attachments and Accessories List	28

Part Description Abbreviations

Part descriptions in this catalog may include the following abbreviations.

AR. . . . . as required
ASM. . . . . assembly
BBC. . . . . blade brake clutch
CARR. . . . . carriage
DEG. . . . . degrees
EXT. . . . . external
FH. . . . . flat head
GA. . . . . gauge
HF. . . . . hex flange
HH. . . . . hex head
HHF. . . . . hex head flange
HHFTF. . . . . hex head flange thread forming
HJ. . . . . hex jam
HLH. . . . . hex lag head
HOC. . . . . height-of-cut
HSBH. . . . . hex socket button head
HSFH. . . . . hex socket flat head
HSH. . . . . hex socket head
HWH. . . . . hex washer head
HWHTF. . . . . hex washer head thread forming
HYD. . . . . hydraulic
INC. . . . . incorporated
LH. . . . . left hand
NI. . . . . nylon insert
NPTF. . . . . national pipe thread fine
PFH. . . . . phillips flat head
PPH. . . . . phillips pan head
PPHTF. . . . . phillips pan head thread forming
PRH. . . . . phillips round head
PTH. . . . . phillips truss head
PTO. . . . . power-take-off
RH. . . . . right hand
ROPS. . . . . roll-over-protection-system
SFH. . . . . slotted fillister head
SHH. . . . . slotted hex head
SHWH. . . . . slotted hex washer head
SPH. . . . . slotted pan head
SQH. . . . . square head
SRH. . . . . slotted round head
STD. . . . . standard
TAP. . . . . self tapping
TTH. . . . . torx truss head

Footnotes

❶ Not illustrated
❷ Not serviced separately
❸ Obtain from your local Kawasaki dealer

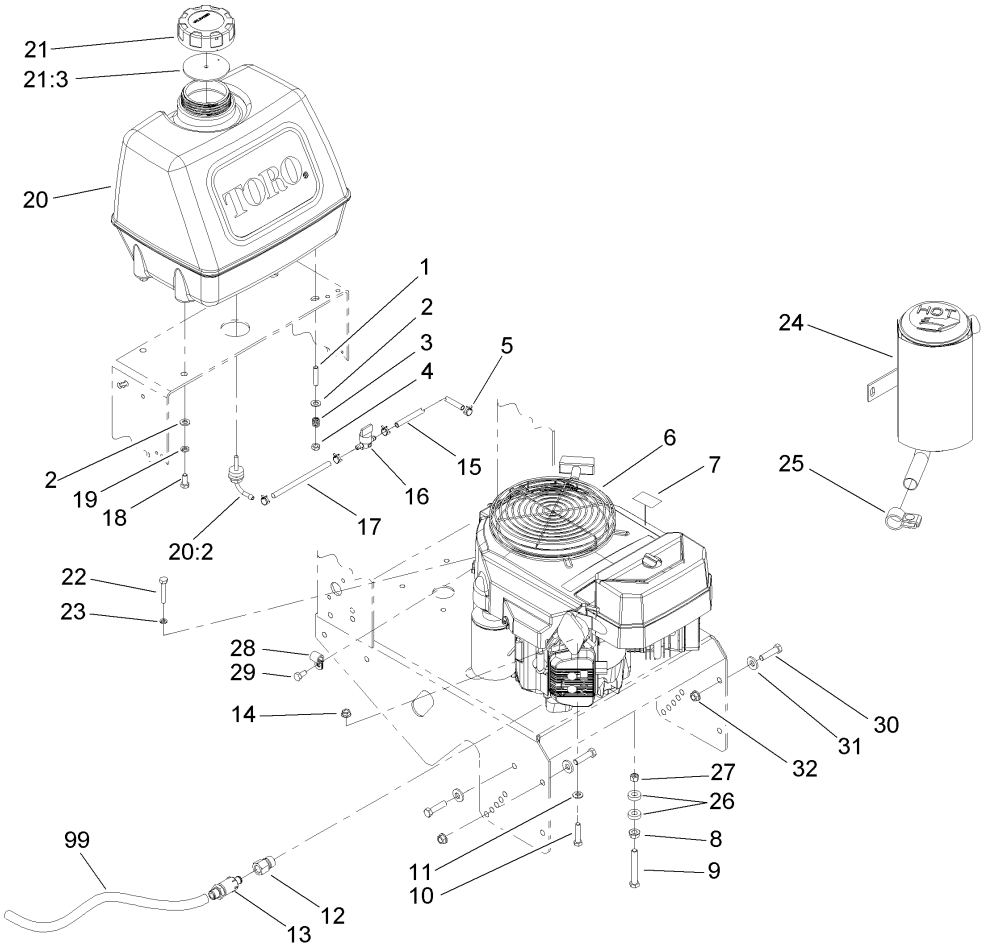

Engine and Fuel Tank Assembly

Ref	Part No.	Qty.	Description
1	1-633023	2	Stud
2	3256-23	4	Washer-Flat
3	1-633349	2	Spring-Tank, Fuel
4	3296-47	2	Nut-Lock, NI
5	1-303077	4	Clamp
❷❸6		1	Engine-Kawasaki, FH430V-As25
7	106-0699	1	Decal-Warning, Hot Surfaces
8	32128-21	1	Nut-HF
9	323-14	1	Screw-HH
10	322-7	4	Screw-HH
11	1-303334	4	Washer-Spring
12	103-1966	1	Adapter
13	92-6877	1	Valve-Drain, Oil
14	32128-20	4	Nut-HF
15	109-0293	1	Hose-Fuel
16	1-603770	1	Valve-Fuel
17	109-0306	1	Hose-Fuel
18	322-3	2	Screw-HH
19	1-805005	2	Washer-Lock
20	106-0730	1	Fuel Tank ASM
20:2	103-2605	1	Fitting-Fuel, Bulkhead
21	88-3980	1	Gas Cap ASM
21:3	88-4010	1	Gasket-Cap, Gas
22	33113-016	1	Screw-HH

Ref	Part No.	Qty.	Description
23	1-805004	1	Washer-Lock
24	100-6467	1	Muffler
25	103-5465	1	Clamp-Muffler
26	5-0652	2	Spacer
27	3296-39	1	Nut-Lock, NI
28	1-413510	1	Clip-Loom
29	33114-016	1	Screw-HH
30	323-8	8	Screw-HH
31	98-5975	8	Washer-Belleville
32	3290-357	8	Nut-HHF, Whiz
99	103-1964	1	Hose-Drain, Oil

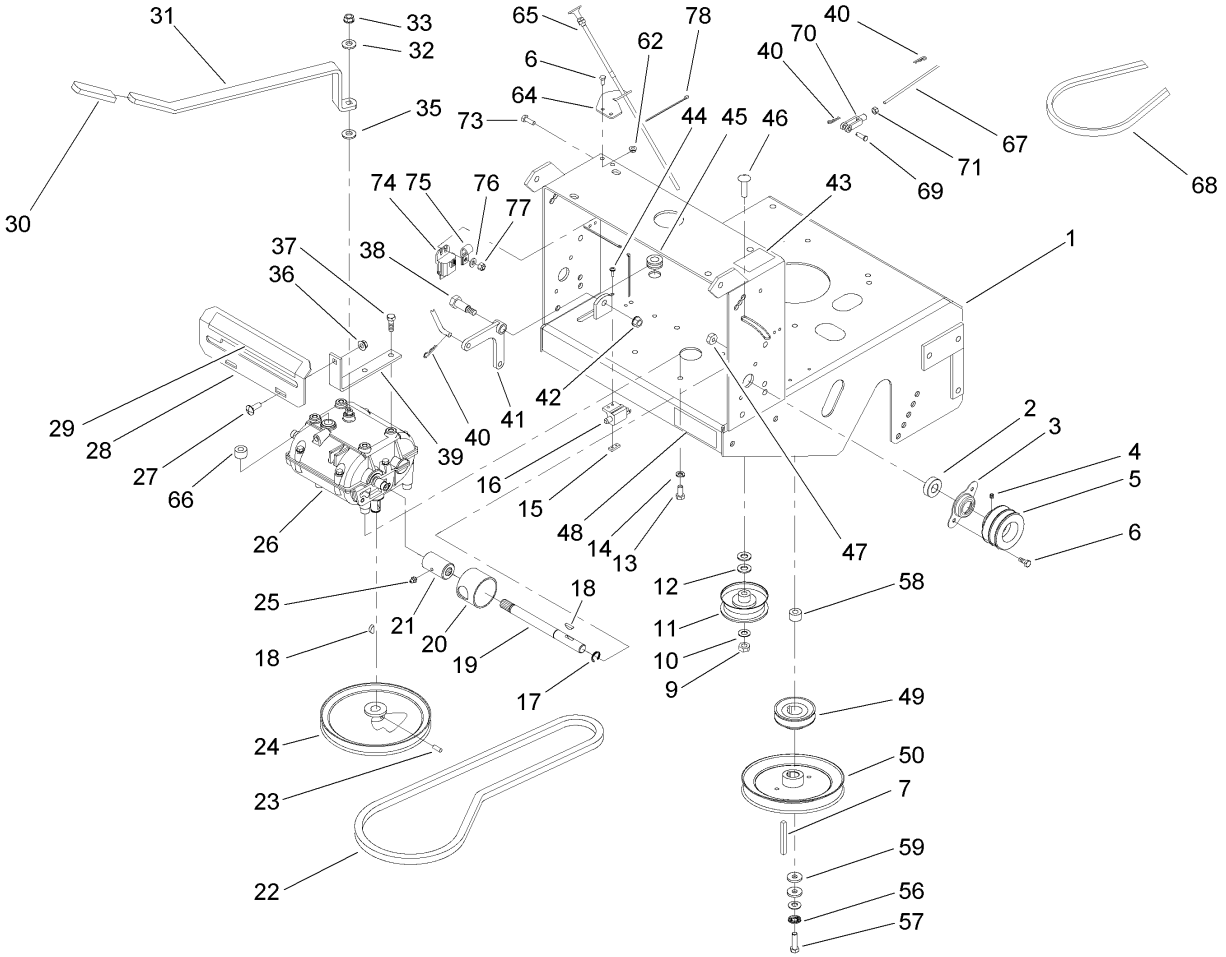

Transmission Drive Assembly

Ref	Part No.	Qty.	Description
1	103-9897-01	1	Deck-Engine
2	1-323252	2	Bearing-Shaft
3	1-323254	2	Flange-Output
4	1-803310	2	Screw-Set
5	103-6511	2	Sheave-Transmission
6	321-3	6	Screw-HH
7	103-4177	1	Key-Machine
9	3296-39	1	Nut-Lock, NI
10	3256-24	1	Washer-Flat
11	1-323285	1	Idler-Drive, Transmission
12	3256-5	2	Washer-Flat
13	322-3	4	Screw-HH
14	1-805005	4	Washer-Lock
15	1-633181	1	Plate-Tapped
16	1-513051	1	Switch-Open, Normally
17	32151-62	2	Ring-Retaining
18	3257-5	3	Key-Woodruff
19	1-323502	2	Shaft-Transmission
20	51-4220	2	Guard-Coupler
21	1-323680	2	Coupler
22	1-323630	1	V-Belt
23	3245-41	2	Screw-HSH
24	1-323278	1	Sheave-Transmission
25	302-19	2	Fitting-Grease

Ref	Part No.	Qty.	Description
26	1-323500	1	Transmission
27	3230-1	2	Bolt-CARR
28	1-323387-03	1	Plate-Shift
29	105-4104	1	Decal-Speed, Ground
30	1-303020	1	Grip-Lever
31	98-3274-03	1	Lever-Shift
32	98-5975	1	Washer-Belleville
33	3296-6	1	Nut-Lock
35	1-323379	1	Washer
36	32128-20	2	Nut-HF
37	9264964	4	Screw-HWH, Thread Cut
38	1-603403	1	Bolt-Shoulder
39	1-323389-03	2	Bracket-Plate, Shift
40	1-806003	1	Pin-Hair
41	1-303186	1	Bellcrank
42	3290-357	1	Nut-HHF, Whiz
43	95-2814	1	Decal-Shut Off, Fuel
44	3290-500	2	Screw-PPH
45	1-543296	1	Grommet
46	3231-6	1	Screw-CARR
47	3296-42	4	Nut-Lock, NI
48	98-0776	1	Decal-Caution
49	103-1666	1	Sheave-Transmission
50	110-4891	1	Pulley ASM

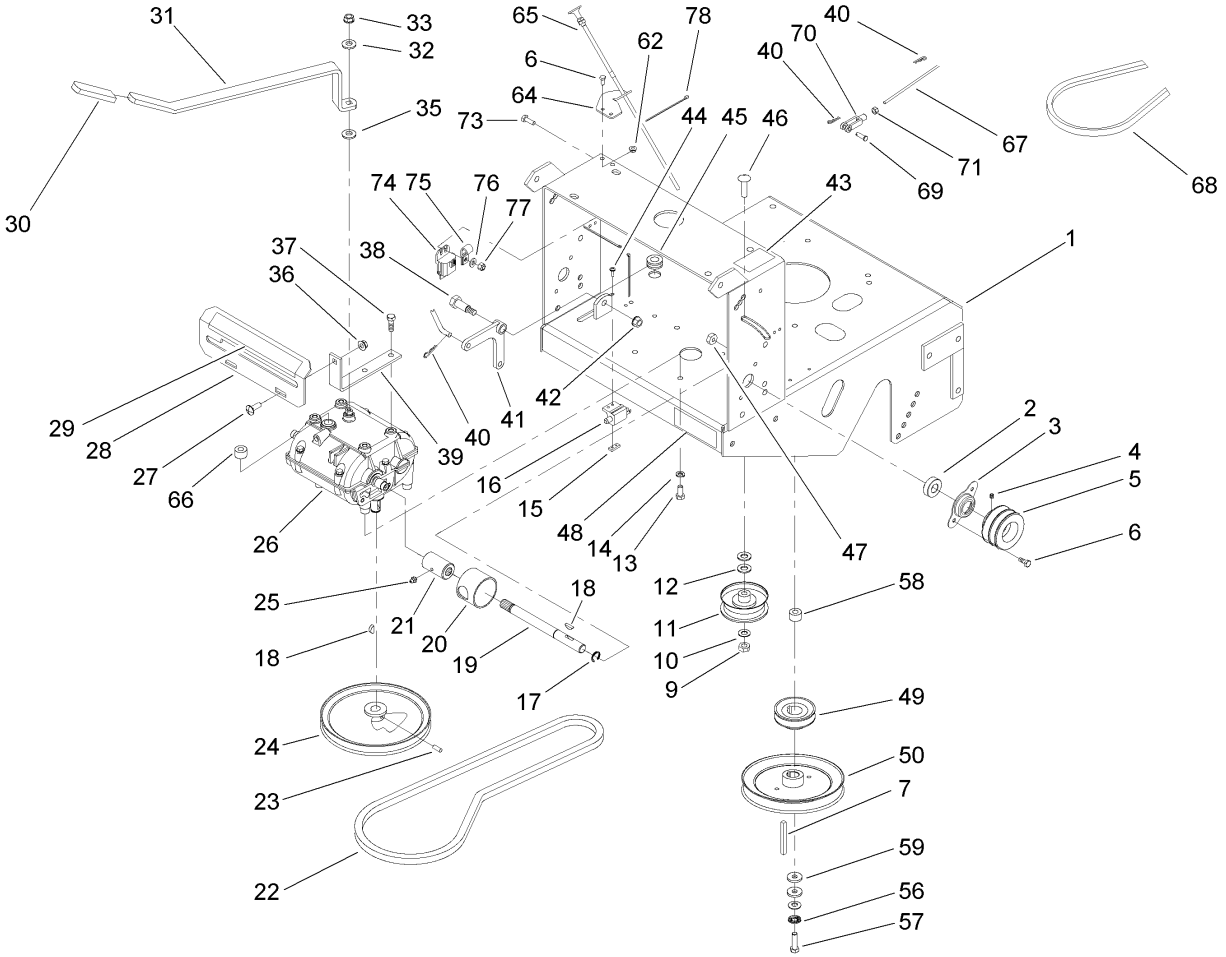

Transmission Drive Assembly (continued)

Ref	Part No.	Qty.	Description
56	1-603610	2	Washer-Spring
57	3212-6	1	Screw-HH
58	1-633453	1	Spacer-Clutch
59	1-373034	2	Washer
62	32128-33	2	Nut-HF
64	103-1797-01	1	Bracket-Cable, Choke
65	103-1796	1	Cable-Choke
66	1-303282	1	Switch-Start, Neutral
67	1-323303	1	Linkage-Arm
68	110-4886	1	Belt-V
69	1-808280	1	Pin-Clevis
70	1-303105	1	Yoke-Adjustable
71	3219-2	1	Nut-Hex
73	321-4	1	Screw-HH
74	1-323430	1	Module-Interlock
75	1-323229	1	Clip-Loom
76	3256-22	1	Washer-Flat
77	3296-42	1	Nut-Lock, NI
78	1-303335	1	Tie-Plastic

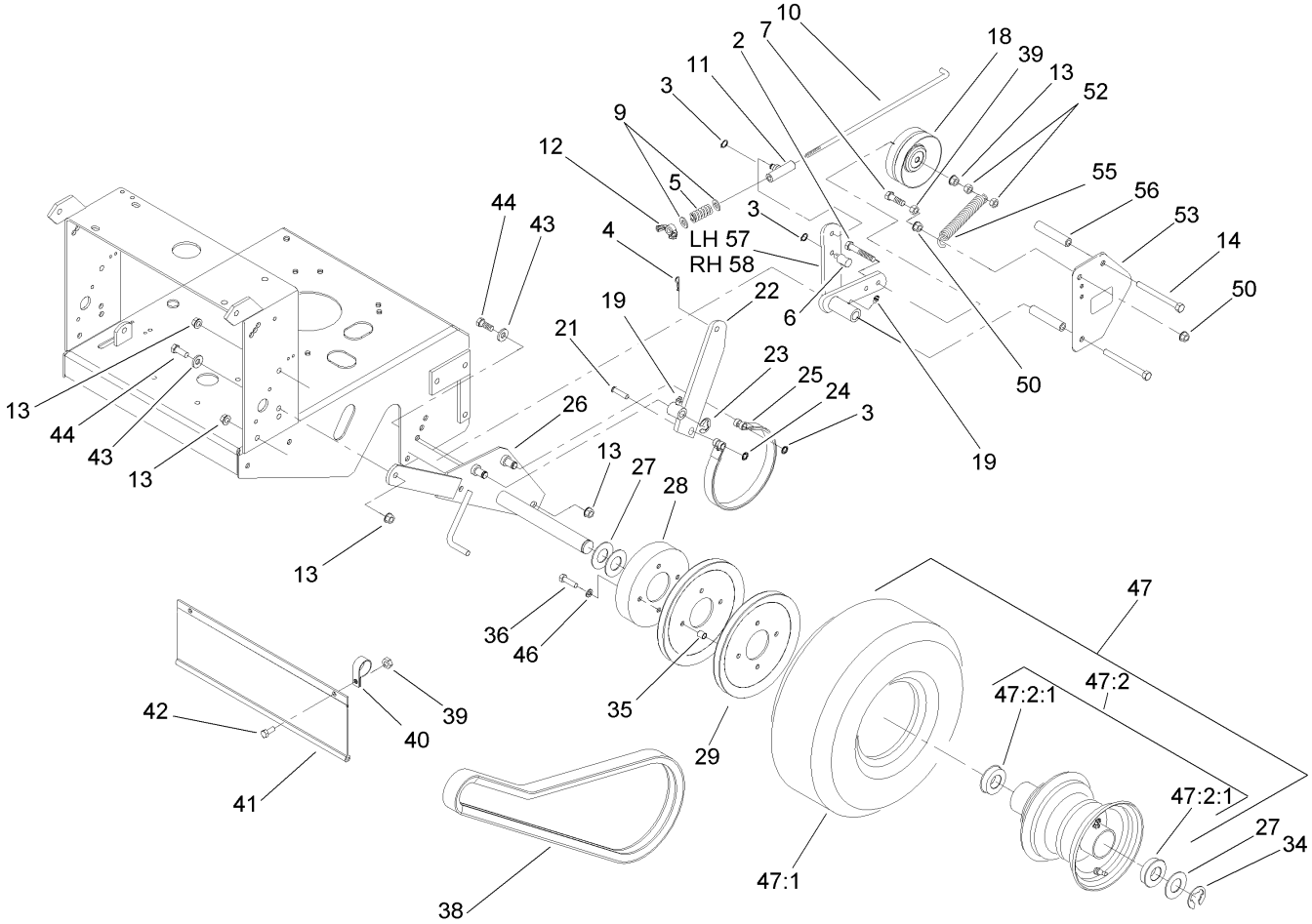

Wheel Drive and Brake Assembly

Ref	Part No.	Qty.	Description
2	99-8664	2	Screw-HH
3	32151-47	6	Ring-Retaining
4	1-806003	2	Pin-Hair
5	1-323245	2	Spring-Compression
6	103-1864	2	Swivel-Lever, Drive
7	322-6	2	Screw-HH
9	3256-23	4	Washer-Flat
10	1-323548	2	Linkage-Brake
11	1-322125	2	Swivel-Brake
12	1-513959	2	Wingnut-Nylock
13	3290-357	10	Nut-HHF, Whiz
14	323-39	4	Screw-HH
18	1-323277	2	Idler-Wheel, Drive
19	302-19	2	Fitting-Grease
21	1-323307	2	Pin-Clevis
22	103-1611-03	2	Arm-Brake
23	32120-47	2	Ring-Retaining, External
24	1-803051	2	Nut-Push
25	1-323262	2	Band-Brake
26	1-322117-03	1	Axle
27	1-523157	6	Washer-Spacer, 14 GA
27	1-543436	8	Washer-Spacer, 16GA
28	1-323261	2	Drum-Brake
29	1-323253	4	Sheave-Wheel, Drive

Ref	Part No.	Qty.	Description
34	1-808519	2	Ring-Snap
35	1-323260	8	Spacer-Sheave, Wheel
36	322-6	8	Screw-HH
38	1-323631	2	V-Belt
39	3296-29	4	Nut-Lock, NI
40	2412-104	2	R-Clamp
41	98-3259	1	Shield-Trailing
42	322-3	2	Screw-HH
43	98-5975	4	Washer-Belleville
44	323-6	4	Screw-HH
46	1-805005	8	Washer-Lock
❷47		2	Wheel And Tire ASM
47:1	1-323720	1	Tire-Turfmaster
47:2	1-323328	1	Wheel And Hub ASM
47:2:1	1-323329	2	Bearing-Flanged
50	32128-20	4	Nut-HF
52	3296-39	4	Nut-Lock, NI
53	1-323287-01	2	Shield-Wheel, Drive
55	1-603402	2	Spring-Extension
56	1-323283	4	Spacer-Shield
57	103-1615-03	1	Arm-Idler, LH
58	103-1616-03	1	Arm-Idler, RH

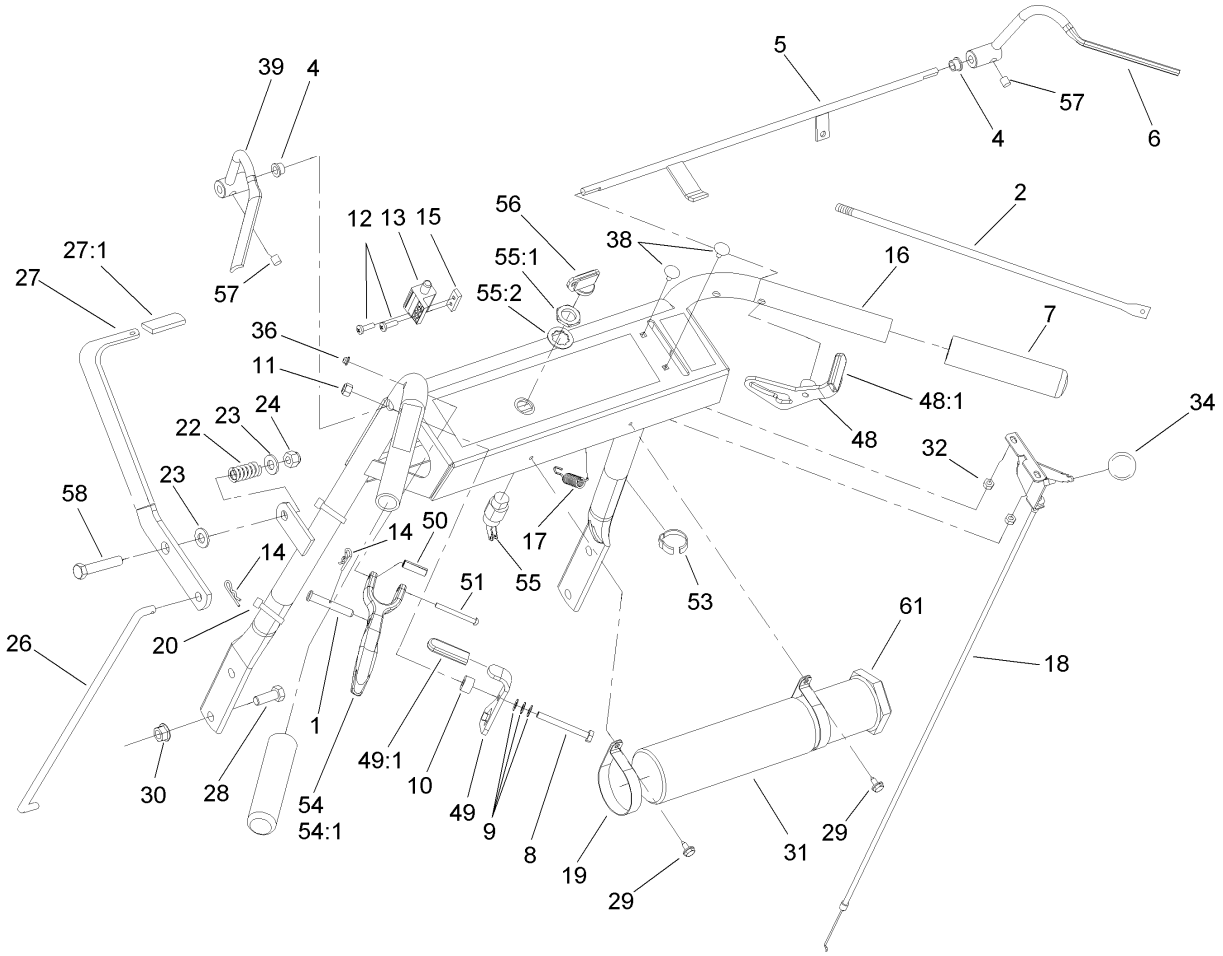

Handle and Control Assembly

Ref	Part No.	Qty.	Description
1	1-808286	2	Pin-Clevis
2	1-323359	2	Linkage-Wheel, Drive
4	1-303365	2	Bushing-Nylon
5	106-2717-03	1	Rod-Control, Operator Presence
6	106-5486	1	RH Opc Lever ASM
7	104-9838	2	Grip-Foam
8	321-18	2	Screw-HH
9	1-303435	6	Washer-Spring
10	1-323549	2	Spacer
11	3296-42	2	Nut-Lock, NI
12	3290-500	2	Screw-PPH
13	1-513051	1	Switch-Open, Normally
14	1-806003	3	Pin-Hair
15	1-633181	1	Plate-Tapped
16	110-6906	1	Gear Handle ASM
17	1-303363	1	Spring-Extension
18	1-633696	1	Throttle Cable ASM
19	2412-120	2	R-Clamp
20	1-303287	2	Tie-Plastic
22	1-303160	1	Spring-Compression
23	3256-4	2	Washer-Flat
24	3296-39	1	Nut-Lock, NI
26	1-323298	1	Linkage-Blade, Upper
27	1-322157	1	Lever ASM

Ref	Part No.	Qty.	Description
27:1	1-303020	1	Grip-Lever
28	3234-11	4	Screw-HHF
29	32104-76	2	Screw
30	32128-21	4	Nut-HF
31	104-7050	1	Housing-Manual
32	3296-2	2	Nut-Lock
34	1-513592	1	Knob-Ball
36	1-803001	2	Nut
38	1-807513	2	Bolt-CARR
39	106-5485	1	LH Opc Lever ASM
48	1-324280	1	RH Thumb Latch ASM
48:1	1-303019	1	Grip-Latch
49	1-324279	1	LH Thumb Latch ASM
49:1	1-303019	1	Grip-Latch
50	1-806340	2	Pin-Roll
51	1-808250	2	Pin-Lever, Drive
❶52	103-1610	1	Harness-Wiring
53	1-303088	1	Clip-Cable
54	1-302006	2	Drive Lever ASM
54:1	1-303021	1	Grip-Lever, Drive
55	29-5560	1	Switch-On / Off
55:1	218-461	1	Nut-HH
55:2	3254-5	1	Washer-Tooth
56	63-8360	1	Key-Ignition

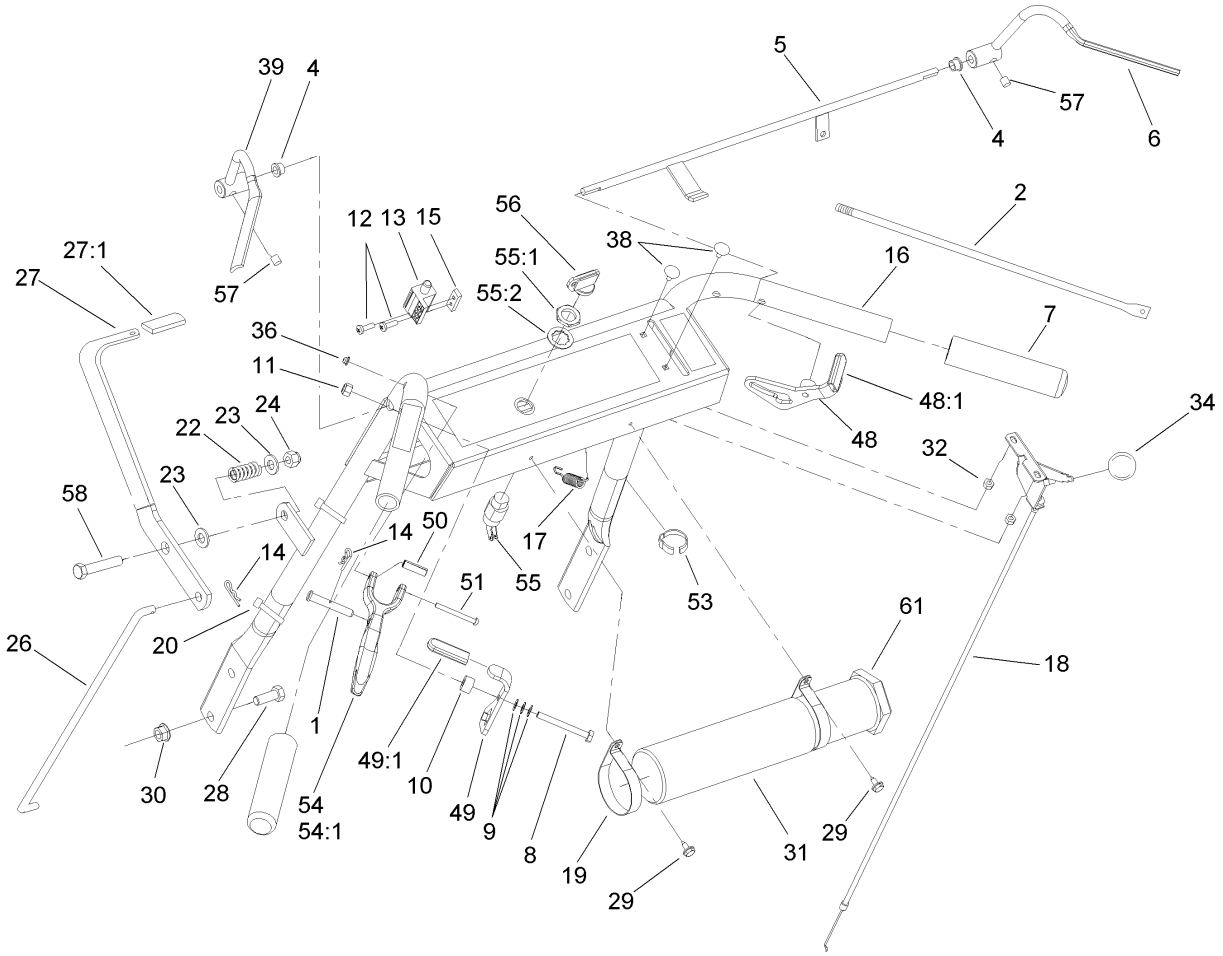

Handle and Control Assembly (continued)

Ref	Part No.	Qty.	Description
57	1-803322	2	Screw-Set
58	323-10	1	Screw-HH
61	104-7048	1	Cap-Housing

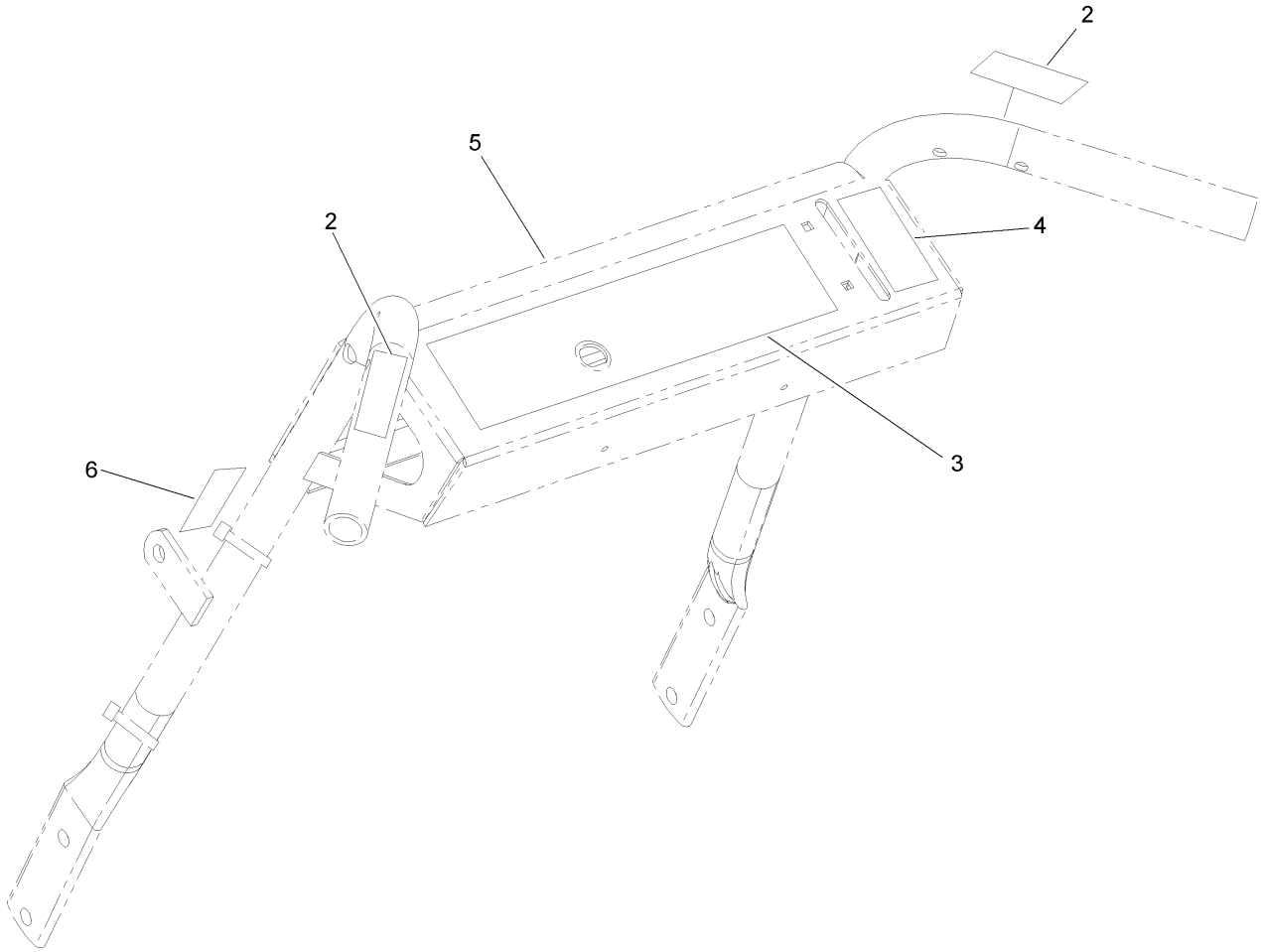

Control Panel Decal Assembly No. 110-6906

Ref	Part No.	Qty.	Description
2	105-4111	2	Decal-Lock, Neutral
3	106-2737	1	Decal-Warning
4	106-2733	1	Decal-Throttle
5	110-6917	1	Decal-Control Panel
6	95-5537	1	Decal-Engage, Deck

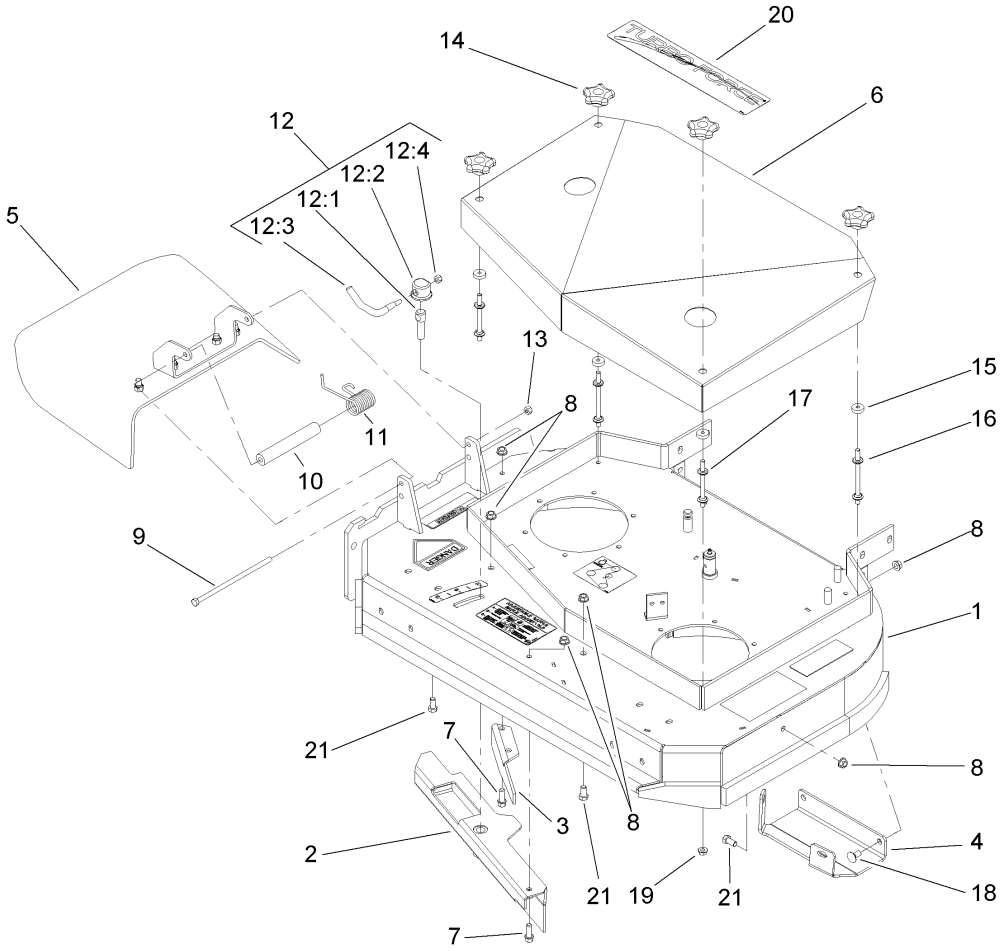

Deck Assembly

Ref	Part No.	Qty.	Description
1	110-4907	1	Deck ASM
2	110-2031-01	1	Adjustable Baffle
3	110-0754-01	1	Baffle-Discharge
4	110-2037-01	1	Plate-Skid
5	110-0790	1	Deflector ASM
6	110-2036-01	1	Cover-Deck
7	92-1624	3	Screw
8	3290-357	10	Nut-HHF, Whiz
9	322-50	1	Screw-HH
10	105-4622	1	Spacer
11	104-8554	1	Spring-Torsion
12	107-1664	1	Lever ASM
12:1	106-3239	1	Screw-Lock
12:2	107-1644	1	Cap-Lock
12:3	106-3241	1	Lever-Lock
12:4	3296-29	1	Nut-Lock, NI
13	3296-29	1	Nut-Lock, NI
14	106-4161	4	Knob-Handle
15	1-323417	4	Washer
16	1-303536	2	Stud-Shield, Belt (Long)
17	1-303537	2	Stud-Shield, Belt (Short)
18	3231-1	4	Screw-CARR
19	32128-20	4	Nut-HF
20	110-6918	1	Decal

Ref	Part No.	Qty.	Description
21	323-4	3	Screw-HH

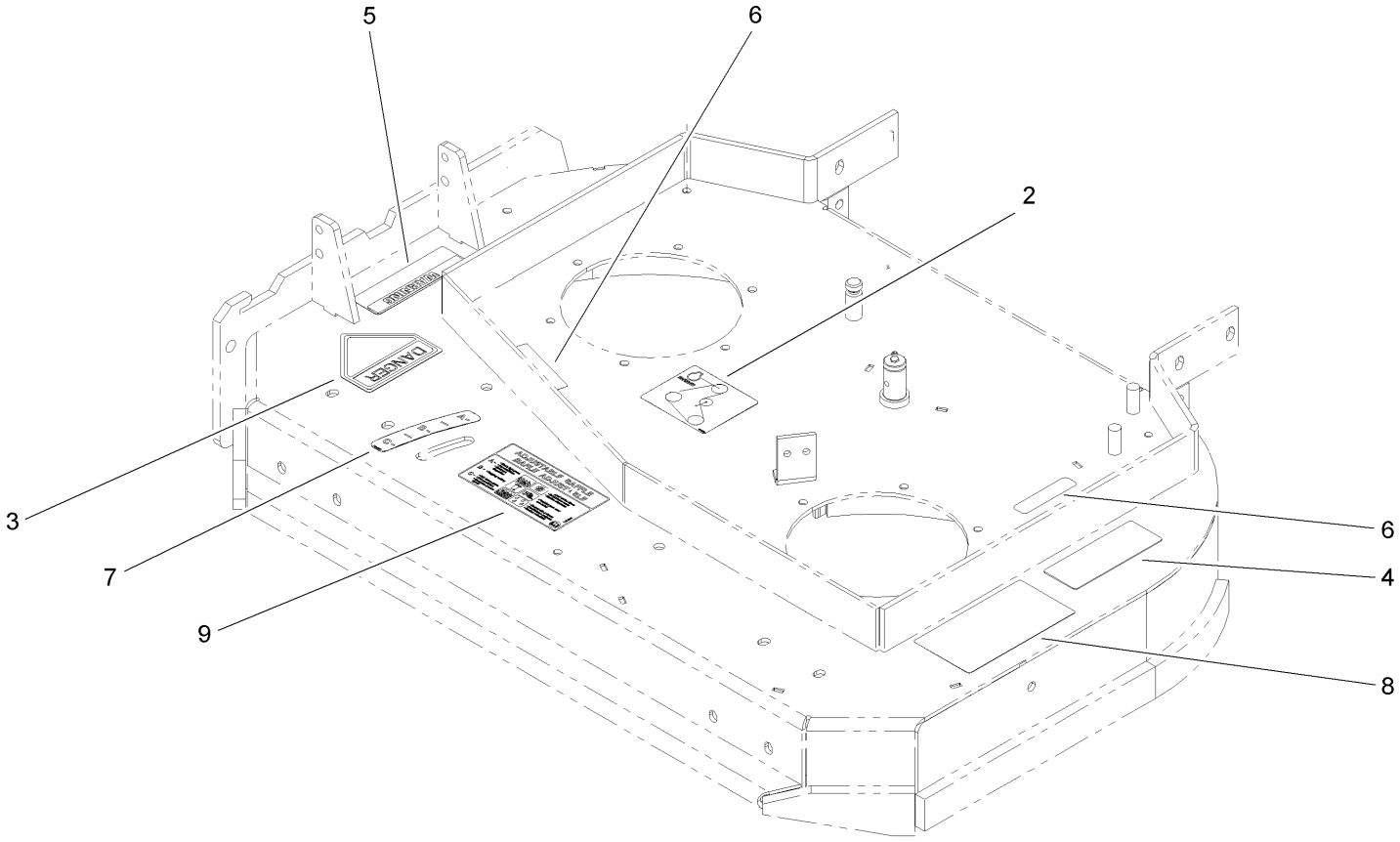

Deck Decal Assembly No. 110-4907

Ref	Part No.	Qty.	Description
2	98-3296	1	Decal-Routing, Belt
3	43-8480	1	Decal-Danger
4	98-5130	1	Decal-Torque, Bolt
5	104-8569	1	Decal-Warning
6	98-5954	2	Decal-Cover, Missing
7	110-2067	1	Decal-Setting, Baffle
8	66-1340	1	Decal-Danger
9	110-2068	1	Decal-Adjustment, Baffle

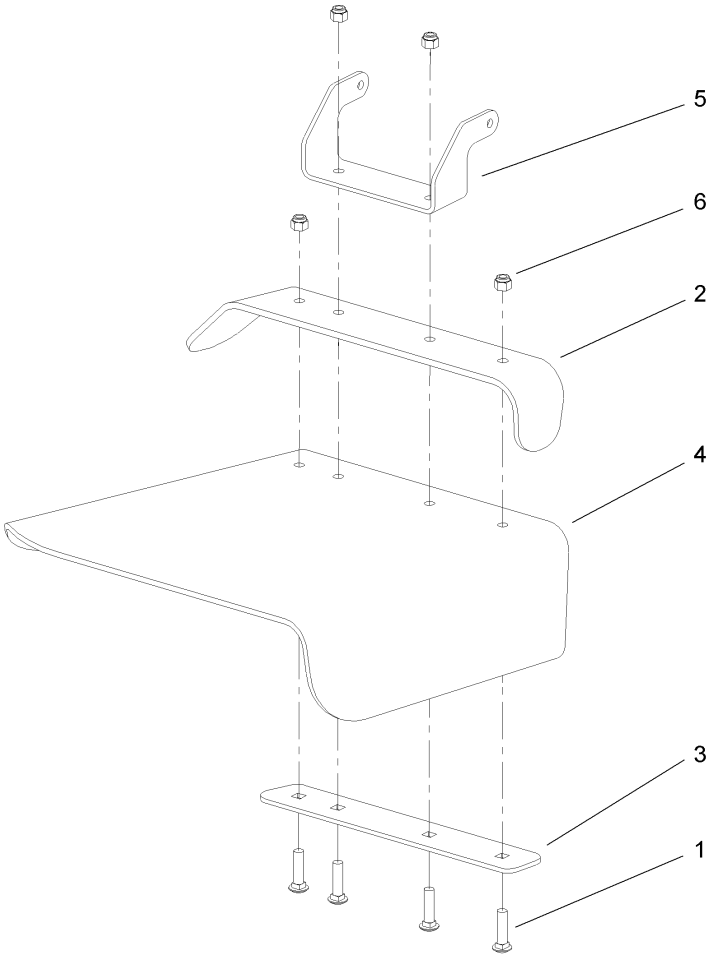

Deflector Assembly No. 110-0790

Ref	Part No.	Qty.	Description
1	3231-4	4	Screw-CARR
2	110-0792-01	1	Deflector
3	110-0793-03	1	Strap-Discharge
4	110-0791	1	Deflector-Rubber
5	107-4164-01	1	Bracket-Mounting, Deflector
6	3296-39	4	Nut-Lock, NI

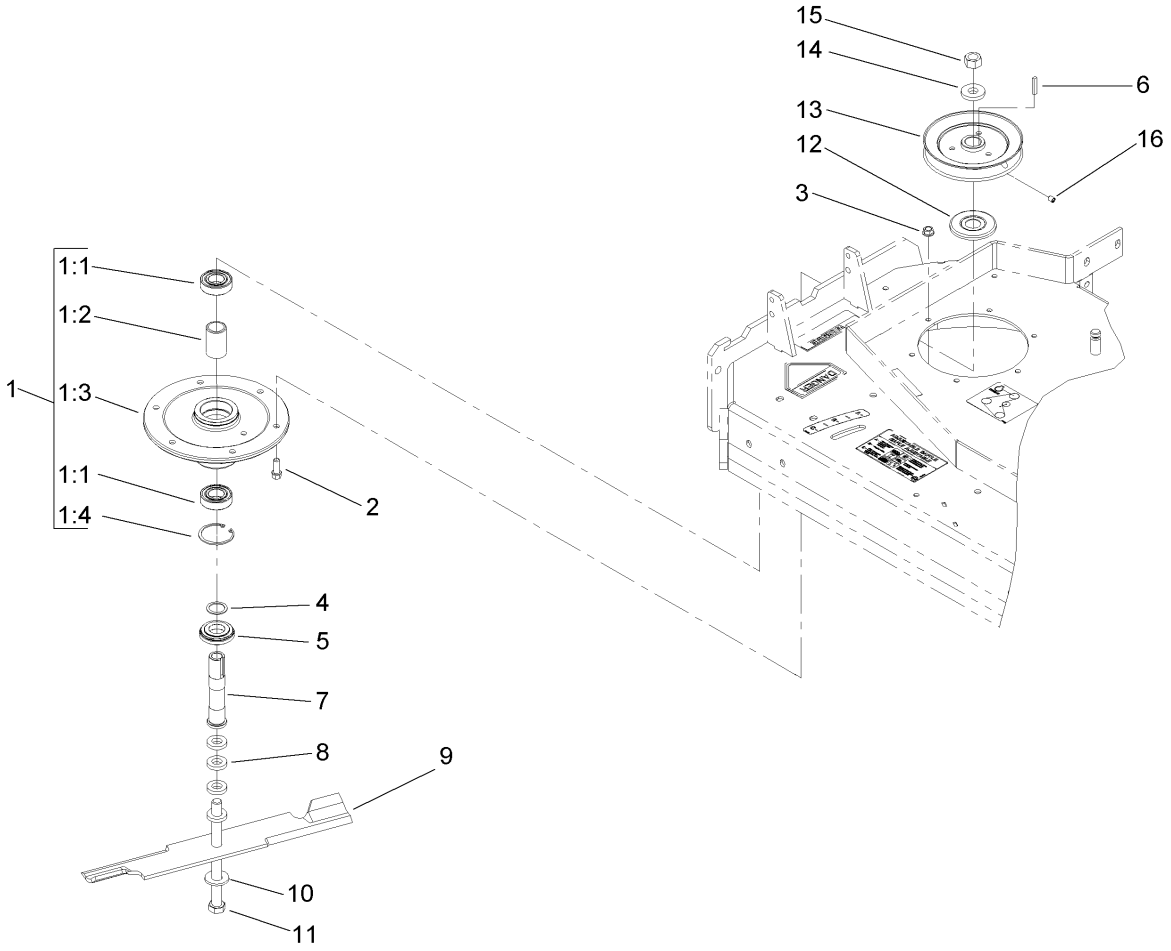

Sheave, Spindle and Blade Assembly

Ref	Part No.	Qty.	Description
1	108-6697	2	Spindle Housing ASM
1:1	110-2118	2	Bearing
1:2	110-2116	1	Spacer-Bearing
1:3	108-6694	1	Housing-Spindle
1:4	32120-8	1	Ring-Snap
2	92-1624	12	Screw
3	3290-357	12	Nut-HHF, Whiz
4	110-4888	2	Washer-Spacer
5	103-2535	2	Spacer-Guard, Bottom
6	1-807267	2	Key
7	1-323529	2	Tube-Spindle, Short
8	1-323539	8	Spacer-Drive, Blade
9	105-7781	2	Blade-Hi Flow, 18 Inch
10	1-513208	2	Washer-Spring
11	1-800861	2	Screw-Cap, HH
12	103-1330	2	Guard-Bearing, Top
13	1-403183	2	Sheave
14	1-323339	2	Washer-Retainer, Sheave
15	3219-6	2	Nut-Hex
16	1-803310	2	Screw-Set

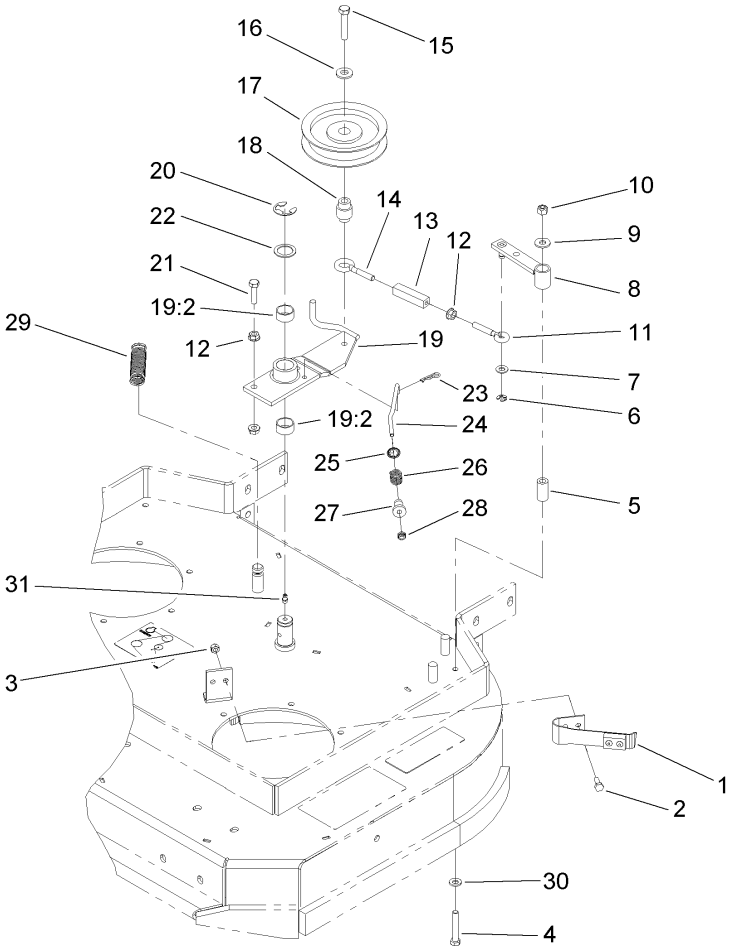

Idler Assembley

Ref	Part No.	Qty.	Description
1	1-324372	1	Pad / Spring ASM
2	321-4	2	Screw-HH
3	3296-42	2	Nut-Lock, NI
4	322-10	1	Screw-HH
5	1-403179	1	Tube-Pivot
6	32120-35	1	E-Ring
7	3256-23	1	Washer-Flat
8	1-322235	1	Arm-Assist
9	3256-3	1	Washer-Flat
10	3296-29	1	Nut-Lock, NI
11	1-303238	1	Eyebolt-Thread, RH
12	32128-20	3	Nut-HF
13	1-303236	1	Body-Turnbuckle
14	1-303348	1	Eyebolt-Thread, LH
15	702809	1	Screw-Cap
16	98-5975	1	Washer-Belleville
17	1-603843	1	Pulley-Idler
18	1-303434	1	Bushing-Engagement
19	103-3600	1	Idler Arm ASM
19:2	1-323729	2	Sleeve-Bearing
20	32151-103	1	Ring-Snap
21	322-6	1	Screw-HH
22	1-303352	1	Washer-Spindle
23	1-806003	1	Pin-Hair

Ref	Part No.	Qty.	Description
24	1-323715	1	Rod-Brake
25	1-323748	1	Ring-Push On
26	1-323747	1	Spring-Compression
27	1-323746	1	Spacer-Flanged
28	3296-56	1	Nut-Lock, NI
29	1-323071	1	Spring-Extension
30	1-303334	1	Washer-Spring
31	302-19	2	Fitting-Grease

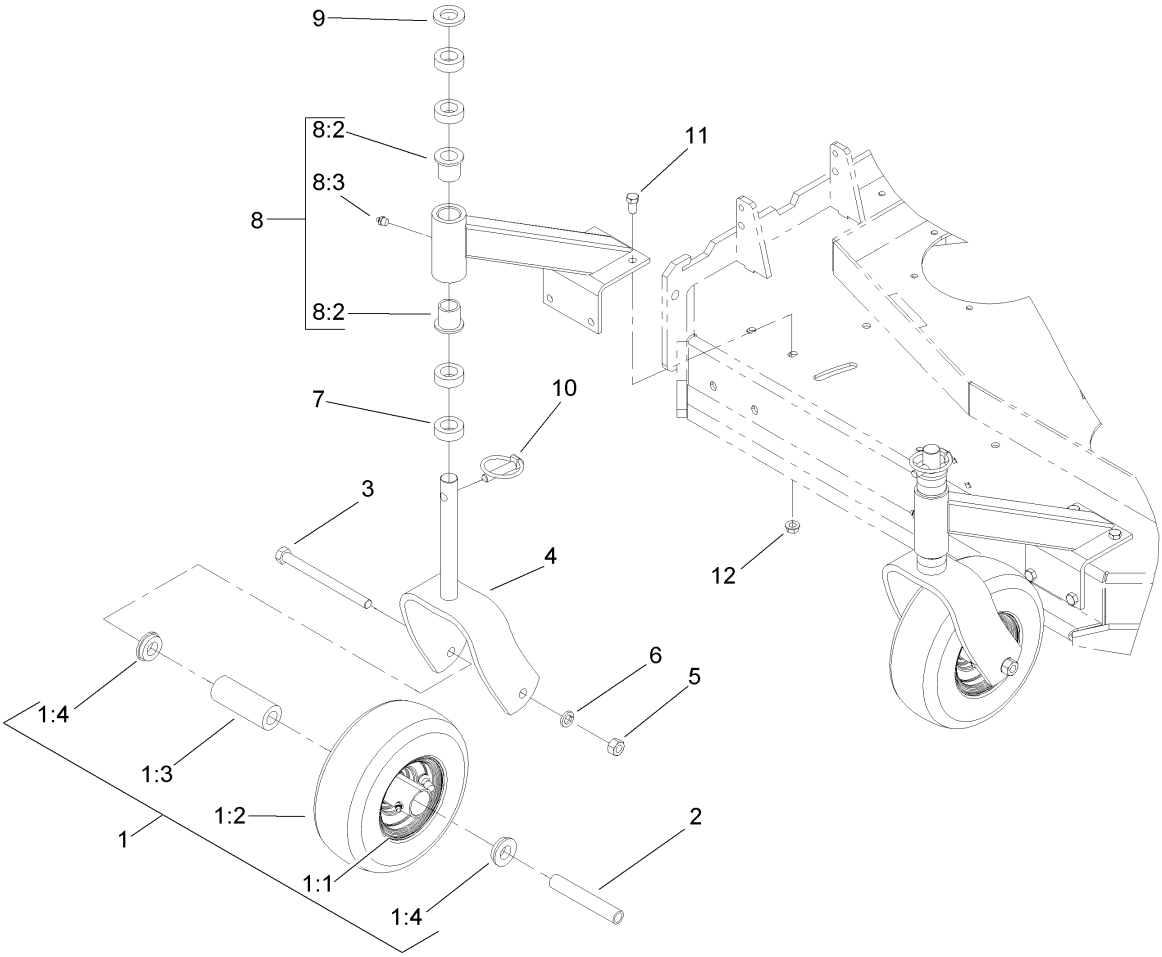

Caster Assembly

Ref	Part No.	Qty.	Description
1	1-513648	2	Wheel And Tire ASM
❷1:1		1	Rim
1:2	1-513808	1	Tire
1:3	1-513809	1	Bearing
1:4	1-513810	2	Bushing
2	1-513547	2	Spacer
3	325-20	2	Screw-HH
4	1-322145-01	2	Fork
5	3217-9	2	Nut-Hex
6	3253-7	2	Washer-Lock
7	1-303314	8	Spacer-Caster
8	110-2130	2	Support ASM
8:2	1-303514	2	Bearing-Flanged
8:3	302-52	1	Fitting-Grease
9	1-513338	2	Washer-Flat
10	1-809020	2	Pin
11	323-4	8	Screw-HH
12	3290-357	8	Nut-HHF, Whiz

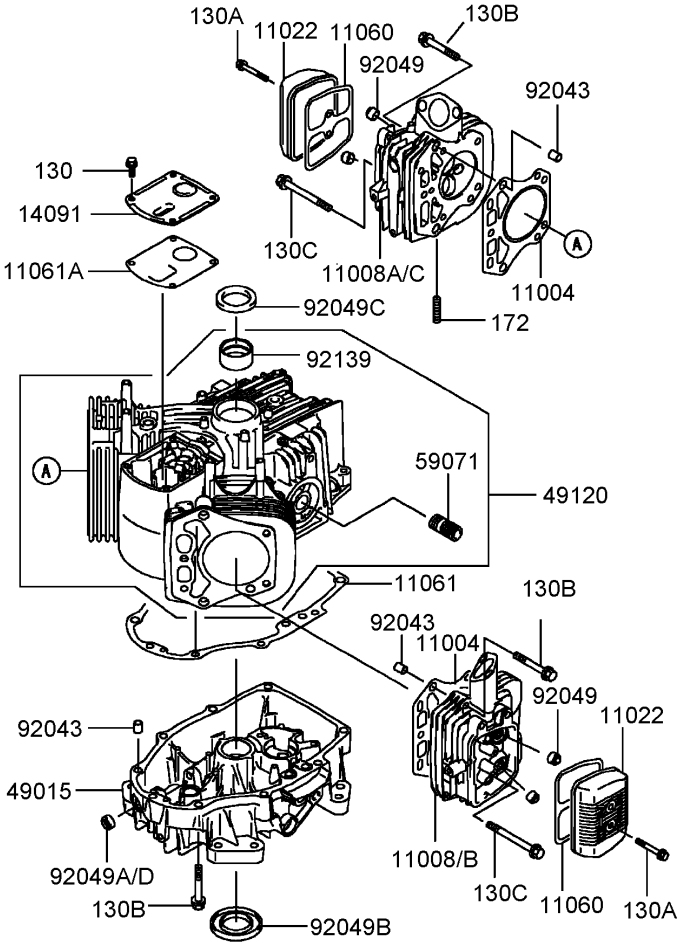

Cylinder and Crankcase Assembly
Kawasaki Model FH430V-AS25

Ref	Part No.	Qty.	Description
❸11004	11004-7008	1	Gasket-Head
❸11008	11008-7011	1	Head-Comp-Cylinder, No.2
❸11008A	11008-7017	1	Head-Comp-Cylinder, No.1
❸11008B	11008-7021	1	Head-Cylinder, No. 2
❸11008C	11008-7022	1	Head-Cylinder, No. 1
❸11022	11022-7003	1	Case-Rocker
❸11060	11060-7001	1	Gasket-Case, Rocker
❸11061	11061-7007	1	Gasket-Cover, Crankcase
❸11061A	11061-7008	1	Gasket-Breather
❸14091	14091-7007	1	Cover
❸49015	49015-7032	1	Cover-Crankcase
❸49120	49120-7015	1	Crankcase
❸59071	59071-2079	1	Joint
❸92043	92043-7001	1	Pin
❸92049	92049-7001	1	Seal-Oil, Rvc2 (6X11X10.2)
❸92049A	92049-7005	1	Seal-Oil, So (8X14X5 Hs)
❸92049B	92049-7015	1	Seal-Oil, Sd (35X62X8 L Hs)
❸92049C	92049-7016	1	Seal-Oil, Sd (35X48X8 R Hs)
❸92049D	92049-7019	1	Seal-Oil, So (8X14X5 Hs)
❸92139	92139-7002	1	Bushing
❸130	130B0612	1	Bolt-Flanged
❸130A	130B0640	1	Bolt-Flanged
❸130B	130T0850	1	Bolt-Flanged
❸130C	130T0875	1	Bolt-Flanged

Ref	Part No.	Qty.	Description
❸172	172G0818	1	Bolt-Stud

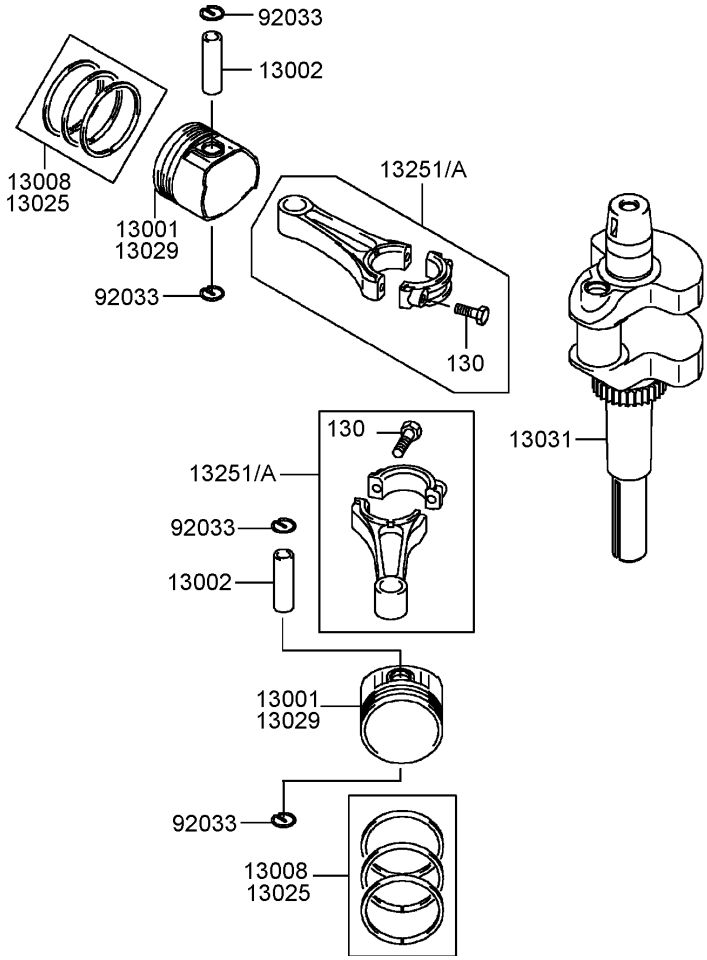

Piston and Crankshaft Assembly
Kawasaki Model FH430V-AS25

Ref	Part No.	Qty.	Description
❸13001	13001-7009	1	Piston-Engine
❸13002	13002-7001	1	Pin-Piston
❸13008	13008-7001	1	Ring Set-Piston
❸13025	13025-7003	1	Ring Set-Piston (L,0.50)
❸13029	13029-7005	1	Piston-Engine (L,0.50)
❸13031	13031-7033	1	Crankshaft
❸13251	13251-7007	1	Connecting Rod ASM
❸13251A	13251-7008	1	Connecting Rod ASM (U/S=0.50)
❸92033	92033-7005	1	Ring-Snap
❸130	130G0630	1	Bolt-Flanged

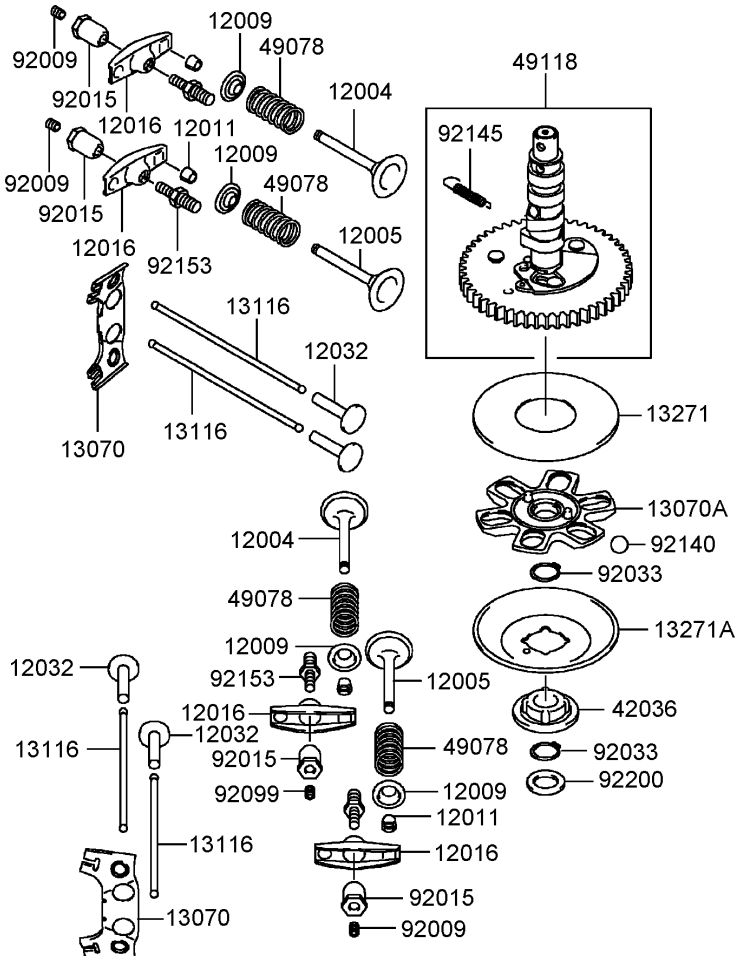

Valve and Camshaft Assembly
Kawasaki Model FH430V-AS25

Ref	Part No.	Qty.	Description
❸12004	12004-7003	1	Valve-Intake
❸12005	12005-7003	1	Valve-Exhaust
❸12009	12009-7001	1	Retainer-Spring, Valve
❸12011	12011-2056	1	Collet
❸12016	12016-7001	1	Arm-Rocker
❸12032	12032-7001	1	Tappet
❸13070	13070-7001	1	Guide
❸13070A	13070-7004	1	Guide
❸13116	13116-2057	1	Rod-Push
❸13271	13271-7007	1	Plate
❸13271A	13271-7021	1	Plate-Governor
❸42036	42036-7009	1	Sleeve
❸49078	49078-7001	1	Spring-Valve, Engine
❸49118	49118-7009	1	Camshaft
❸92009	92009-2341	1	Screw
❸92015	92015-2253	1	Nut
❸92033	92033-7001	1	Ring-Snap
❸92140	92140-7002	1	Ball
❸92145	92145-7001	1	Spring
❸92153	92153-7019	1	Bolt
❸92200	92200-7001	1	Washer

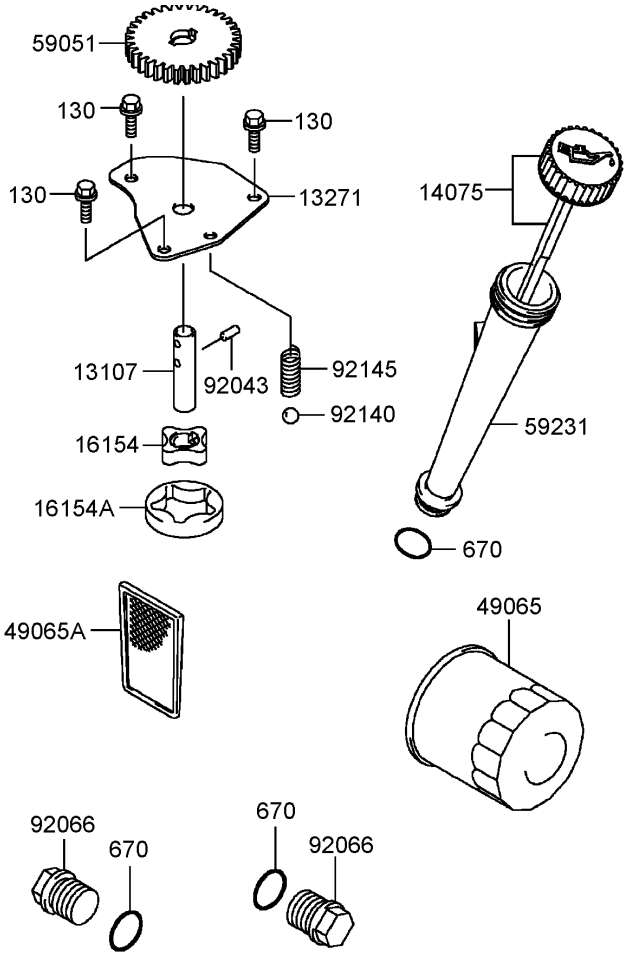

Lubrication Equipment Assembly
Kawasaki Model FH430V-AS25

Ref	Part No.	Qty.	Description
❸13107	13107-7009	1	Shaft
❸13271	13271-7017	1	Plate
❸14075	14075-7009	1	Cap ASM
❸16154	16154-2053	1	Rotor-Pump (In)
❸16154A	16154-2054	1	Rotor-Pump (Out)
❸49065	49065-2078	1	Filter-Oil
❸49065A	49065-7004	1	Filter-Oil
❸59051	59051-7011	1	Gear-Spur
❸59231	59231-7003	1	Filler
❸92043	92043-7003	1	Pin
❸92066	92066-7003	1	Plug
❸92140	92140-7003	1	Ball
❸92145	92145-7002	1	Spring
❸130	130B0612	1	Bolt-Flanged
❸670	670D2016	1	O-Ring (16Mm)

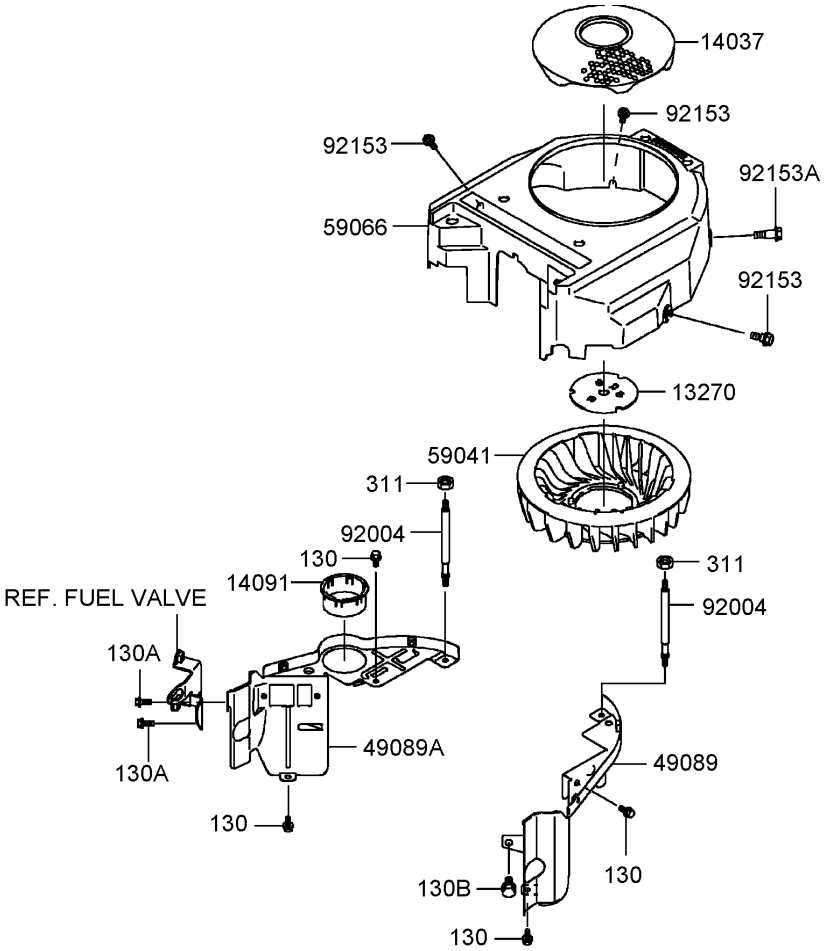

Cooling Equipment Assembly
Kawasaki Model FH430V-AS25

Ref	Part No.	Qty.	Description
❸13270	13270-7007	1	Plate
❸14037	14037-7021-9H	1	Screen
❸14091	14091-7009	1	Cover
❸49089	49089-7044	1	Shroud-Engine
❸49089A	49089-7045	1	Shroud-Engine
❸59041	59041-7010	1	Fan
❸59066	59066-7023	1	Housing-Fan
❸92004	92004-7007	1	Stud
❸92153	92153-7007	1	Bolt
❸92153A	92153-7008	1	Bolt
❸130	130B0612	1	Bolt-Flanged
❸130A	130B0616	1	Bolt-Flanged
❸130B	130B0816	1	Bolt-Flanged
❸311	311F0600	1	Nut-Hex

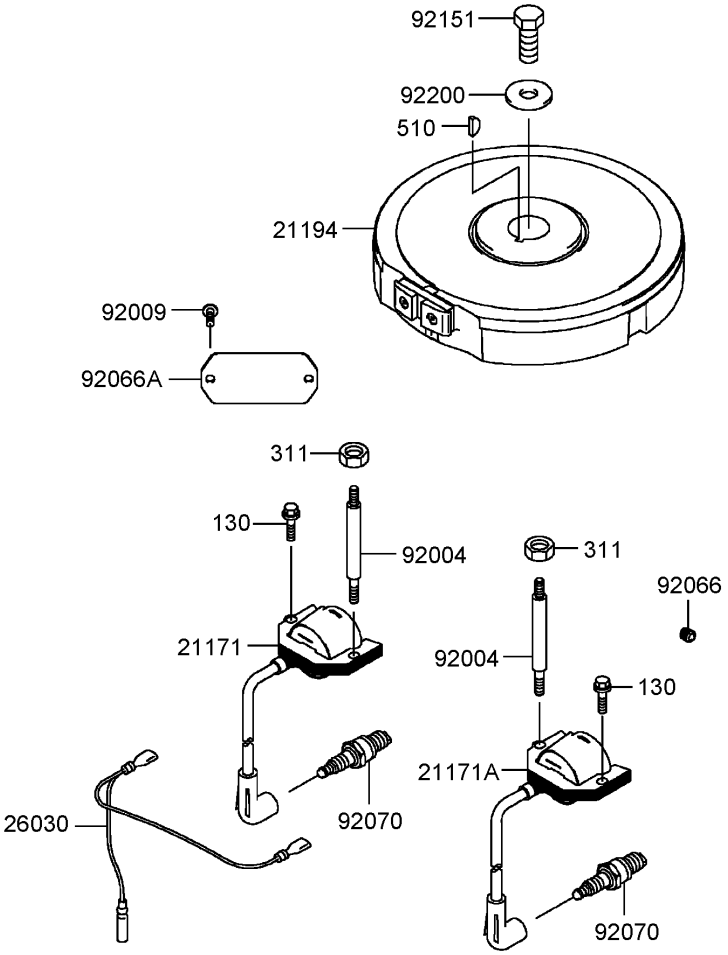

Electric Equipment Assembly
Kawasaki Model FH430V-AS25

Ref	Part No.	Qty.	Description
❸21171	21171-7013	1	Ignition Coil ASM
❸21171A	21171-7014	1	Ignition Coil ASM
❸21194	21194-7013	1	Flywheel-Comp
❸26030	26030-7001	1	Harness
❸92004	92004-7008	1	Stud
❸92009	92009-2308	1	Screw
❸92066	92066-7002	1	Plug
❸92066A	92066-7005	1	Plug
❸92070	92070-7003	1	Plug-Spark (Rcj8Y, Solid)
❸92151	92151-2097	1	Bolt (12X30)
❸92200	92200-7002	1	Washer
❸130	130B0620	1	Bolt-Flanged
❸311	311F0600	1	Nut-Hex
❸510	510A5100	1	Key-Woodruff

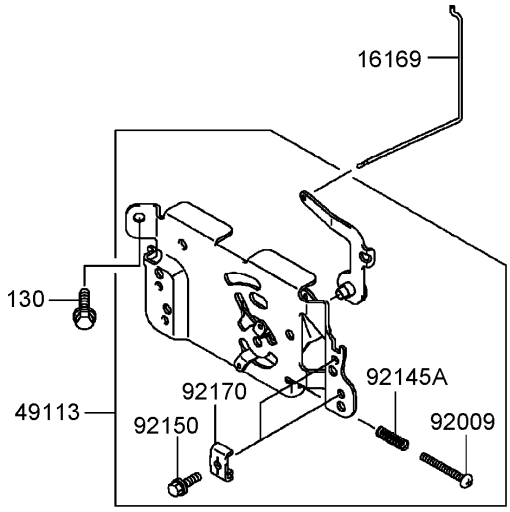

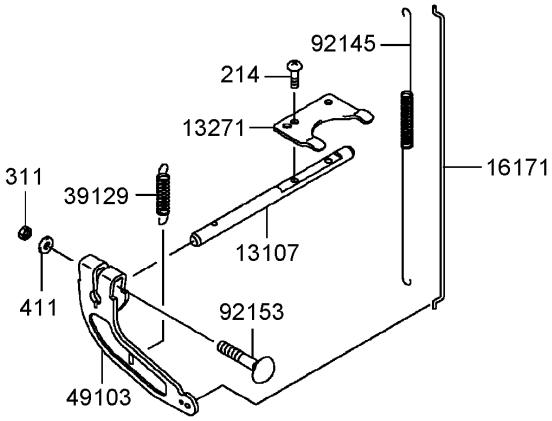

Control Equipment Assembly
Kawasaki Model FH430V-AS25

Ref	Part No.	Qty.	Description
❸13107	13107-7010	1	Shaft
❸13271	13271-7018	1	Plate
❸16169	16169-7012	1	Link-Choke
❸16171	16171-7007	1	Link
❸39129	39129-7003	1	Spring-Governor
❸49103	49103-7004	1	Arm-Governor
❸49113	49113-7024	1	Panel-Control
❸92009	92009-7007	1	Screw (4X35)
❸92145	92145-7003	1	Spring
❸92145A	92145-7005	1	Spring
❸92150	92150-2182	1	Bolt (5X18)
❸92153	92153-7005	1	Bolt (6X35)
❸92170	92170-7001	1	Clamp
❸130	130B0612	1	Bolt-Flanged
❸214	214B0408	1	Screw-Pan
❸311	311B0600	1	Nut-Hex
❸411	411b0600	1	Washer-Plain

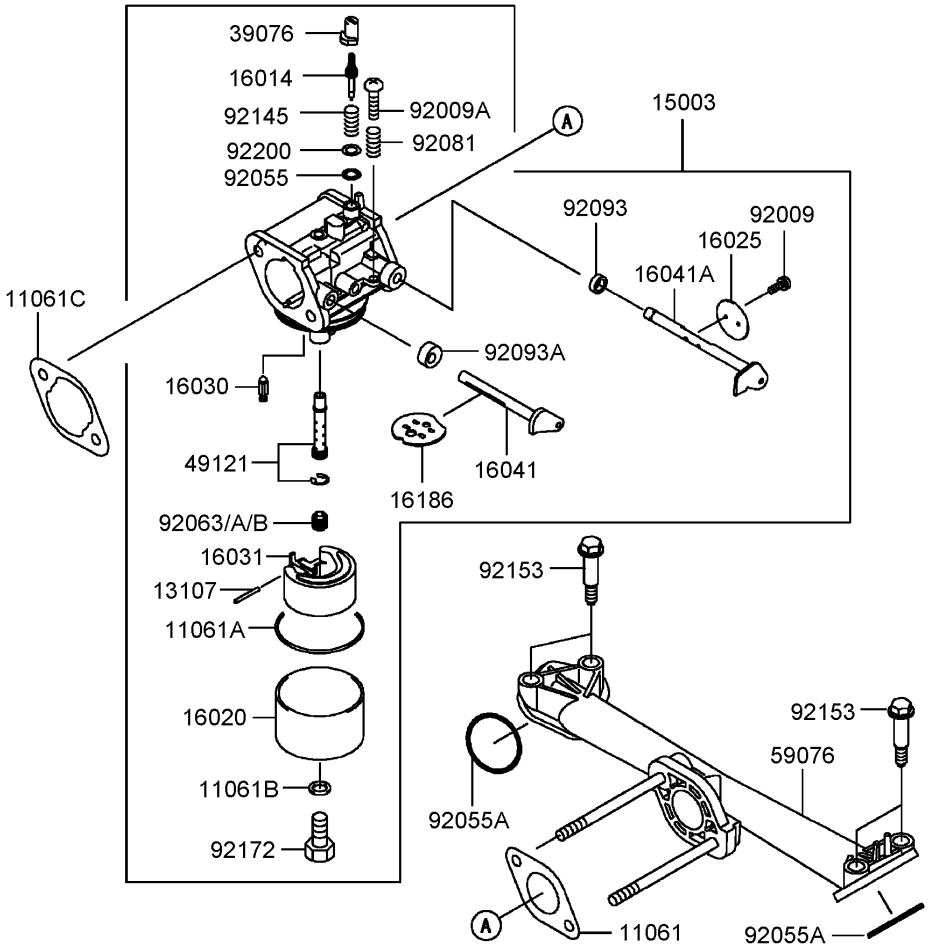

Carburetor Assembly
Kawasaki Model FH430V-AS25

Ref	Part No.	Qty.	Description
❸11061	11061-7004	1	Gasket-Insulator
❸11061A	11061-7009	1	Gasket-Chamber
❸11061B	11061-7010	1	Gasket-Screw
❸11061C	11061-7018	1	Gasket-Cleaner, Air
❸13107	13107-7018	1	Shaft
❸15003	15003-7061	1	Carburetor ASM
❸16014	16014-7002	1	Screw-Pilot
❸16020	16020-7003	1	Chamber-Float
❸16025	16025-7006	1	Valve-Throttle
❸16030	16030-7003	1	Valve-Float
❸16031	16031-7002	1	Float
❸16041	16041-7016	1	Shaft-Choke, Carburetor
❸16041A	16041-7018	1	Shaft-Throttle, Carburetor
❸16186	16186-7002	1	Choke Valve ASM
❸39076	39076-7001	1	Limiter
❸49121	49121-7001	1	Nozzle-Main
❸59076	59076-7005	1	Manifold-Intake
❸92009	92009-2083	1	Screw
❸92009A	92009-2349	1	Screw
❸92055	92055-2174	1	O-Ring
❸92055A	92055-7007	1	O-Ring (Id=31)
❸92063	92063-7026	1	Jet-Main, No. 88
❸92063A	92063-7028	1	Jet-Main, No. 85
❸92063B	92063-7029	1	Jet-Main, No. 82

Ref	Part No.	Qty.	Description
❸92081	92081-2234	1	Spring
❸92093	92093-2100	1	Seal
❸92093A	92093-7003	1	Seal
❸92145	92145-7015	1	Spring
❸92153	92153-7009	1	Bolt
❸92172	92172-7002	1	Screw
❸92200	92200-7014	1	Washer

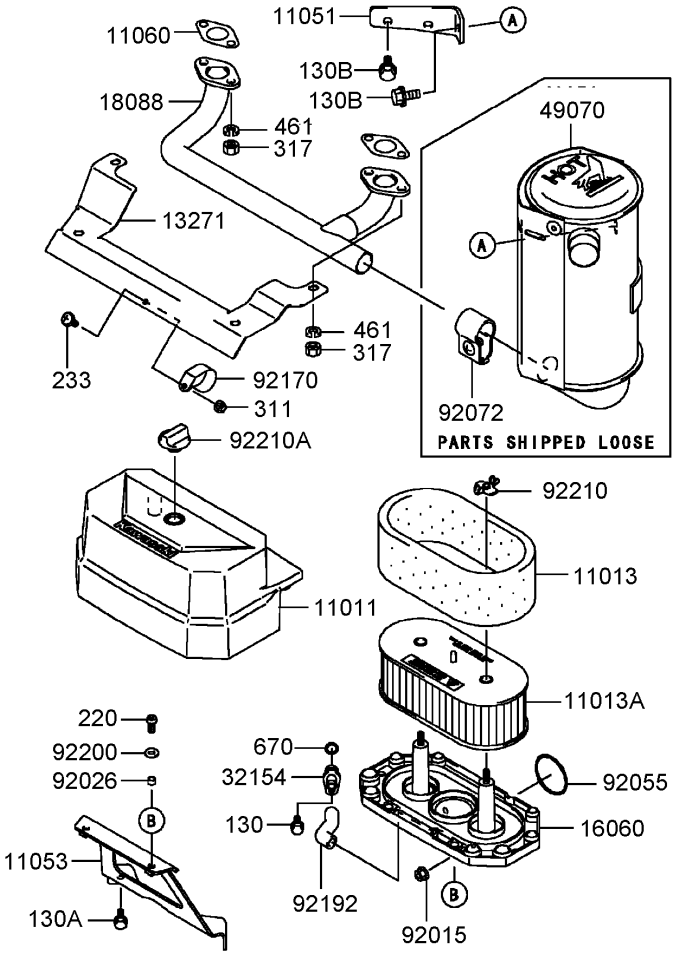

Air Filter and Muffler Assembly
Kawasaki Model FH430V-AS25

Ref	Part No.	Qty.	Description
❸11011	11011-7035	1	Case-Filter, Air
❸11013	11013-7025	1	Element-Filter, Air
❸11013A	11013-7031	1	Element-Filter, Air
❸11051	11051-7005-9H	1	Bracket
❸11053	11053-7022	1	Bracket
❸11060	11060-7021	1	Gasket-Muffler
❸13271	13271-7022	1	Plate
❸16060	16060-7016	1	Pipe-Intake
❸18088	18088-7001	1	Pipe-Exhaust
❸32154	32154-7006	1	Pipe
❸49070	49070-7015	1	Muffler
❸92015	92015-1193	1	Nut
❸92026	92026-7001	1	Spacer (6.2X7.9X5)
❸92055	92055-7015	1	Ring-O
❸92072	92072-7008	1	Band
❸92170	92170-7002	1	Clamp
❸92192	92192-7010	1	Tube
❸92200	92200-2070	1	Washer
❸92210	92210-7004	1	Nut
❸92210A	92210-7019	1	Nut
❸130	130B0610	1	Bolt-Flanged
❸130A	130B0612	1	Bolt-Flanged
❸130B	130B0816	1	Bolt-Flanged

Ref	Part No.	Qty.	Description
❸220	220B0614	1	Screw-Pan (Cross)
❸233	233B0416	1	Screw
❸311	311B0400	1	Nut-Hex
❸317	317R0800	1	Nut-Hex
❸461	461F0800	1	Washer-Spring
❸670	670B2010	1	O-Ring (10Mm)

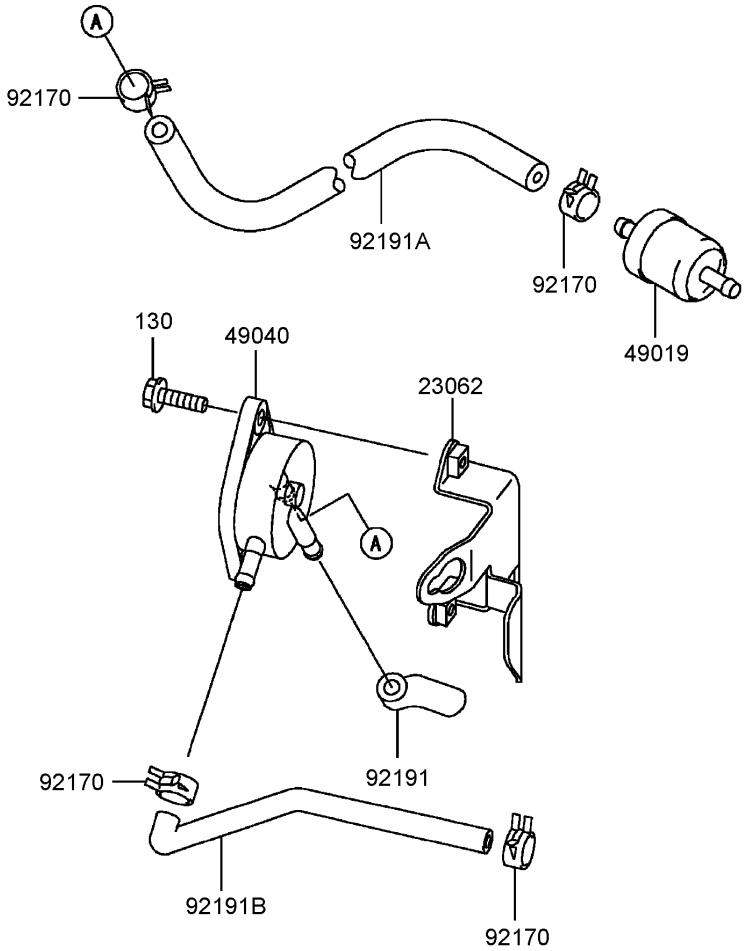

Fuel Tank and Fuel Valve Assembly
Kawasaki Model FH430V-AS25

Ref	Part No.	Qty.	Description
❸23062	23062-7004-9H	1	Bracket
❸49019	49019-7001	1	Filter-Fuel
❸49040	49040-7001	1	Pump-Fuel
❸92170	92170-2088	1	Clamp
❸92191	92191-7002	1	Tube
❸92191A	92191-7003	1	Tube (6.35X12.7X160)
❸92191B	92191-7004	1	Tube
❸130	130B0620	1	Bolt-Flanged

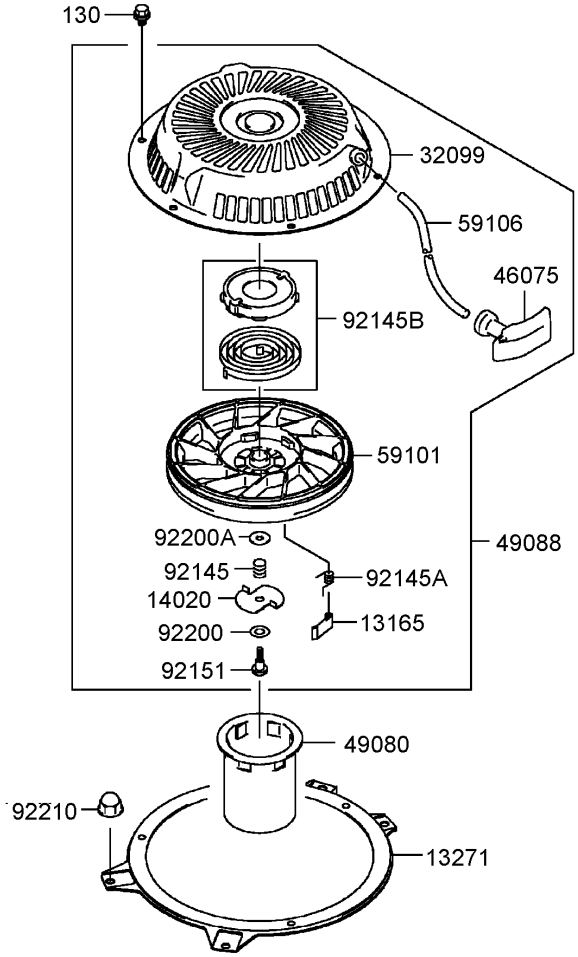

Starter Assembly
Kawasaki Model FH430V-AS25

Ref	Part No.	Qty.	Description
❸13165	13165-7001	1	Pawl-Starter, Recoil
❸13271	13271-7003-9H	1	Plate
❸14020	14020-7001	1	Retainer
❸32099	32099-7002	1	Case-Recoil, Starter
❸46075	46075-7001	1	Grip-Recoil, Starter
❸49080	49080-7001	1	Pulley-Starting
❸49088	49088-7013	1	Starter-Recoil
❸59101	59101-7001	1	Reel-Recoil
❸59106	59106-7001	1	Rope
❸92145	92145-7006	1	Spring
❸92145A	92145-7007	1	Spring
❸92145B	92145-7008	1	Spring
❸92151	92151-7008	1	Bolt
❸92200	92200-7004	1	Washer
❸92200A	92200-7005	1	Washer
❸92210	92210-0003	1	Nut
❸130	130B0608	1	Bolt-Flanged

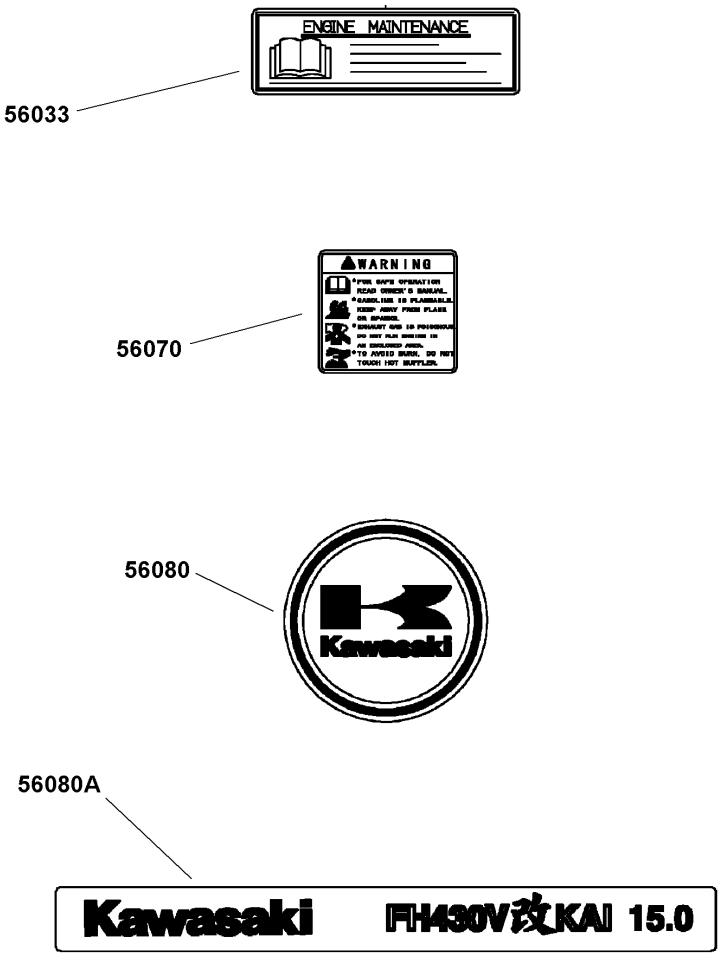

Label Assembly
Kawasaki Model FH430V-AS25

Ref	Part No.	Qty.	Description
❸56033	56033-7001	1	Label-Manual
❸56070	56070-7001	1	Label-Warning
❸56080	56080-2077	1	Label-Brand
❸56080A	56080-7024	1	Label-Brand

Attachments and Accessories

For 30684 - Commercial Walk-Behind Mower, Fixed Deck Pistol Grip Gear with 36in TURBO FORCE Cutting Unit

Product Name	Model/Part
Blade-Recycler, 18 Inch	105-7779-03
Blade-Med Flow, 18 Inch	105-7794-03
Blade-Low Flow, 18 Inch	105-7795-03
Blade-Atomic, 18 Inch	105-7796-03
36 Inch Bagger Enhancement Kit	110-2026
36 Inch Recycler Kit	110-2080
Weight Kit	110-2085
Soft Bag (3 Bushel)	30104
Sulky	30109

NOTES

NOTES

NOTES

TORO®