FORM NO. 3313-973

TORO®

MODEL NO. 20677-0000001
THRU 0002101

**PARTS CATALOG**

# 21" S.P. REAR BAGGER KEY-LECTRIC

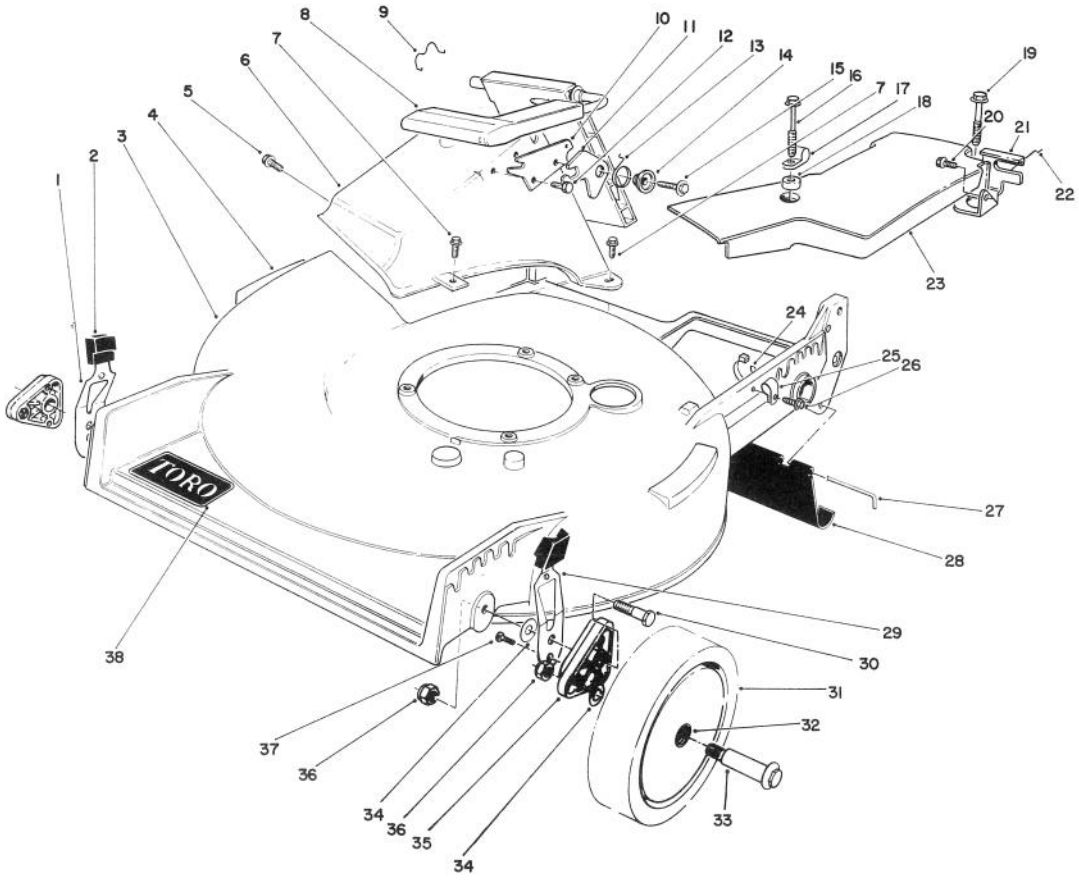


C-0418-90

## HOUSING ASSEMBLY

| Ref. No. | Part No. | Description | No. Used |
|---|---|---|---|
| 1 | 71-0560 | Spring Arm Assembly RH | 1 |
| 2 | 25-7740 | Knob — Arm | 2 |
| 3 | 13-4679 | Housing (Incl. Ref. #4 & 38) | 1 |
| 4 | 39-5770 | Decal — Danger | 1 |
| 5 | 46-6810 | Screw & Washer Assembly | 1 |
| 6 | 46-3501 | Tunnel — Discharge | 1 |
| 7 | 46-6811 | Screw — Thread Forming | 3 |
| 8 | 51-0201 | Discharge Door Assembly | 1 |
| 9 | 47-5840 | Retainer Door | 1 |
| 10 | 23-1040 | Plate — Latch | 1 |
| 11 | 42-4010 | Latch — Safety | 1 |
| 12 | 46-8090 | Hex Hd. Self-Tapping Screw | 1 |
| 13 | 33-4860 | Spring — Torsion | 1 |
| 14 | 43-4840 | Spacer — Latch | 1 |
| 15 | 46-8091 | Hex Hd. Self-Tapping Screw | 1 |
| 16 | 37-7262 | Screw — Special | 1 |
| 17 | 2412-87 | Clamp — Cable | 1 |
| 18 | 3-5792 | Washer | 1 |
| 19 | 37-7260 | Screw — Special | 1 |
| 20 | 32144-70 | Screw — Thread Forming | 1 |

| Ref. No. | Part No. | Description | No. Used |
|---|---|---|---|
| 21 | 62-3940 | Bracket — Traction Adjustment | 1 |
| 22 | 46-7030 | Retainer — Cable | 1 |
| 23 | 62-4314 | Cover — Belt | 1 |
| 24 | 3290-378 | Cable Tie | 1 |
| 25 | 2412-83 | R-Clamp | 1 |
| 26 | 12-5450 | Screw — Self-Tapping | 1 |
| 27 | 33-3208 | Rod — Shield | 1 |
| 28 | 44-0580 | Shield — Trailing | 1 |
| 29 | 71-0570 | Spring Arm Assembly LH | 1 |
| 30 | 66-0561 | Screw — Pivot | 2 |
| 31 | 11-9509 | Wheel & Tire Assembly (Incl. Ref. #32) | 2 |
| 32 | 27-6250 | Bushing | 4 |
| 33 | 27-6231 | Bolt — Wheel | 2 |
| 34 | 40-1940 | Washer — Wheel Bolt | 4 |
| 35 | 66-0580 | Arm — Pivot | 2 |
| 36 | 52-3620 | Locknut | 4 |
| 37 | 32144-85 | Screw — Thread Forming | 2 |
| 38 | 71-0600 | Decal — Toro | 1 |

©The TORO Company — 1989

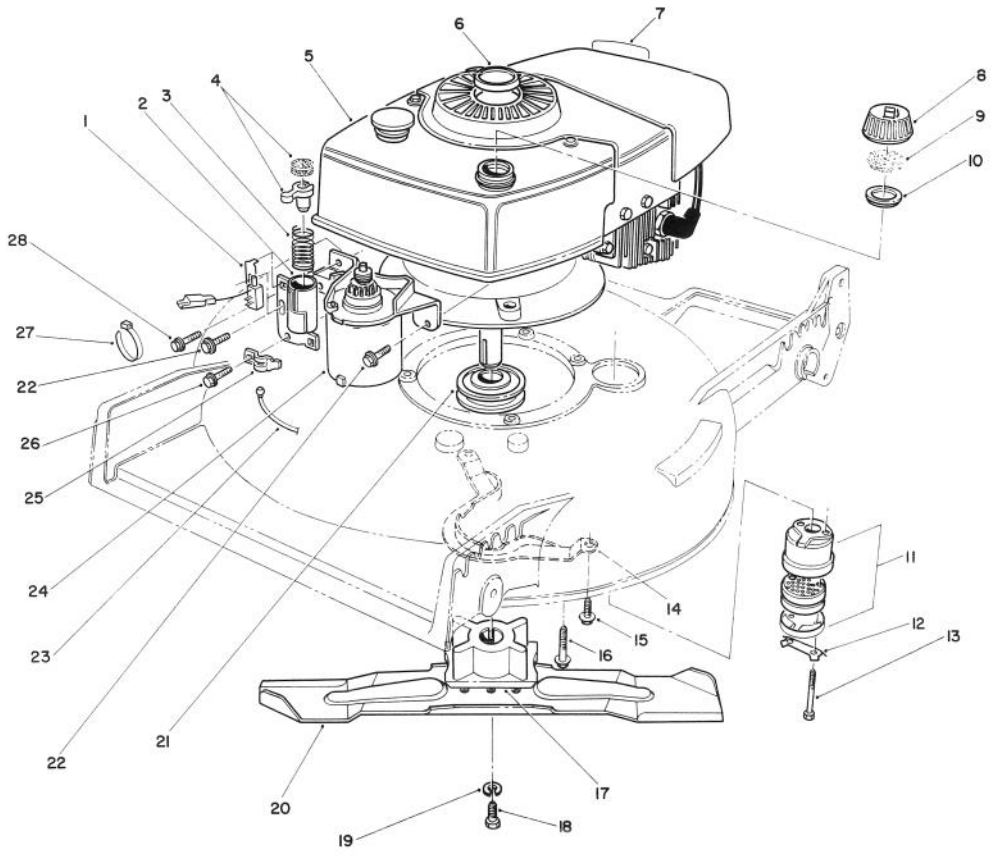


C-0419-90

# ENGINE ASSEMBLY

| Ref. No. | Part No. | Description | No. Used |
|---|---|---|---|
| 1 | 47-6530 | Switch — Push Button | 1 |
| 2 | 46-5840 | Tube Assembly | 1 |
| 3 | 47-2180 | Spring — Compression | 1 |
| 4 | 47-7350 | Plunger & Pad Assembly | 1 |
| 5 | | Engine | 1 |
| 6 | 38-1480 | Plug — Button | 1 |
| 7 | 37-1580 | Decal — Maintenance | 1 |
| 8 | 42-0682 | Gas Cap (Incl. Ref. #9 & 10) | 1 |
| 9 | 2210-144 | Gasket — Gas Cap | 1 |
| 10 | 2210-143 | Baffle — Gas Cap | 1 |
| 11 | 5-4769 | Muffler Assembly (Incl. Ref. #12 & 13) | 1 |
| 12 | 3-5094 | Clip — Locking | 1 |
| 13 | 321-20 | Hex Hd. Capscrew | 2 |
| 14 | 40-5720 | Guide — Belt | 1 |

| Ref. No. | Part No. | Description | No. Used |
|---|---|---|---|
| 15 | 49-2040 | Screw — Thread Forming | 2 |
| 16 | 11-0581 | Screw — Thread Forming | 3 |
| 17 | 62-7540 | Retainer — Blade | 1 |
| 18 | 26-0670 | Screw — Blade | 1 |
| 19 | 3253-22 | Lockwasher | 1 |
| 20 | 42-1000 | Blade | 1 |
| 21 | 62-7550 | Pulley — Driver | 1 |
| 22 | 12-3270 | Screw — Thread Forming | 2 |
| 23 | 43-4530 | Cable — Brake | 1 |
| 24 | 49-4210 | Starter Motor Assembly | 1 |
| 25 | 46-6530 | Clamp — Cable | 1 |
| 26 | 12-5450 | Screw — Self-Tapping | 1 |
| 27 | 3290-378 | Tie — Cable | 1 |
| 28 | 11-9760 | Screw — Special | 1 |

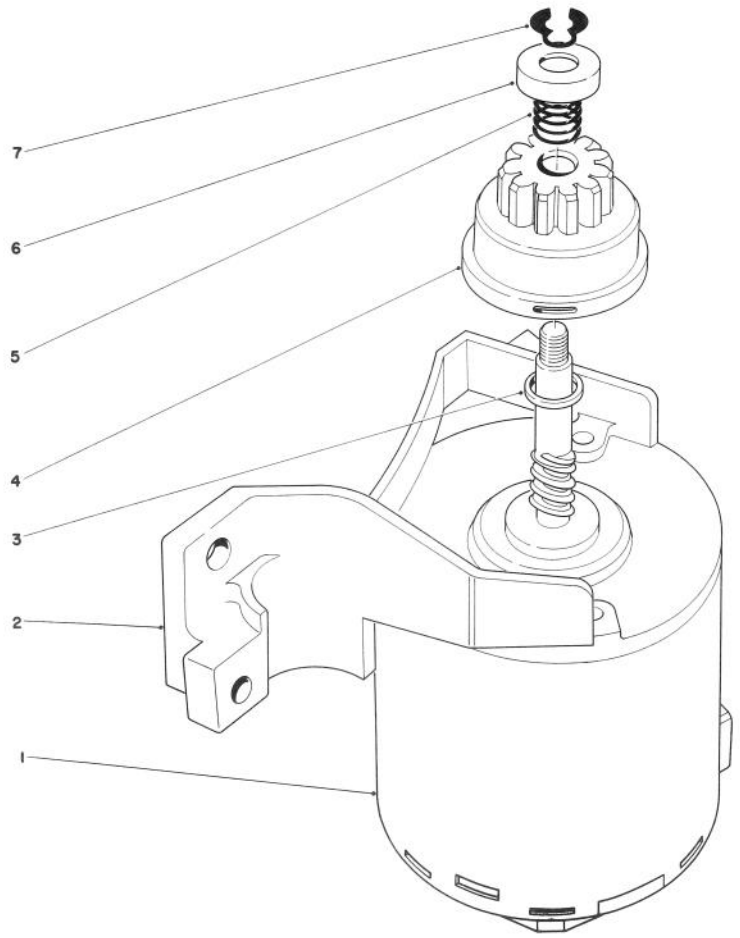


C-0259-90

# STARTER ASSEMBLY

| Ref. No. | Part No. | Description | No. Used |
|---|---|---|---|
| 1 | 218-543 | End Frame w/Brushes & Electrical Terminal | 1 |
| 2 | 218-541 | End Frame w/Bushing | 1 |
| 3 | 23-9591 | Spacer | 1 |
| 4 | 43-4370 | Pinion Assembly | 1 |

| Ref. No. | Part No. | Description | No. Used |
|---|---|---|---|
| 5 | 44-0500 | Spring - Compression | 1 |
| 6 | 49-2170 | Stop - Pinion | 1 |
| 7 | 32151-47 | Ring - Retaining External | 1 |
| * | 49-4210 | Starter Assembly (Incl. Ref. # 1-7) | 1 |

* Not Illustrated

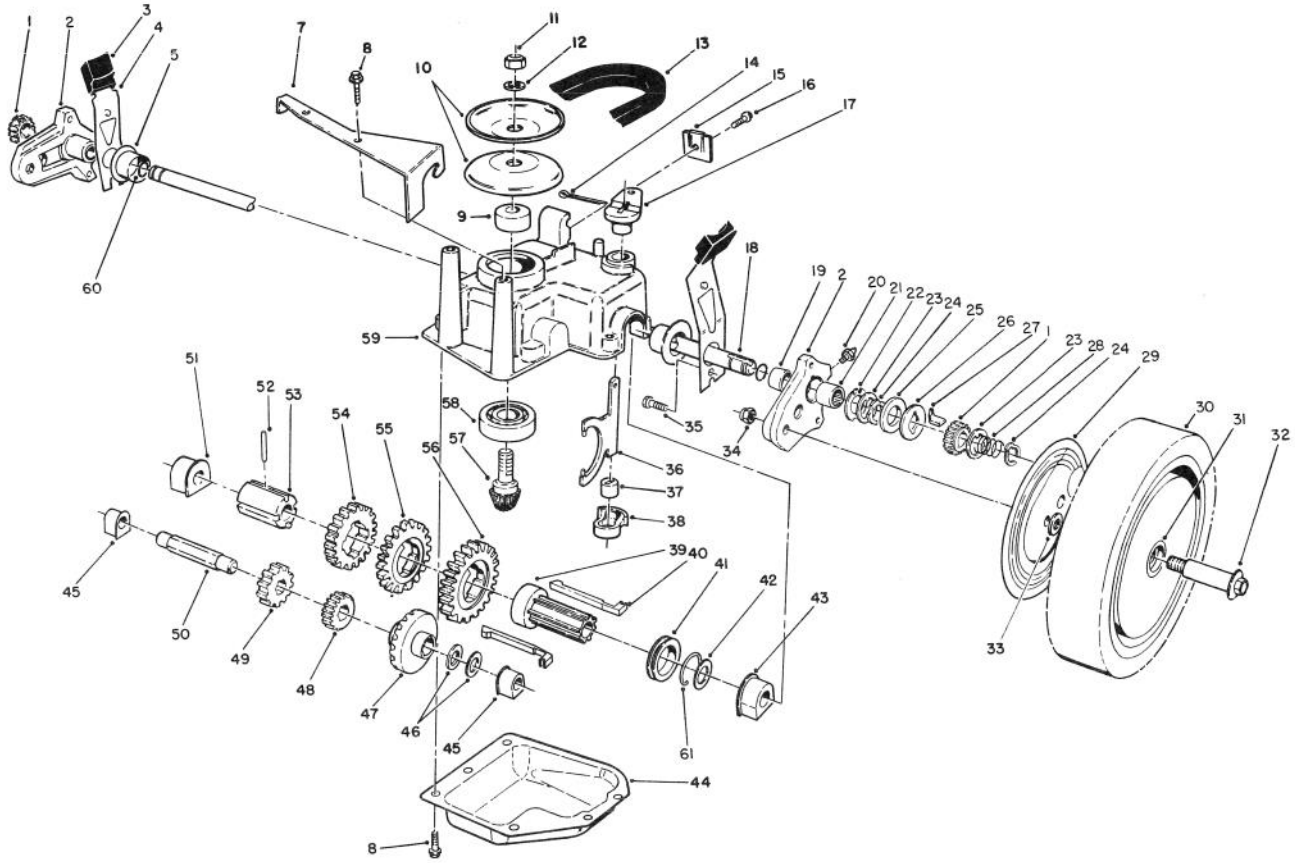

C-0371-90

# GEAR CASE ASSEMBLY

| Ref. No. | Part No. | Description | No. Used |
|---|---|---|---|
| 1 | 65-4750 | Pinion | 2 |
| 2 | 63-8700 | Pivot Arm Assembly (Incl. Ref # 19, 20, & 21) | 2 |
| 3 | 25-7740 | Knob - Arm | 2 |
| 4 | 63-8720 | Spring Arm Assembly | 2 |
| 5 | 42-3520 | End Cap | 2 |
| 7 | 62-4320 | Bracket - Belt Guide | 1 |
| 8 | 49-2040 | Screw - Self Tapping | 8 |
| 9 | 62-6660 | Spacer | 1 |
| 10 | 60-8840 | Pulley - Half | 2 |
| 11 | 3296-5 | Locknut | 1 |
| 12 | 3256-24 | Washer - Flat | 1 |
| 13 | 62-3900 | V-Belt | 1 |
| 14 | 3272-10 | Pin - Cotter | 1 |
| 15 | 46-5610 | Cable Clamp | 1 |
| 16 | 32144-70 | Screw - Thread Forming | 1 |
| 17 | 60-8820 | Lever - Shift | 1 |
| 18 | 65-4770 | Shaft - Output | 1 |
| 19 | 47-2890 | Bushing | 2 |
| 20 | 302-56 | Fitting - Grease | 2 |
| 21 | 48-2060 | Needle Bearing | 2 |
| 22 | 65-4730 | Thrust Washer | 2 |
| 23 | 65-4740 | Thrust Washer | 4 |
| 24 | 65-2720 | Ring - Retaining | 4 |
| 25 | 65-4710 | Ring - Friction | 2 |

| Ref. No. | Part No. | Description | No. Used |
|---|---|---|---|
| 26 | 65-4760 | Washer - Clutch | 2 |
| 27 | 66-6050 | Key - Rocker L.H. | 1 |
| * | 66-6040 | Key - Rocker R.H. | 1 |
| 28 | 65-4720 | Spring | 2 |
| 29 | 63-5270 | Cover - Wheel | 2 |
| 30 | 11-9519 | Wheel - Tire & Gear Ass'y (Incl. Ref. # 31) | 2 |
| 31 | 27-6250 | Bushing - Wheel | 4 |
| 32 | 27-6231 | Wheel Bolt | 2 |
| 33 | 40-1940 | Washer - Wheel Bolt | 4 |
| 34 | 52-3620 | Locknut | 2 |
| 35 | 32144-85 | Screw | 2 |
| 36 | 60-8870 | Yoke - Shift | 1 |
| 37 | 29-9570 | Bushing - Yoke | 1 |
| 38 | 60-8810 | Retainer - Shift Fork | 1 |
| 39 | 74-3620 | Sleeve - Shift Key | 1 |
| 40 | 65-5230 | Key - Shift | 2 |
| 41 | 60-8760 | Collar - Shift | 1 |
| 42 | 36-4780 | Washer - Thrust | 1 |
| 43 | 60-8770 | Bushing - Output Shaft | 1 |
| 44 | 60-8730 | Cover - Gear Case | 1 |
| 45 | 60-8750 | Bushing - Int. Shaft | 2 |
| 46 | 36-4791 | Washer - Thrust | 2 |
| 47 | 55-3760 | Gear - Pinion 15 Tooth | 1 |
| 48 | 55-3780 | Gear - Pinion 20 Tooth | 1 |

* Not Illustrated

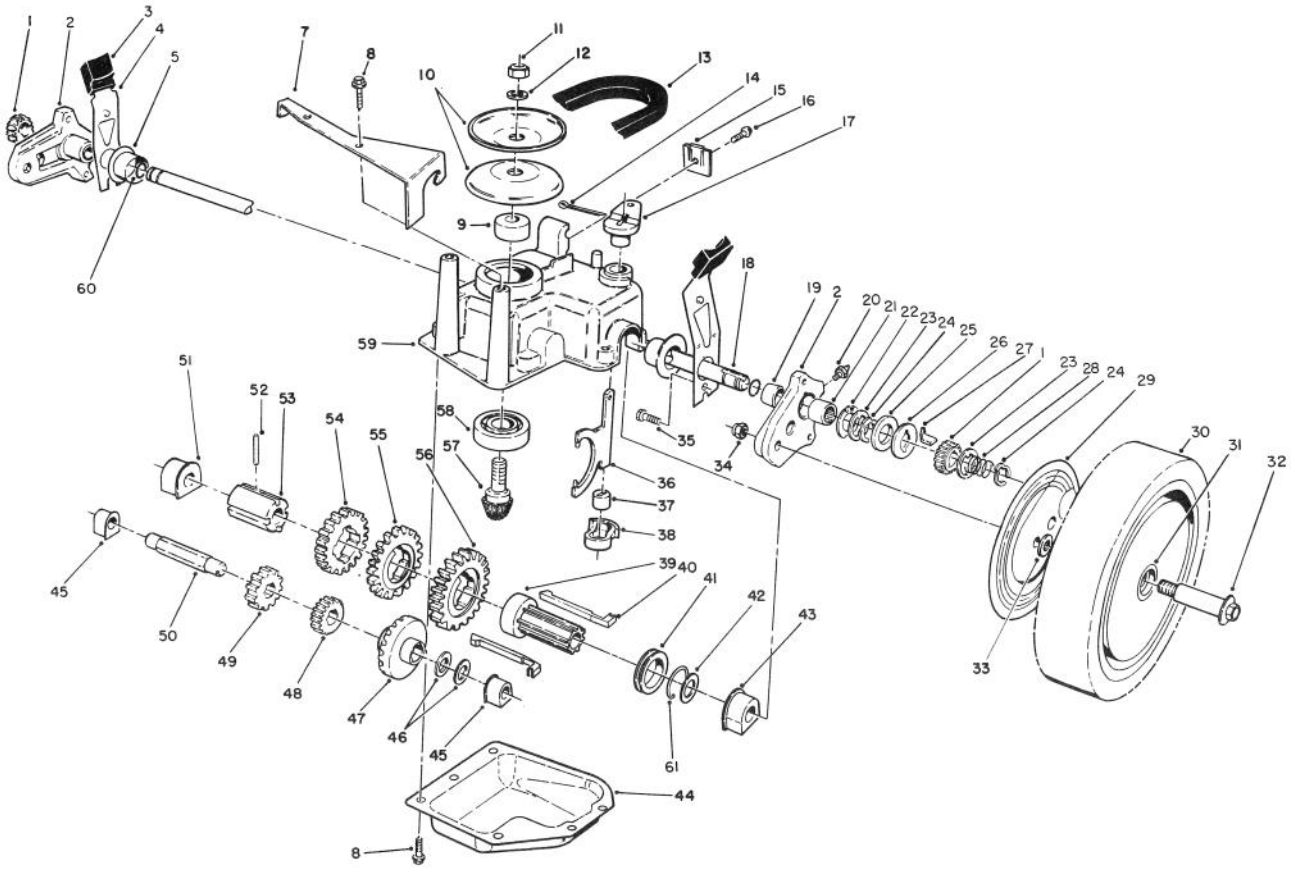

C-0371-90

# GEAR CASE ASSEMBLY (Continued)

| Ref. No. | Part No. | Description | No. Used |
|---|---|---|---|
| 49 | 55-3800 | Gear - Pinion | 1 |
| 50 | 60-8800 | Shaft - Intermediate | 1 |
| 51 | 60-8850 | Bushing - Output Shaft | 1 |
| 52 | 32121-120 | Pin - Coil | 1 |
| 53 | 60-8790 | Sleeve - Gear | 1 |
| 54 | 55-3810 | Gear - 39 Tooth 3rd Gear | 1 |
| 55 | 55-3790 | Gear - 44 Tooth 2nd Gear | 1 |

| Ref. No. | Part No. | Description | No. Used |
|---|---|---|---|
| 56 | 55-3770 | Gear - 49 Tooth 1st Gear | 1 |
| 57 | 60-8890 | Pinion - Bevel | 1 |
| 58 | 38-7820 | Bearing - Ball | 1 |
| 59 | 60-8710 | Gear Case - Upper | 1 |
| 60 | 237-153 | O-Ring | 2 |
| 61 | 65-5250 | Clip - Spring | 1 |
| * | 62-6673 | Gear Case Assembly | 1 |

* Not Illustrated

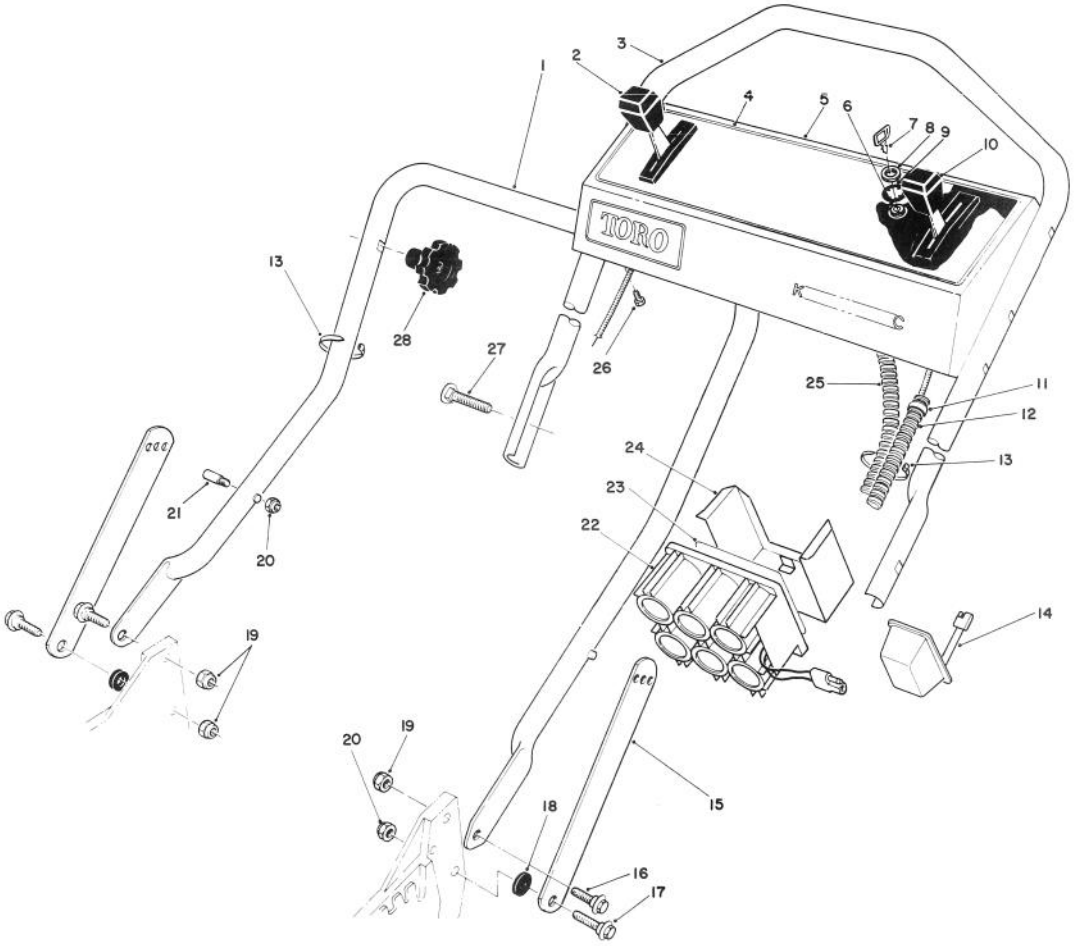


C-0420-90

# HANDLE ASSEMBLY

| Ref. No. | Part No. | Description | No. Used |
|---|---|---|---|
| 1 | 43-1361 | Lower Handle Assembly | 1 |
| 2 | 46-5431 | Control — Ground Speed (Bend Type #1) (Sheath Lg. 42¼ inch, 107.3 cm.) (Wire Lg. 2⅜ inch, 60 cm.) | 1 |
| 3 | 46-5411 | Handle — Upper | 1 |
| 4 | 70-2650 | Decal — Instruction Panel | 1 |
| 5 | 13-6529 | Panel — Control | 1 |
| 6 | 46-5780 | Switch — Starter (Incl. Ref. #7-9) | 1 |
| 7 | 63-8360 | Key | 1 |
| 8 | 218-461 | Hex Nut | 1 |
| 9 | 3254-5 | Lockwasher | 1 |
| 10 | 67-9814 | Control — Throttle (Sheath Lg. 55½ inch, 140.9 cm.) (Wire Lg. 2⅛ inch, 5.4 cm.) | 1 |

| Ref. No. | Part No. | Description | No. Used |
|---|---|---|---|
| 11 | 2412-50 | Clip — Convoluted Tubing | 4 |
| 12 | 46-6440 | Cover — Control Cable | 1 |
| 13 | 3290-378 | Tie — Cable | 4 |
| 14 | 6-9780 | Battery Charger Assembly | 1 |
| 15 | 43-1370 | Latch — Handle | 2 |
| 16 | 27-7211 | Screw — Shoulder | 2 |
| 17 | 27-7210 | Screw — Shoulder | 2 |
| 18 | 3-3287 | Spacer — Handle Latch | 2 |
| 19 | 3296-29 | Locknut | 3 |
| 20 | 3296-47 | Locknut | 3 |
| 21† | 49-2750 | Pin — Handle | 2 |
| 22 | 55-7520 | Battery Assembly | 1 |
| 23 | 55-8190 | Decal — Charging Instructions | 1 |
| 24 | 55-8180 | Retainer — Battery | 1 |
| 25 | 46-5812 | Harness — Wire | 1 |
| 26 | 32104-76 | Screw — Tapping | 5 |
| 27 | 17-9421 | Screw — Handle | 2 |
| 28 | 19-4050 | Knob — Handle Release | 2 |

† Service Replacement Parts

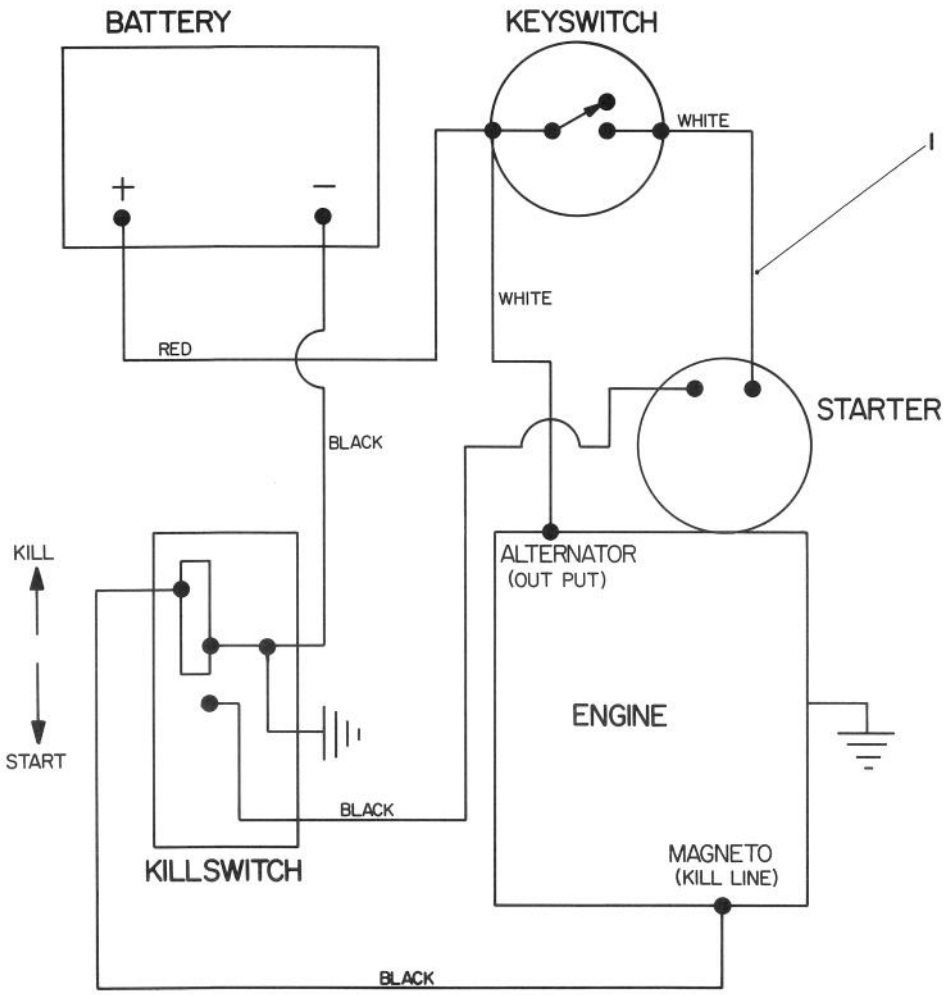


# ELECTRICAL SCHEMATIC

| Ref. No. | Part No. | Description | No. Used |
|---|---|---|---|
| 1 | 46-5812 | Harness — Wire | 1 |

| Ref. No. | Part No. | Description | No. Used |
|---|---|---|---|

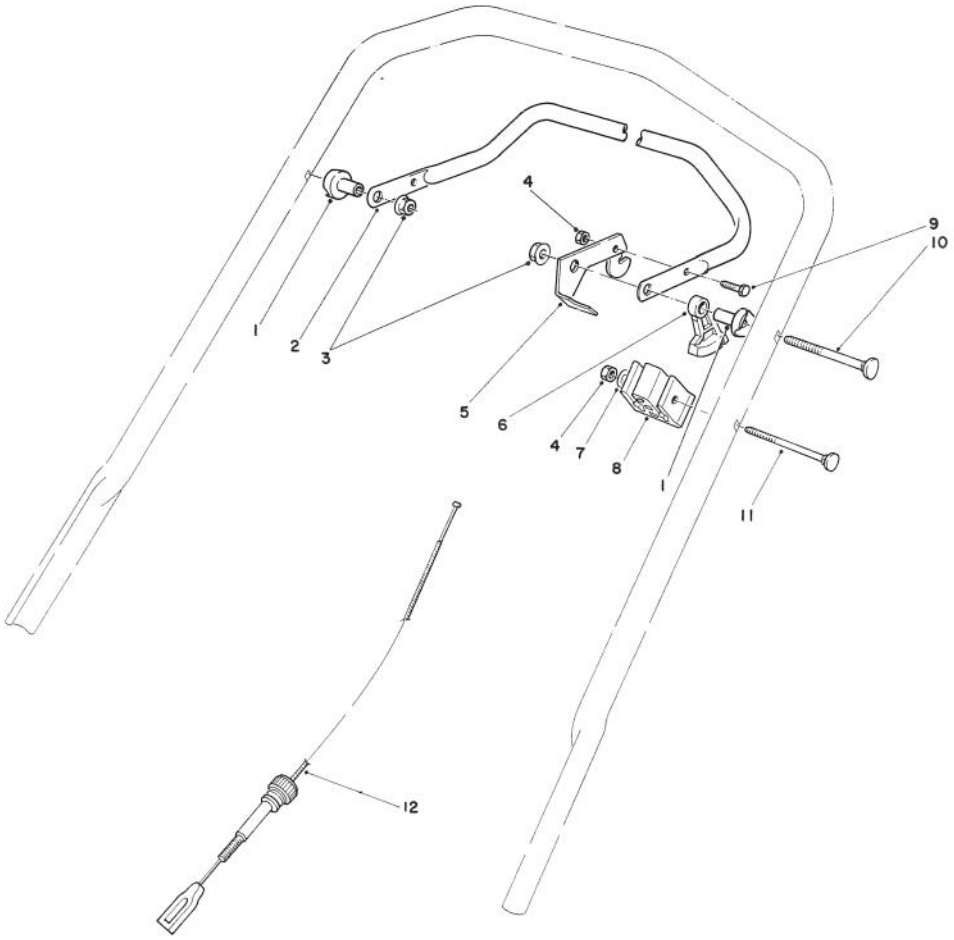


C-0423-90

# TRACTION CONTROL ASSEMBLY

| Ref. No. | Part No. | Description | No. Used |
|---|---|---|---|
| 1 | 49-1630 | Support — Spacer | 2 |
| 2 | 52-7430 | Control Bar | 1 |
| 3 | 3296-58 | Nut — Flange Lock | 2 |
| 4 | 3296-42 | Locknut | 2 |
| 5 | 66-5350 | Lever — Control | 1 |
| 6 | 46-5520 | Lever — Traction | 1 |

| Ref. No. | Part No. | Description | No. Used |
|---|---|---|---|
| 7 | 3256-22 | Washer | 1 |
| 8 | 46-6980 | Support — Cable | 1 |
| 9 | 321-3 | Hex Hd. Capscrew | 1 |
| 10 | 17-9421 | Screw — Handle | 2 |
| 11 | 46-6434 | Screw — Handle | 1 |
| 12 | 46-5481 | Cable — Traction | 1 |

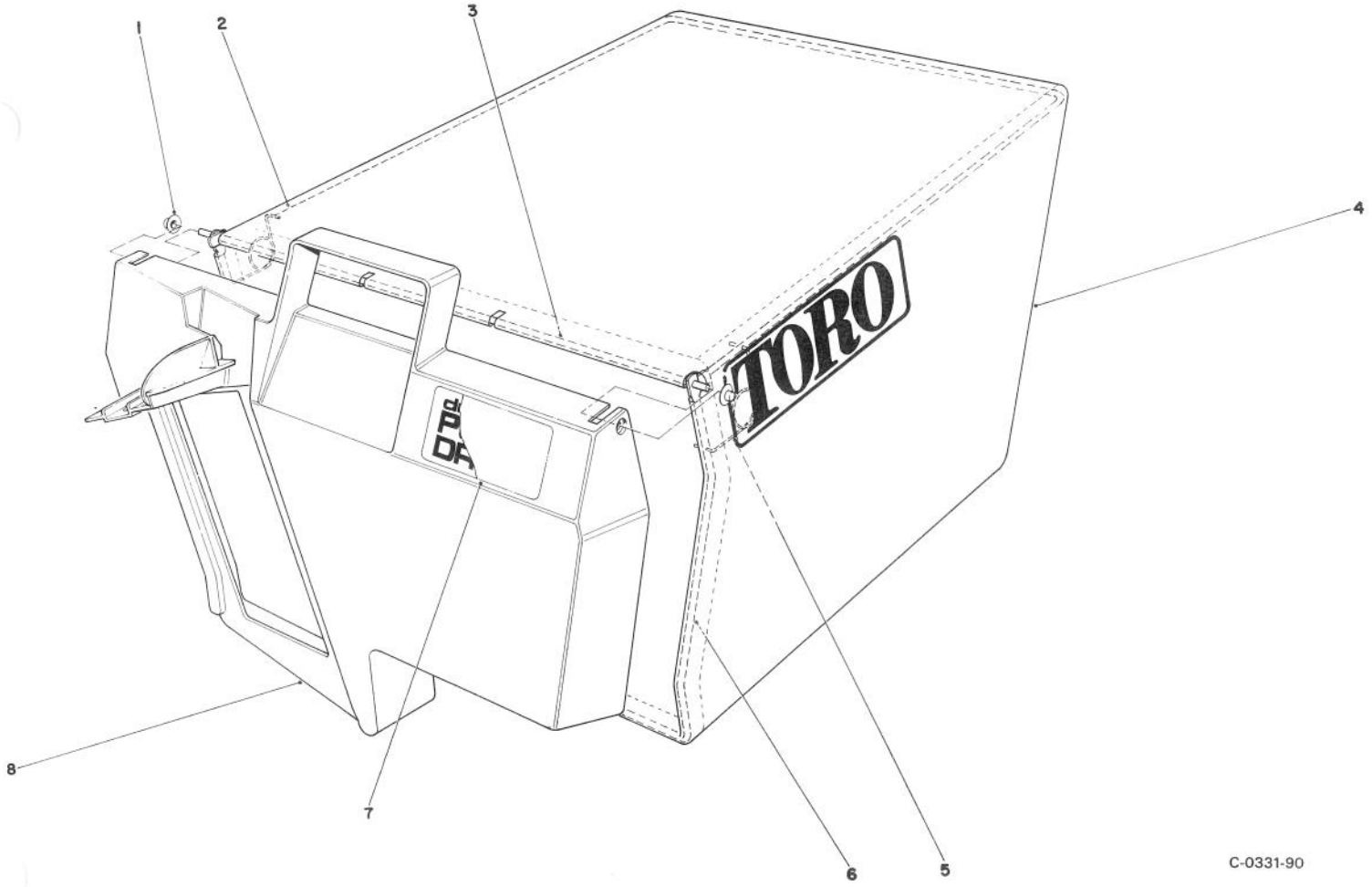


C-0331-90

# GRASS BAG ASSEMBLY NO. 43-0018

| Ref. No. | Part No. | Description | No. Used |
|---|---|---|---|
| 1 | 3290-422 | Nut – Push | 2 |
| 2 | 42-4030 | Bag Frame – Upper | 1 |
| 3 | 33-4820 | Hinge – Bag Door | 1 |
| 4 | 8-2759 | Bag – Grass | 1 |

| Ref. No. | Part No. | Description | No. Used |
|---|---|---|---|
| 5 | 36-6910 | Spring | 2 |
| 6 | 42-4020 | Frame – Bag | 1 |
| 7 | 66-2150 | Decal – Bag Door | 1 |
| 8 | 37-1393 | Door – Grass Bag | 1 |

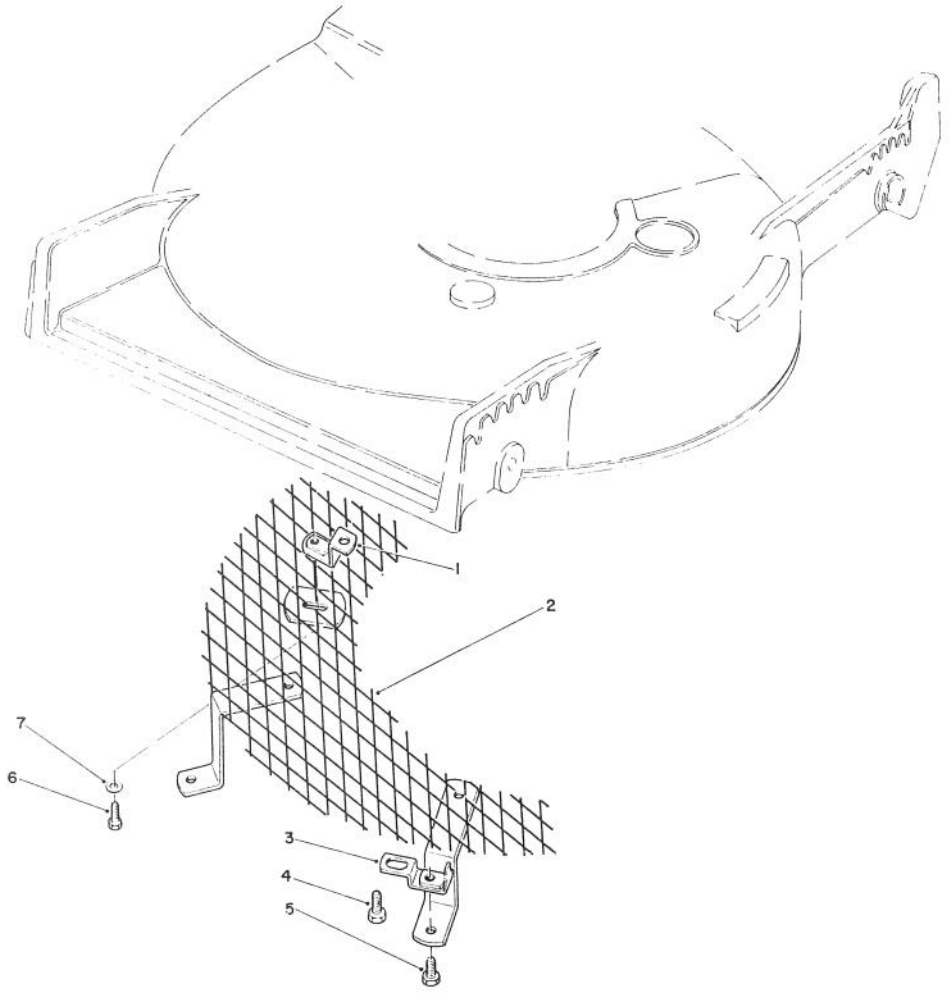


C-0302-90

# LEAF SHREDDER KIT MODEL NO. 59157 (Optional)

| Ref. No. | Part No. | Description | No. Used |
|---|---|---|---|
| 1 | 47-6260 | Bracket | 1 |
| 2 | 47-6230 | Screen | 1 |
| 3 | 46-4880 | Bracket - Mounting | 2 |
| 4 | 32144-11 | Self Tapping Screw | 3 |

| Ref. No. | Part No. | Description | No. Used |
|---|---|---|---|
| 5 | 321-3 | Hex Hd. Capscrew | 2 |
| 6 | 321-5 | Hex Hd. Capscrew | 1 |
| 7 | 3256-1 | Washer | 1 |

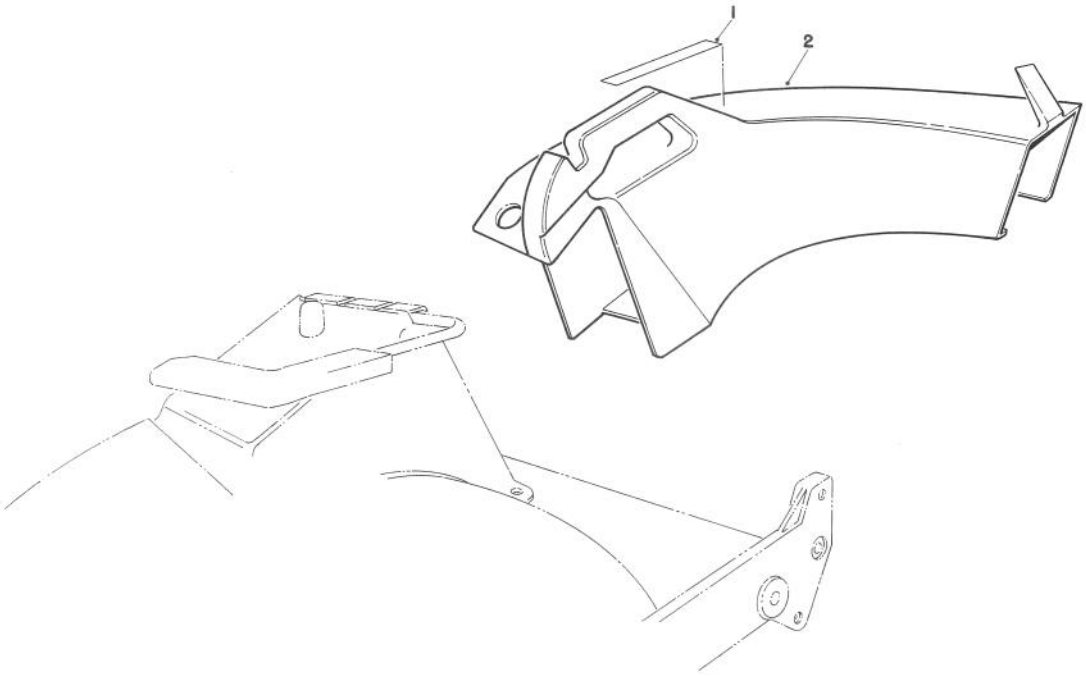


T-0716-90

# SIDE DISCHARGE CHUTE MODEL NO. 59168 (Optional)

| Ref. No. | Part No. | Description | No. Used |
|---|---|---|---|
| 1 | 39-9120 | Decal - Caution | 1 |
| 2 | 13-2239 | Chute - Discharge (Incl Ref. # 1) | 1 |

| Ref. No. | Part No. | Description | No. Used |
|---|---|---|---|
| | | | |

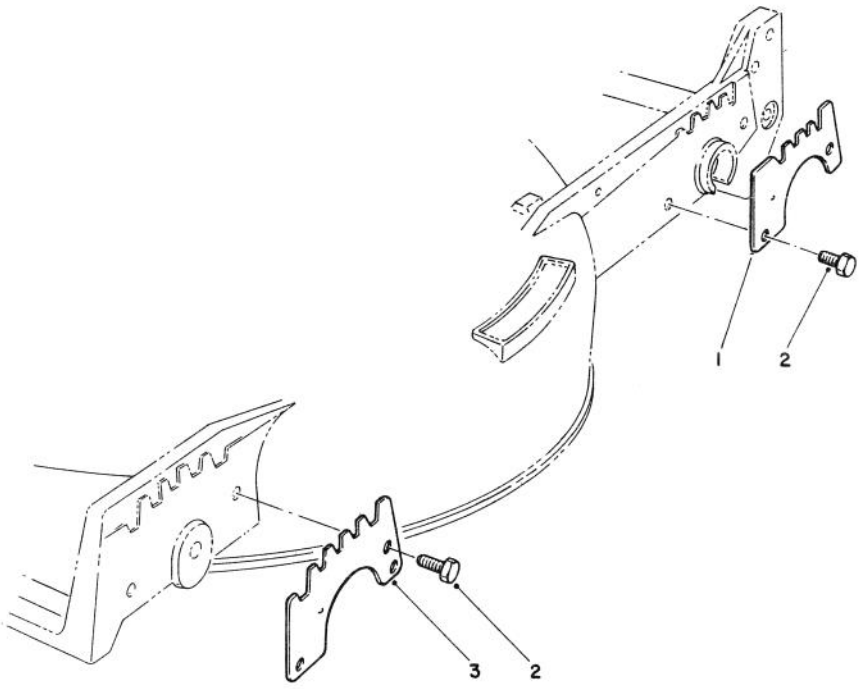


C-0332-90

# WEAR PLATE MODEL NO. 49-4080 (Optional)

| Ref. No. | Part No. | Description | No. Used |
|---|---|---|---|
| 1 | 49-4070 | Plate - Rear Wear | 2 |
| 2 | 32104-17 | Thread Forming Screw | 8 |

| Ref. No. | Part No. | Description | No. Used |
|---|---|---|---|
| 3 | 43-5050 | Plate - Wear Front | 2 |

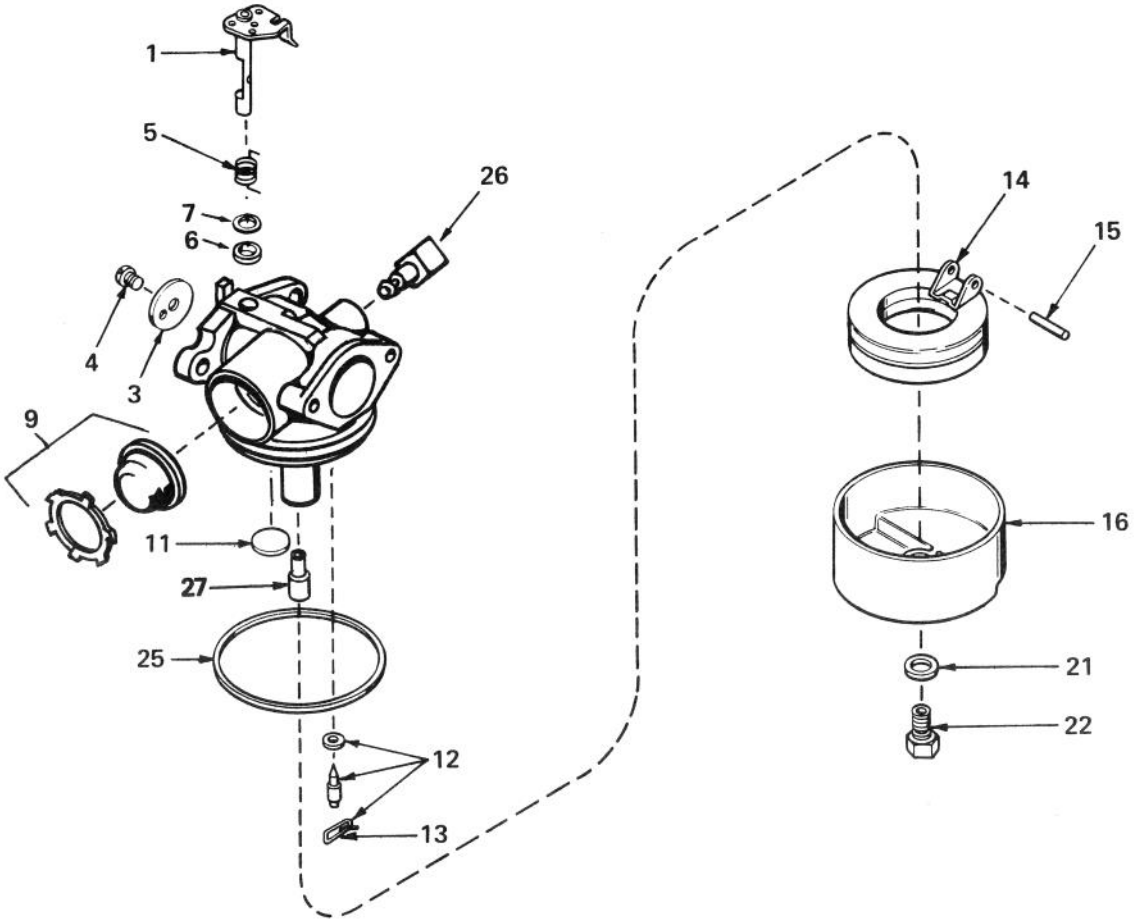


# CARBURETOR NO. 632050A

| Ref. No. | Part No. | Description | No. Used |
|---|---|---|---|
| 1 | 631615 | Shaft & Lever Assy., Throttle | 1 |
| 3 | 631616 | Shutter, Throttle | 1 |
| 4 | 650506 | Screw, Throttle Shutter | 1 |
| 5 | 631767 | Spring, Throttle Return | 1 |
| 6 | 631971 | Seal, Dust | 1 |
| 7 | 631184 | Washer, Flat | 1 |
| 9 | 632047 | Bulb & Retainer, Primer | 1 |
| 11 | 631027 | Plug, Welch | 1 |
| 12 | 631021 | Inlet Needle, Seat & Clip Assy. (Incl. Ref. #13) | 1 |

| Ref. No. | Part No. | Description | No. Used |
|---|---|---|---|
| 13 | 631022 | Clip, Inlet Needle | 1 |
| 14 | 632019 | Float, Carburetor | 1 |
| 15 | 631024 | Shaft, Float | 1 |
| 16 | 631700 | Bowl, Float | 1 |
| 21 | 631334 | Gasket, Bowl-to-body | 1 |
| 22 | 631935 | Nut, Float bowl | 1 |
| 25 | 631028 | Gasket, Bowl-to-body | 1 |
| 26 | 631807 | Fitting, Fuel Inlet | 1 |
| 27 | 632158 | Spacer | 1 |

# ENGINE TECUMSEH MODEL NO. TNT 100-10104F

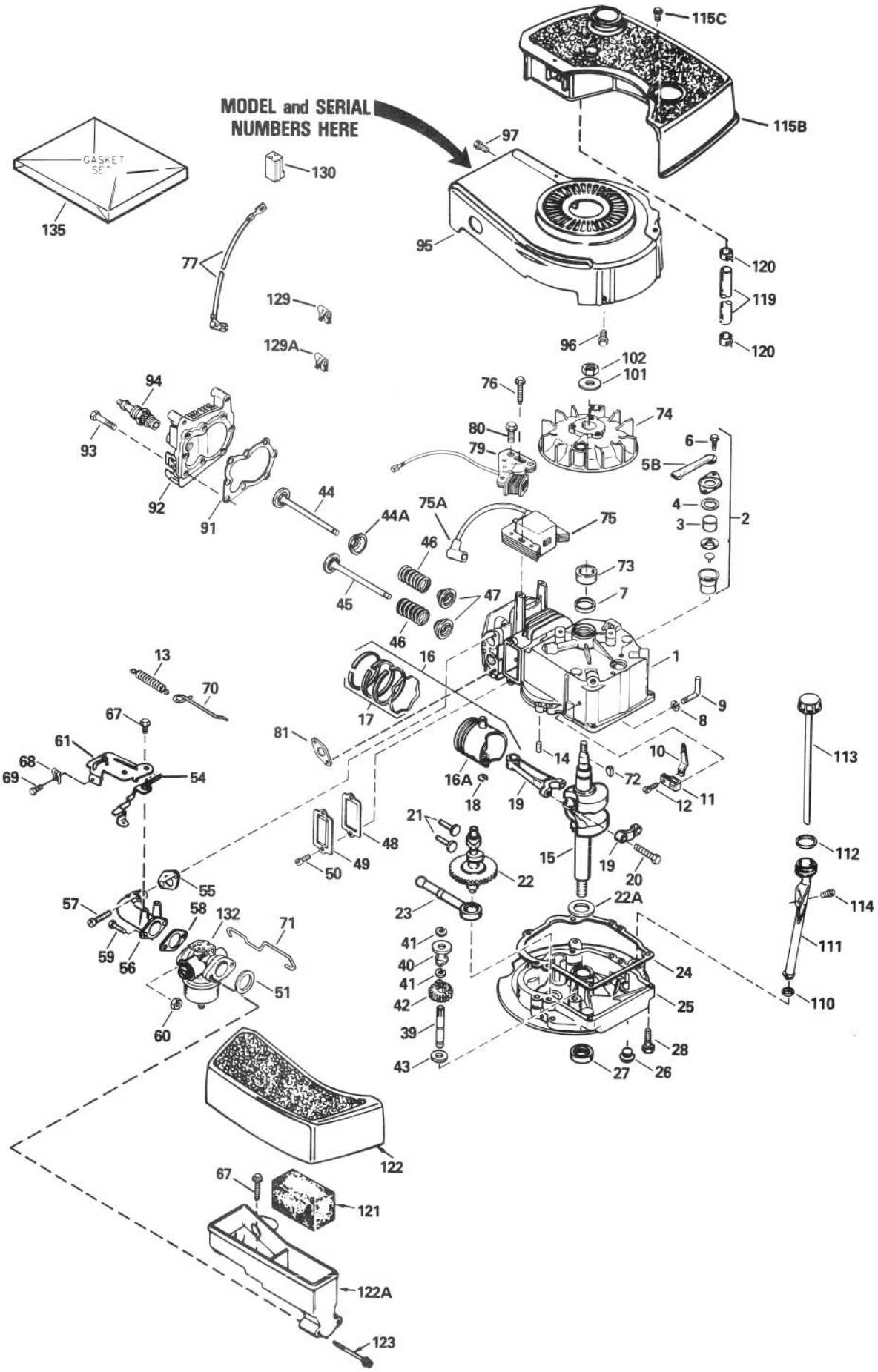

# ENGINE TECUMSEH MODEL NO. TNT 100-10104F

| Ref. No. | Part No. | Description | No. Used |
|---|---|---|---|
| 1 | 34429A | Cylinder Assy. (Incl. Ref. #6 & 14) | 1 |
| 2 | 34214A | Breather Assy. (Incl. Ref. #3-6 & 129) | 1 |
| 3 | 33734 | Element, Breather | 1 |
| 4 | *33735 | Gasket, Breather | 1 |
| 5B | 33886 | Tube, Breather | 1 |
| 6 | 30200 | Screw, Hex Washer Hd. Self-Tap | 2 |
| 7 | 32600 | Seal, Oil | 1 |
| 8 | 28277 | Washer, Flat | 1 |
| 9 | 30589 | Rod, Governor (Incl. Ref. #8) | 1 |
| 10 | 32651 | Lever, Governor | 1 |
| 11 | 31335 | Clamp, Governor Lever | 1 |
| 12 | 650548 | Screw, Hex Washer Hd. | 1 |
| 13 | 33890 | Spring, Extension | 1 |
| 14 | 26727 | Pin, Dowel | 2 |
| 15 | 35482 | Crankshaft Assy. | 1 |
| 16 | 35544 | Piston, Pin & Ring Assy. (STD.) (Incl. Ref. #16A, 17 & 18) | 1 |
| 16 | 35545 | Piston, Pin & Ring Assy. (.010 oversize) (Incl. Ref. #16A, 17 & 18) | 1 |
| 16 | 35546 | Piston, Pin & Ring Assy. (.020 oversize) (Incl. Ref. #16A, 17 & 18) | 1 |
| 16A | 35541 | Piston & Pin Assy. (Std.) (Incl. Ref. #18) | 1 |
| 16A | 35542 | Piston & Pin Assy. (.010 oversize) (Incl. Ref. #18) | 1 |
| 16A | 35543 | Piston & Pin Assy. (.020 oversize) (Incl. Ref. #18) | 1 |
| 17 | 35547 | Ring Set, Piston (Std.) | 1 |
| 17 | 35548 | Ring Set, Piston (.010 oversize) | 1 |
| 17 | 35549 | Ring Set, Piston (.020 oversize) | 1 |
| 18 | 20381 | Ring, Piston Pin Retaining | 1 |
| 19 | 30963B | Rod Assy., Connecting (Incl. Ref. #20) | 1 |
| 20 | 32610A | Bolt, Connecting Rod | 2 |
| 21 | 27241 | Valve, Lifter | 2 |
| 22 | 33553 | Camshaft (Mech. Compression Release) | 1 |
| 22A | 32323 | Washer, Thrust | 1 |
| 23 | 29914 | Pump Assy., Oil | 1 |
| 24 | *35261 | Gasket, Mounting Flange | 1 |
| 25 | 34311B | Flange, Mounting (Incl. Ref. #26, 27 & 39) | 1 |
| 26 | 27244 | Plug, Oil Drain | 1 |
| 27 | 27897 | Seal, Oil | 1 |
| 28 | 650488 | Screw, Hex Hd. | 6 |
| 39 | 30574 | Shaft, Governor | 1 |
| 40 | 30588A | Spool, Governor | 1 |
| 41 | 29193 | Ring, Retaining | 2 |
| 42 | 30591 | Gear Assy., Governor (Incl. Ref. #43) | 1 |
| 43 | 35479 | Washer, Flat | 1 |
| 44 | 29314B | Valve, Intake (Std.) (Incl. Ref. #47) | 1 |
| 44 | 29315C | Valve, Intake (1/32" oversize) (Incl. Ref. #47) | 1 |
| 44A | 35390 | Seal Assy., Intake Valve | 1 |
| 45 | 29313C | Valve, Exhaust (Std.) (Incl. Ref. #47) | 1 |
| 45 | 29315C | Valve, Exhaust (1/32" oversize) (Incl. Ref. #47) | 1 |
| 46 | 31672 | Spring, Valve | 2 |
| 47 | 31673 | Cap, Lower Valve Spring | 2 |
| 48 | *27234A | Gasket, Valve Spring Box | 1 |
| 49 | 32755 | Cover, Valve Spring Box | 1 |
| 50 | 650128 | Screw, Hex Hd. | 2 |
| 51 | *33051 | Gasket, Air Cleaner | 1 |
| 54 | 34310 | Lever, RPM Adjusting | 1 |
| 55 | *34690A | Gasket, Intake Pipe | 1 |
| 56 | 33004A | Pipe, Intake (Incl. Ref. #55) | 1 |
| 57 | 650451 | Screw, Hex Hd. | 2 |
| 58 | *31688A | Gasket, Carburetor | 1 |
| 59 | 6201 | Screw, Hex Hd. | 2 |
| 60 | 29752 | Nut & Lockwasher | 2 |
| 61 | 33889A | Bracket Assy., Control (Incl. Ref. #54 & 67) | 1 |
| 67 | 650804 | Screw, Hex Washer Hd. Shoulder, Self-Tap | 2 |
| 68 | 27793 | Clip, Conduit | 1 |
| 69 | 28942 | Screw, Hex Washer Hd. | 1 |
| 70 | 33151 | Link, Governor Spring | 1 |
| 71 | 34336 | Link, Throttle | 1 |
| 72 | 611004 | Key, Flywheel | 1 |
| 73 | 34080 | Spacer, Flywheel Key | 1 |
| 74 | 611050 | Flywheel | 1 |
| 75 | 34443A | Solid State Assy. | 1 |
| 75A | 610118 | Cover, Spark Plug | 1 |
| 76 | 650814 | Screw, Torx Hex Washer Hd. | 2 |
| 77 | 35020 | Wire, Ground | 1 |
| 79 | 34990 | Coil, Alternator | 1 |
| 80 | 650767 | Screw, Hex Washer Hd. | 2 |
| 81 | *30081A | Gasket, Exhaust | 1 |
| 91 | *33015A | Gasket, Cylinder Head | 1 |
| 92 | 34342 | Head, Cylinder | 1 |
| 93 | 6021A | Screw, Hex Flange Hd. | 8 |
| 94 | 35395 | Spark Plug, Resistor (Champion RJ-19LM or equivalent) | 1 |
| 95 | 33891B | Housing, Blower | 1 |
| 96 | 650561 | Screw, Hex Washer Hd. | 2 |
| 97 | 30200 | Screw, Hex Washer Hd. Self-Tap | 2 |
| 101 | 650815 | Washer, Belleville | 1 |
| 102 | 650816 | Nut, Flywheel | 1 |
| 110 | 34265 | Gasket, Fill Tube | 1 |
| 111 | 35581 | Tube, Oil Fill | 1 |
| 112 | 35499 | "O" Ring | 1 |
| 113 | 35582 | Dipstick, Oil Fill | 1 |
| 114 | 650562 | Screw, Hex Washer Hd. | 1 |
| 115B | 33904B | Tank Assy. (Incl. Ref. #118 & 120) | 1 |
| 115C | 28763 | Screw, Hex Washer Hd. | 2 |
| 119 | 30705 | Line, Fuel | 1 |
| 120 | 26460 | Clamp, Fuel Line | 2 |
| 121 | 33896 | Filter, Air Cleaner | 1 |
| 122 | 33897 | Cover, Air Cleaner | 1 |
| 122A | 33895 | Body, Air Cleaner | 1 |
| 123 | 650762 | Screw, Fil. Hd. | 2 |
| 129 | 29443 | Clip, Spring | 1 |
| 129A | 33887 | Clip, Breather | 1 |
| 130 | 34977 | Connector, Body | 1 |
| 132 | 632050A | Carburetor (Incl. Ref. #58) | 1 |
| 135 | 33906B | Gasket Set (Incl. items marked *) | 1 |

* Indicates parts included in Gasket Set, Ref. #135.

# PRODUCT CHANGES

In an effort to make improvements available to TORO owners as quickly as possible, minor changes are incorporated into Toro's products from time to time that do not become immediately shown in the Parts Catalog. If such a change apparently has been made in your unit, which is not reflected in your manual, see your TORO Distributor or his Authorized TORO Service Dealer for information and part numbers.

# IDENTIFICATION AND ORDERING

**MODEL AND SERIAL NUMBERS**

The mower has two identification numbers: a model number and a serial number. The two numbers are stamped on a decal which is located on the mower housing between the rear wheels. In any correspondence concerning the mower, supply model and serial numbers to assure that correct information and replacement parts are obtained.

To order replacement parts from an Authorized TORO Service Dealer, supply the following information:

1. Model and serial number of the mower.
2. Part number, description, and quantity of part(s) desired.

**Note:** Do not order by reference number if a parts catalog is being used; use the PART NUMBER.

# The Toro Promise

## *A TWO YEAR LIMITED WARRANTY*

*The Toro Company promises to repair your TORO Product if defective in materials or workmanship. The following time periods from the date of purchase apply:*

Residential Product ..... 2 Years
Residential Products Used Commercially... 45 Days

*The costs of parts and labor are included, but the customer pays the transportation costs. Just return any residential product to an Authorized TORO Service Dealer or TORO Distributor.*

Should you feel your TORO Product is defective and wish to rely on The Toro Promise, the following procedure is recommended:

1. Contact any Authorized TORO Service Dealer, TORO Master Service Dealer, or TORO Distributor (the Yellow Pages of your telephone directory is a good reference source).
2. He will either instruct you to return the product to him or recommend another Authorized TORO Service outlet which might be more convenient.
3. Bring the product along with your original sales slip, or other evidence of purchase date, to the service dealer.
4. The servicing dealer will inspect the unit, advise you whether the product is defective and, if so, make all repairs necessary to correct the defect without extra charge to you.

If for any reason you are dissatisfied with the dealer's analysis of the defect or the service performed, you may contact us.

Write:

TORO Consumer Service Department
8111 Lyndale Avenue South
Minneapolis, Minnesota 55420

The above remedy of product defects through repair by an Authorized TORO Service Dealer is the purchaser's sole remedy for any defect.

THERE IS NO OTHER EXPRESS WARRANTY. ALL IMPLIED WARRANTIES OF MERCHANTABILITY AND FITNESS FOR USE ARE LIMITED TO THE DURATION OF THE EXPRESS WARRANTY.

Some states do not allow limitations on how long an implied warranty lasts, so the above limitation may not apply to you.

This warranty applies only to parts or components which are defective and does not cover repairs necessary due to normal wear, misuse, accidents, or lack of proper maintenance. Regular, routine maintenance of the unit to keep it in proper operating condition is the responsibility of the owner.

All warranty repairs reimbursable under The Toro Promise must be performed by an Authorized TORO Service Dealer using Toro approved replacement parts.

Repairs or attemped repairs by anyone other than an Authorized TORO Service Account are not reimbursable under The Toro Promise. In addition, these unauthorized repair attempts may result in additional malfunctions, the correction of which is not covered by warranty.

THE TORO COMPANY IS NOT LIABLE FOR INDIRECT, INCIDENTAL OR CONSEQUENTIAL DAMAGES IN CONNECTION WITH THE USE OF THE PRODUCT INCLUDING ANY COST OR EXPENSE OF PROVIDING SUBSTITUTE EQUIPMENT OR SERVICE DURING PERIODS OF MALFUNCTION OR NON-USE.

Some states do not allow the exclusion or limitation of incidental or consequential damages, so the above limitation or exclusion may not apply to you.

This warranty gives you specific legal rights, and you may also have other rights which vary from state to state.

## COUNTRIES OTHER THAN THE UNITED STATES OR CANADA

Customers who have purchased TORO products exported from the United States or Canada should contact their TORO Distributor (Dealer) to obtain guarantee policies for your country, province or state. If for any reason you are dissatisfied with your Distributor's service or have difficulty obtaining guarantee information, contact the TORO importer. If all other remedies fail, you may contact us at The Toro Company.

Compliance with Radio Interference Regulations Certified.
Certifie Conforme au Reglement sur le Brouillage Radioelectrique.

AL-893470-R
Litho U.S.A.