Form Number 3355-414 Rev A

CCR™ Powerlite®
Snowthrower

Model No. 38172 - 270000001 and up.

Parts Catalog

Ordering Replacement Parts

To order replacement parts, please supply the part number, the quantity, and the description of each part desired.

Understanding Reference Numbers

Each Identified part in an illustration has a reference number. The reference number for a part also appears in the parts list, along with other information about the part.

This catalog uses two special reference number formats, one to indicate parts in a service assembly and another to indicate the quantity of a given part in an illustration.

Service Assembly Reference Numbers

Parts in service assemblies have reference numbers in the form a:b. The a represents the reference number of the entire service assembly and the b represents a sequential number unique to each part within the service assembly.

For example, a wheel assembly might be identified by reference number 6, the tire by 6:1, the valve by 6:2, and the wheel by 6:3. When you order the assembly identified by reference number 6, you receive all parts identified by reference numbers 6:1, 6:2, and 6:3. However, you may also order any part individually. Reference numbers of this type appear in illustrations and in part lists.

Reference Numbers Indicating Quantity

In an illustration, if a reference number indicates more than one part, the reference number has the form nX y. The n represents the quantity of the part, the X is the multiplication symbol, and the y represents the reference number.

For example, in an illustration, the reference number 2X 37 means that two of the parts identified by reference number 37 are indicated.

© The Toro Company - 2006
All Rights Reserved

Register your product at www.Toro.com

Contents

Description	Page
Rotor Drive Assembly	3
Chute and Upper Shroud Assembly	4
Rotor Assembly	5
Engine, Rotor Housing and Sideplate Assembly	6
Handle and Lower Shroud Assembly	7
Engine Assembly Tecumseh Hsk635 1723c	8
Carburetor Assembly No. 640086 Tecumseh Hsk635 1723c	10
Recoil Starter Assembly No. 590743 Tecumseh Hsk635 1723c	11

Part Description Abbreviations

Part descriptions in this catalog may include the following abbreviations.

AR. . . . . as required
ASM. . . . . assembly
BBC. . . . . blade brake clutch
CARR. . . . . carriage
DEG. . . . . degrees
EXT. . . . . external
FH. . . . . flat head
GA. . . . . gauge
HD. . . . . heavy-duty
HF. . . . . hex flange
HH. . . . . hex head
HHF. . . . . hex head flange
HHFTF. . . . . hex head flange thread forming
HJ. . . . . hex jam
HLH. . . . . hex lag head
HOC. . . . . height-of-cut
HSBH. . . . . hex socket button head
HSFH. . . . . hex socket flat head
HSH. . . . . hex socket head
HWH. . . . . hex washer head
HWHTF. . . . . hex washer head thread forming
HYD. . . . . hydraulic
LH. . . . . left hand
NI. . . . . nylon insert
NPTF. . . . . national pipe thread fine
PFH. . . . . phillips flat head
PPH. . . . . phillips pan head
PPHTF. . . . . phillips pan head thread forming
PRH. . . . . phillips round head
PTH. . . . . phillips truss head
PTO. . . . . power-take-off
RH. . . . . right hand
ROPS. . . . . roll-over protection system
SFH. . . . . slotted fillister head
SHH. . . . . slotted hex head
SHWH. . . . . slotted hex washer head
SPH. . . . . slotted pan head
SQH. . . . . square head
SRH. . . . . slotted round head
STD. . . . . standard
TAP. . . . . self tapping
TTH. . . . . torx truss head

Footnotes

❶ Not illustrated
❷ Not serviced separately
❸ Obtain from your local Tecumseh dealer

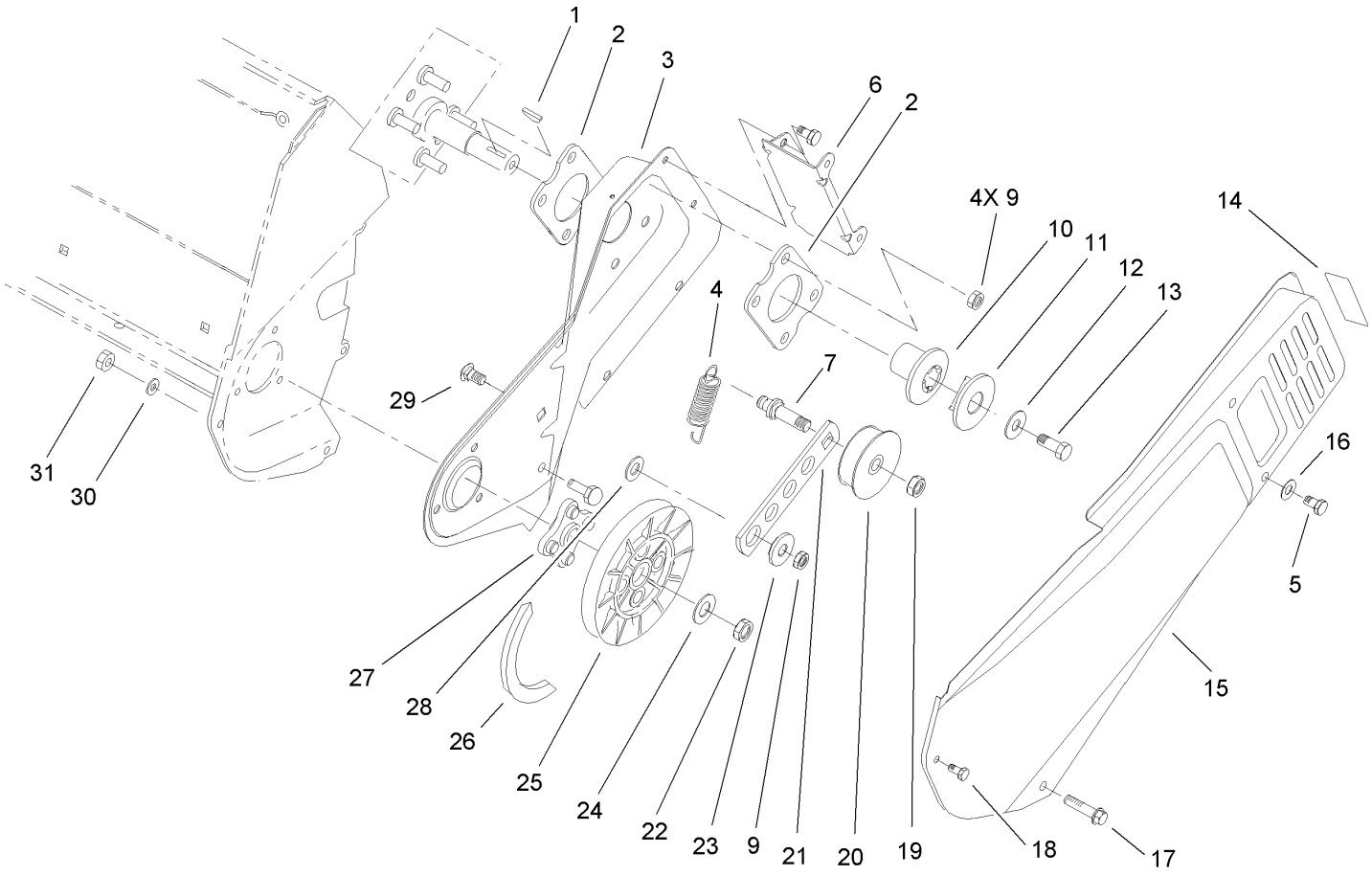

Rotor Drive Assembly

Ref	Part No.	Qty.	Description
1	3257-3	1	Key-Woodruff
2	71-5290-03	2	Plate-Engine
3	95-7945-03	1	Sideplate-LH
4	75-9020	1	Spring-Extension
5	32144-4	4	Screw-HWH
6	75-8870-03	1	Bracket-Cover, Belt
7	75-8720	1	Pin-Idler
9	3296-29	5	Nut-Lock, NI
10	71-5050	1	Hub-Half Sheave
11	71-5060	1	Cap-Half Sheave
12	3256-71	1	Washer-Flat
13	3235-6	1	Screw-HH
14	104-2767	1	Decal-Warning
15	75-8830-03	1	Cover-Belt
16	3256-1	2	Washer-Flat
17	46-8094	3	Screw-Plastite
18	32105-23	1	Screw
19	3296-59	1	Nut-Lock, NI
20	71-5260	1	Pulley-Idler
21	75-9050	1	Arm-Idler
22	3296-38	1	Nut-Lock, NI
23	75-8700	1	Bushing-Idler
24	3256-25	1	Washer-Flat
25	75-8750	1	Pulley-Driven

Ref	Part No.	Qty.	Description
26	75-9010	1	V-Belt
27	75-8740	1	Hub
28	25-5640	1	Washer
29	3230-23	1	Screw-CARR
30	3256-14	1	Washer-Flat
31	3296-2	1	Nut-Lock

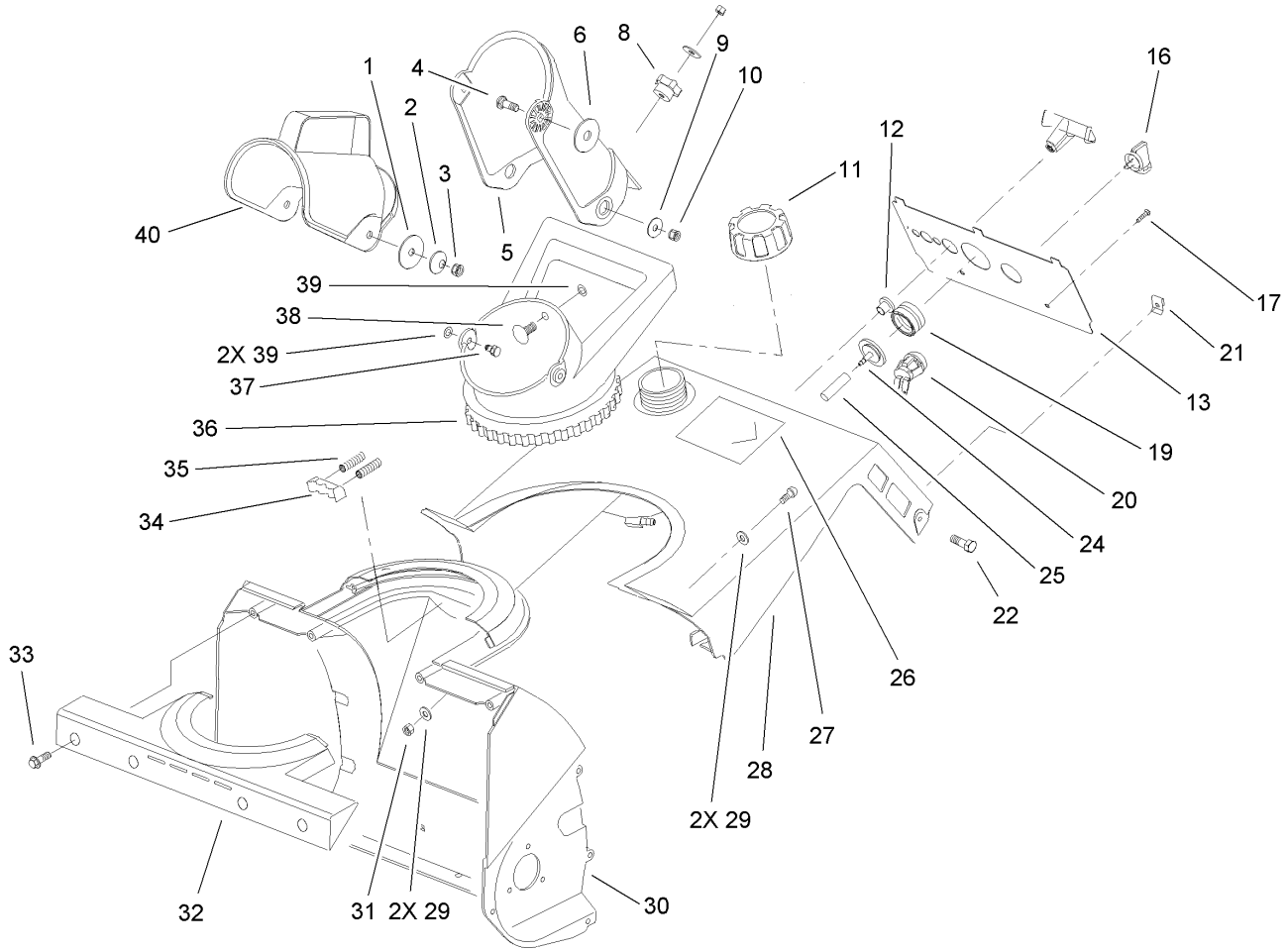

Chute and Upper Shroud Assembly

Ref	Part No.	Qty.	Description
1	3256-68	2	Washer-Flat
2	3290-340	2	Washer-Belleville
3	3296-29	2	Nut-Lock, NI
4	3230-2	2	Bolt-CARR
5	104-2764	1	Chute
6	95-1905	2	Washer-Rubber
8	233-67	1	Knob-Chute
9	3256-81	2	Washer-Flat
10	3296-56	2	Nut-Lock, NI
11	104-4133	1	Gas Cap ASM
12	23-7470	1	Guide-Rope, Starter
13	104-4938	1	Panel-Control
16	63-8360	1	Key-Ignition
17	32144-53	2	Screw-SHWH
19	66-7460	1	Bulb-Primer
20	40-5940	1	Switch
21	49-1490	2	Nut
22	32144-89	2	Screw-Forming, Thread
24	44-2750	1	Body-Primer
25	44-3173	1	Hose-Primer
26	108-5081	1	Decal-Shroud
27	3250-32	2	Screw-PPH
28	105-2994	1	Shroud-Tank, Gas Upper
29	3256-1	4	Washer-Flat

Ref	Part No.	Qty.	Description
30	75-8660	1	Housing
31	3296-42	2	Nut-Lock, NI
32	75-8650	1	Retainer-Chute
33	46-8094	4	Screw-Plastite
34	75-9160	1	Detent-Chute
35	75-9170	2	Spring-Compression
36	75-8670	1	Handle-Chute
37	321-3	2	Screw-HH
38	3229-11	1	Screw-CARR
39	32115-15	3	Pushnut-Retainer, Bolt
40	75-8770	1	Deflector-Chute

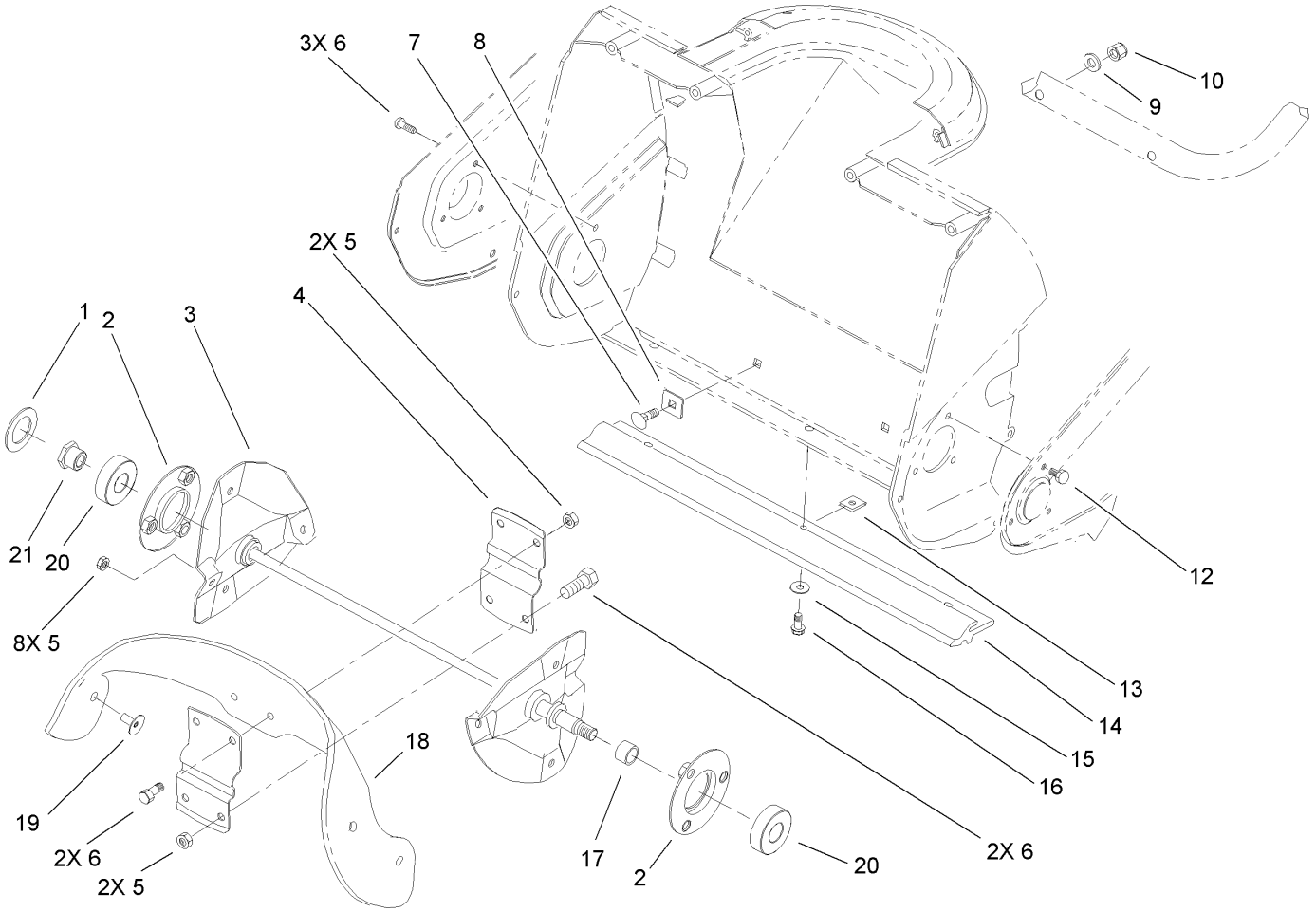

Rotor Assembly

Ref	Part No.	Qty.	Description
1	75-9180	1	Washer-Rubber
2	75-9080	2	Flange Bearing ASM
3	75-8840-03	1	Rotor Shaft ASM
4	75-8880-03	2	Support-Rotor
5	3296-56	12	Nut-Lock, NI
6	3234-33	7	Screw-HHF
7	3229-5	2	Screw-CARR
8	75-9040	2	Washer-Square
9	3-7501	2	Washer
10	3296-42	2	Nut-Lock, NI
12	321-3	3	Screw-HH
13	32115-19	3	Nut-Speed, U Type
14	75-8780	1	Scraper
15	3256-14	3	Washer-Flat
16	32144-34	3	Screw-Forming, Thread
17	75-8710	1	Spacer
18	84-1980	2	Blade-Rotor
19	84-1970	8	Screw
20	100-1048	2	Bearing-Ball
21	75-8690	1	Nut

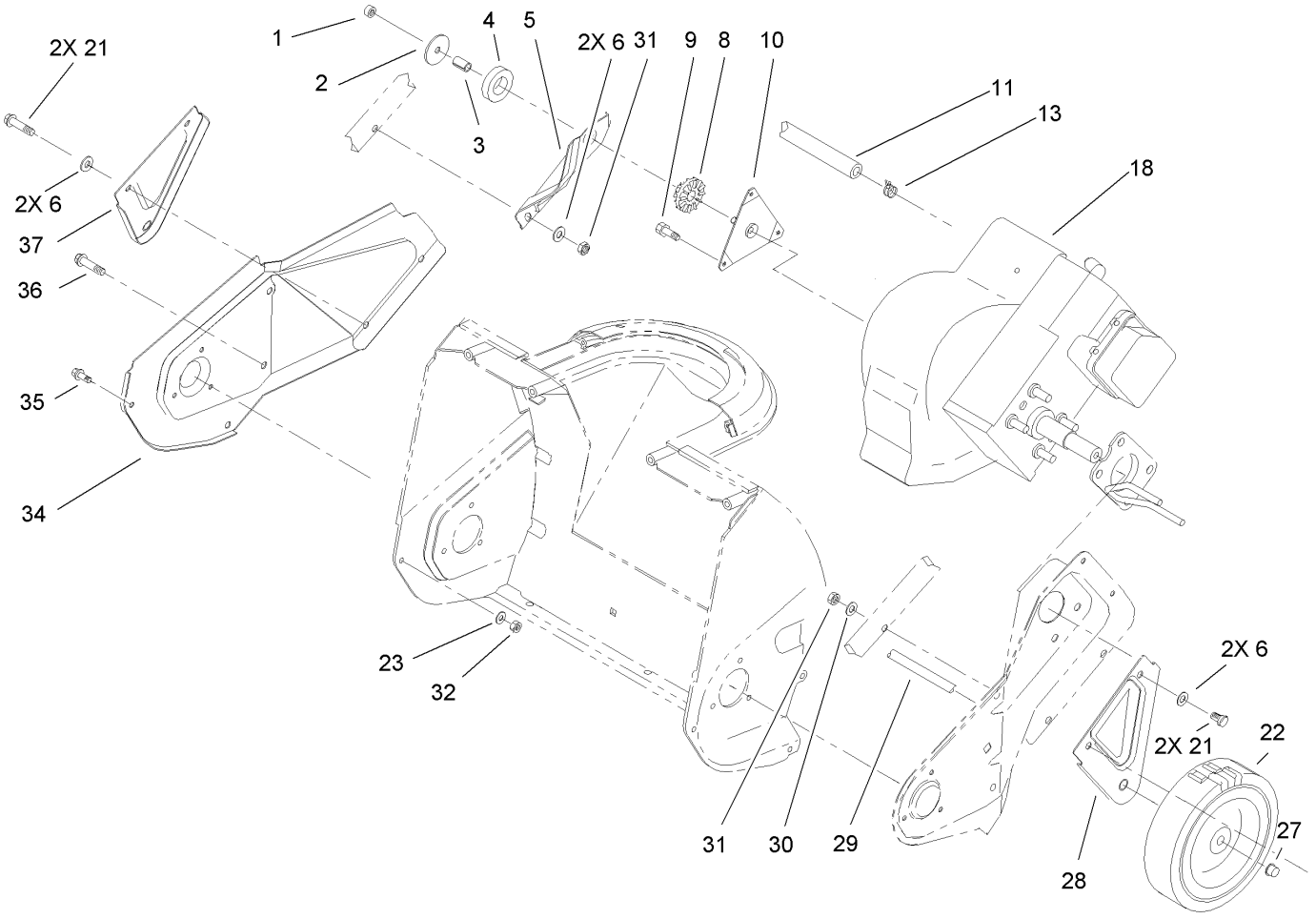

Engine, Rotor Housing and Sideplate Assembly

Ref	Part No.	Qty.	Description
1	3296-56	1	Nut-Lock, NI
2	3256-58	1	Washer-Flat
3	80-0650	1	Spacer-Tubular
4	95-1903	1	Ring-Isolator
5	75-8980-03	1	Bracket-Support, Engine
6	3256-1	6	Washer-Flat
8	75-9100	1	Bushing-Isolator
9	94-2789	3	Screw
10	92-6012	1	Bracket And Stud ASM
11	110-3447	1	Hose-Fuel
13	2412-98	2	Clamp
❷❸18		1	Engine-Tecumseh, Hsk635-1723C
21	321-10	4	Screw-HH
22	23-3250	2	Wheel
23	3256-14	1	Washer-Flat
27	3290-320	2	Retainer-Push On
28	75-8910-03	1	Bracket-Wheel, LH
29	27-0062	1	Axle
30	3-7501	2	Washer
31	3296-42	4	Nut-Lock, NI
32	3296-2	1	Nut-Lock
34	75-8820-03	1	Plate-Side, RH
35	32105-23	1	Screw

Ref	Part No.	Qty.	Description
36	46-8094	3	Screw-Plastite
37	75-8900-03	1	Bracket-Wheel, RH

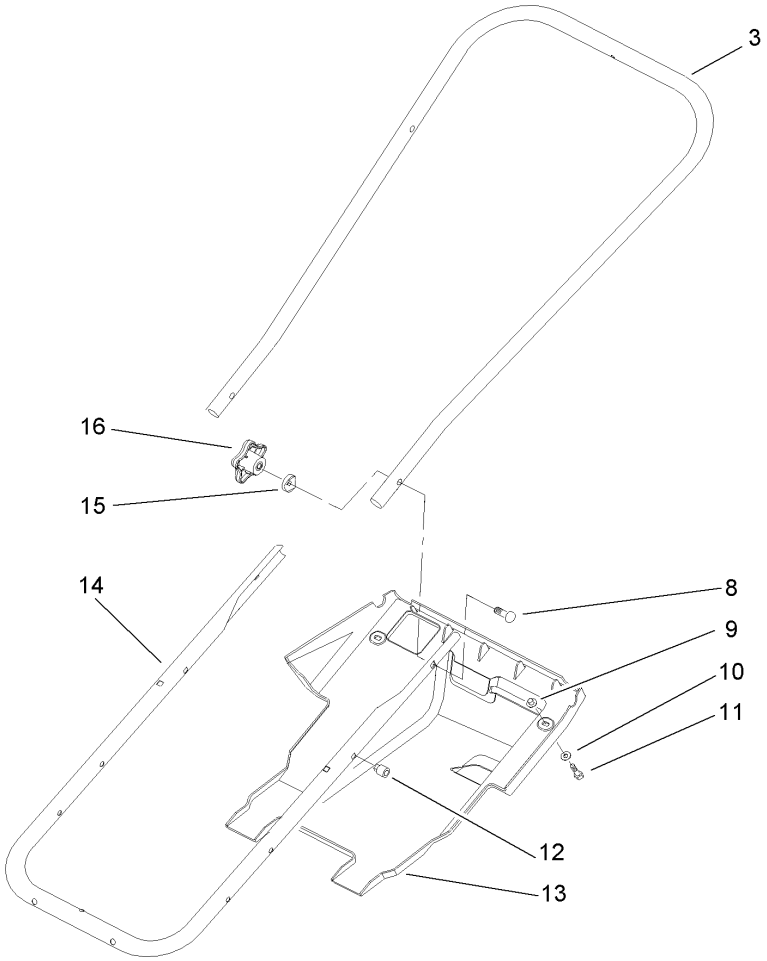

Handle and Lower Shroud Assembly

Ref	Part No.	Qty.	Description
3	75-9070-03	1	Handle-Upper
8	92-2260	2	Screw-Handle
9	605120	2	Nut-Clip
10	3256-14	2	Washer-Flat
11	32144-34	2	Screw-Forming, Thread
12	32115-17	2	Nut-Expansion
13	75-8790	1	Shroud
14	75-9060-03	1	Tube-Frame
15	107-3844	2	Washer
16	106-4161	2	Knob-Handle

Engine Assembly
Tecumseh Hsk635 1723c

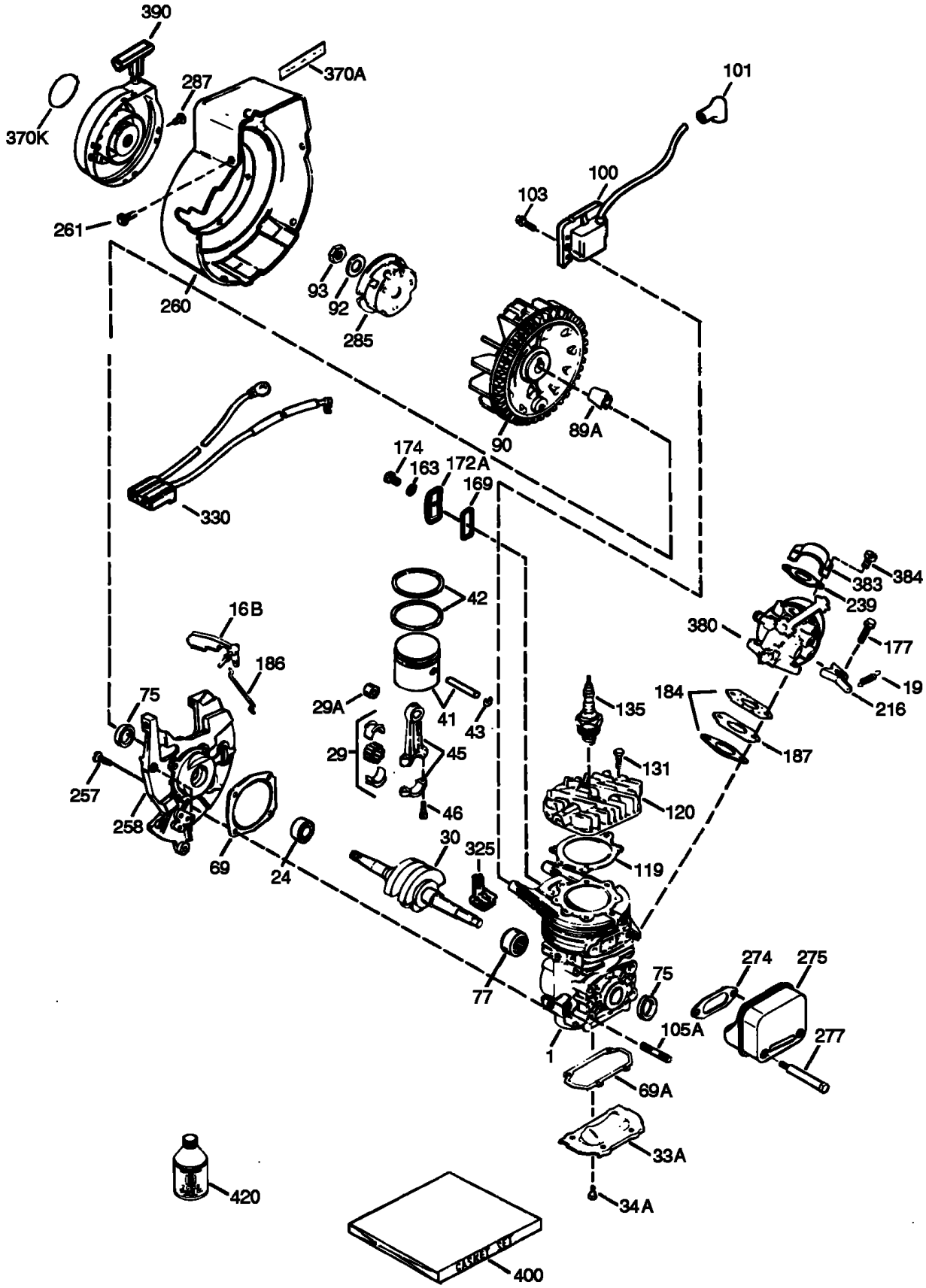

Engine Assembly
Tecumseh Hsk635 1723c

Ref	Part No.	Qty.	Description
❸16B	490291A	1	Vane-Air
❸19	570707	1	Spring-Extention
❸24	530110	1	Bearing-Ball
❸29	530150	1	Needle Bearing And Liner Set (37 Needles)
❸29A	530104A	1	Bearing-Cartridge
❸30	290602	1	Crankshaft
❸33A	570644	1	Plate-Cover
❸34A	650579	4	Screw, T-25, 10-24 X 1/2”
❸41	310283A	1	Piston And Pin ASM Piston And Pin ASM (Incl. Ref. #43)
❸42	310289	2	Ring Set
❸43	310167	2	Ring-Retaning
❸45	310235B	1	Connecting Rod ASM Piston And Pin ASM (Incl. Ref. #29, 29A, And 46)
❸46	650633	2	Bolt-Rod, Connecting
❸69	510292A	1	Gasket-Cover, Cylinder
❸69A	510323A	1	Gasket-Plate, Cover
❸75	510319	2	Seal-Oil
❸77	530105	1	Bearing-Cartridge
❸89A	611032	1	Sleve-Adapter
❸90	611066	1	Flywheel
❸92	650815	1	Washer-Belleville
❸93	650390	1	Nut-Flywheel
❸100	34443B	1	Solid State Ignition ASM (Incl. Ref. #101)
❸101	610118	1	Cover-Spark Plug
❸103	651007	2	Screw (T-15, 10-24 X 15/16)
❸105A	650796	4	Stud
❸119	510274A	1	Gasket-Cylinder Head
❸120	250240B	1	Head-Cylinder
❸131	650477	5	Screw, T-30, 1/4-20 X 3/4
❸135	611049	1	Plug-Spark, Resister (Rcj8Y)
❸163	650838	1	Washer
❸169	510325A	1	Cover-Compression, Release
❸172A	570708	1	Cover-Compression, Release
❸174	650579	1	Screw, T-25, 10-24 X 1/2”
❸177	650959	2	Screw, 5/32, 1/4-20 X 1”
❸184	510326A	2	Gasket-Carburetor
❸186	490322	1	Governor-Link
❸187	570438A	1	Spacer
❸216	570645	1	Lever-Adjusting, Rpm
❸239	35815	1	Gasket-Air Cleaner
❸257	650911	4	Screw, T-30, 1/4-20 X 5/8”
❸258	350422	1	Blower Housing Base (Incl. Ref. #75)
❸260	350437	1	Housing-Blower
❸261	650737	4	Screw, 1/4-20 X 1/2”
❸274	510207A	1	Gasket-Exhaust
❸275	390332	1	Muffler (Incl. Ref. #274 And 277)
❸277	650869	2	Screw, 1/4-20 X 2-3/4”
❸285	590551A	1	Cup-Starter

Ref	Part No.	Qty.	Description
❸287	650926	3	Screw (8-32 X 21/64)
❸325	29443	1	Clip-Wire
❸330	611131A	1	Harness-Wire
❸370A	36261	1	Decal-Lubrication
❸370K	36695	1	Decal-Starter
❸380	640086A	1	Carburetor
❸383	570434	1	Baffle-Carburetor
❸384	650431	2	Screw, T-25, 10-32 X 5/8”
❸390	590743	1	Rewind Starter ASM
❸400	510324B	1	Gasket Set
❸420	730227B	1	2-Cycle Oil (8 Oz.)

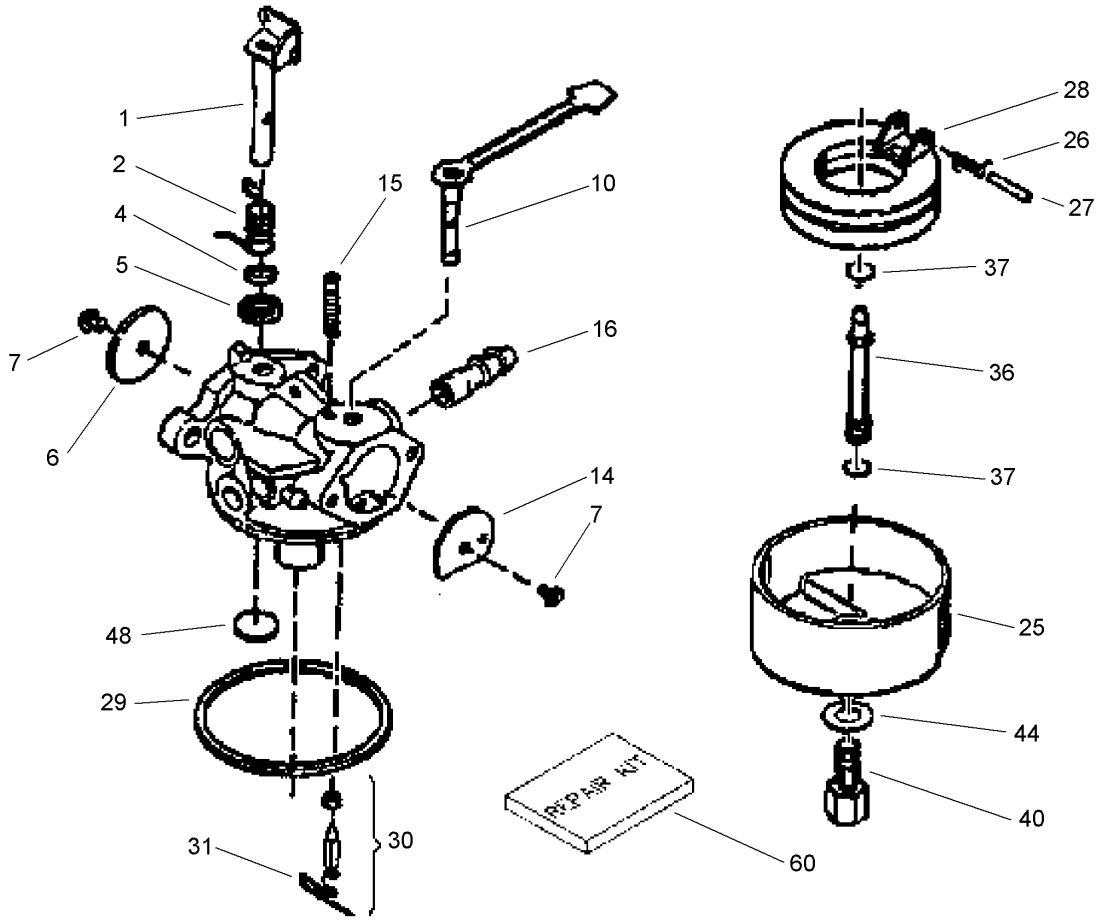

Carburetor Assembly No. 640086
Tecumseh Hsk635 1723c

Ref	Part No.	Qty.	Description
❸0	640086A	1	Carburetor (Incl. 184 Of Engine Parts List)
❸1	632166A	1	Throttle Shaft And Lever ASM
❸2	632169	1	Spring-Trottle, Return
❸4	631184	1	Washer-Seal, Dust
❸5	631183	1	Seal-Dust, Throttle
❸6	631616	1	Throttle-Shutter
❸7	650506	2	Screw-Shutter
❸10	632553	1	Choke Shaft And Lever ASM
❸14	31837	1	Shutter-Choke
❸15	630735	1	Spring-Positioning, Choke
❸16	632164	1	Fitting-Fuel
❸25	631867	1	Bowl-Float
❸26	632386	1	Spring-Float, Dampening
❸27	631024	1	Shaft-Float
❸28	632019	1	Float
❸29	631028	1	O Ring-Bowl, Float
❸30	631021	1	Inlet Needle, Seat And Clip (Incl. 31)
❸31	631022	1	Clip-Spring
❸36	640080	1	Tube-Nozzle, Main
❸37	632547	2	O Ring-Tube, Main Nozzle
❸40	640301	1	Nut-Bowl, High Speed
❸44	27110A	1	Washer-Bowl

Ref	Part No.	Qty.	Description
❸48	631027	1	Welch Plug-Atmospheric Vent
❸60	632760	1	Repair Kit

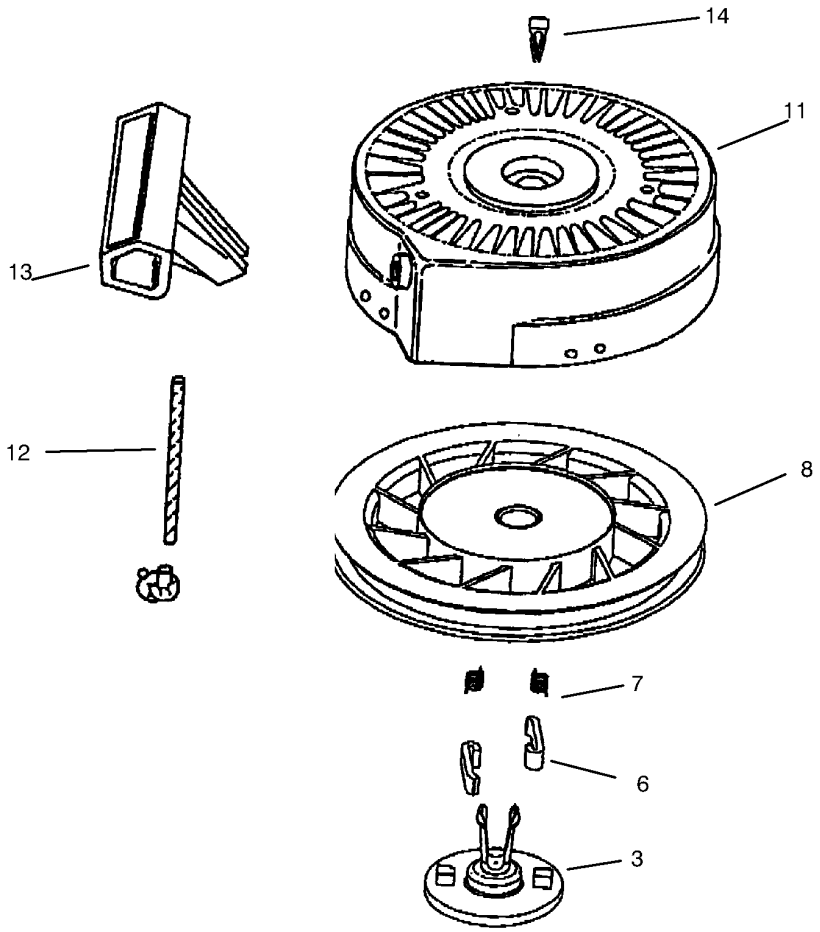

Recoil Starter Assembly No. 590743
Tecumseh Hsk635 1723c

Ref	Part No.	Qty.	Description
❶❸0	590743	1	Rewind Starter ASM
❸3	590740	1	Retainer
❸6	590616	2	Dog-Starter
❸7	590617	2	Spring-Dog
❸8	590645A	1	Pulley And Rewind Spring Assembly
❸11	590643A	1	Starter Housing ASM
❸12	590535	1	Rope-Starter (98In X 9/64In Diameter)
❸13	590701	1	Handle-Starter
❸14	590760	1	Clip-Spring


TORO®