FORM NO. 3313-984

TORO®

MODEL NO. 16212-0000001 & UP

PARTS CATALOG

21" S.P. SIDE DISCHARGE

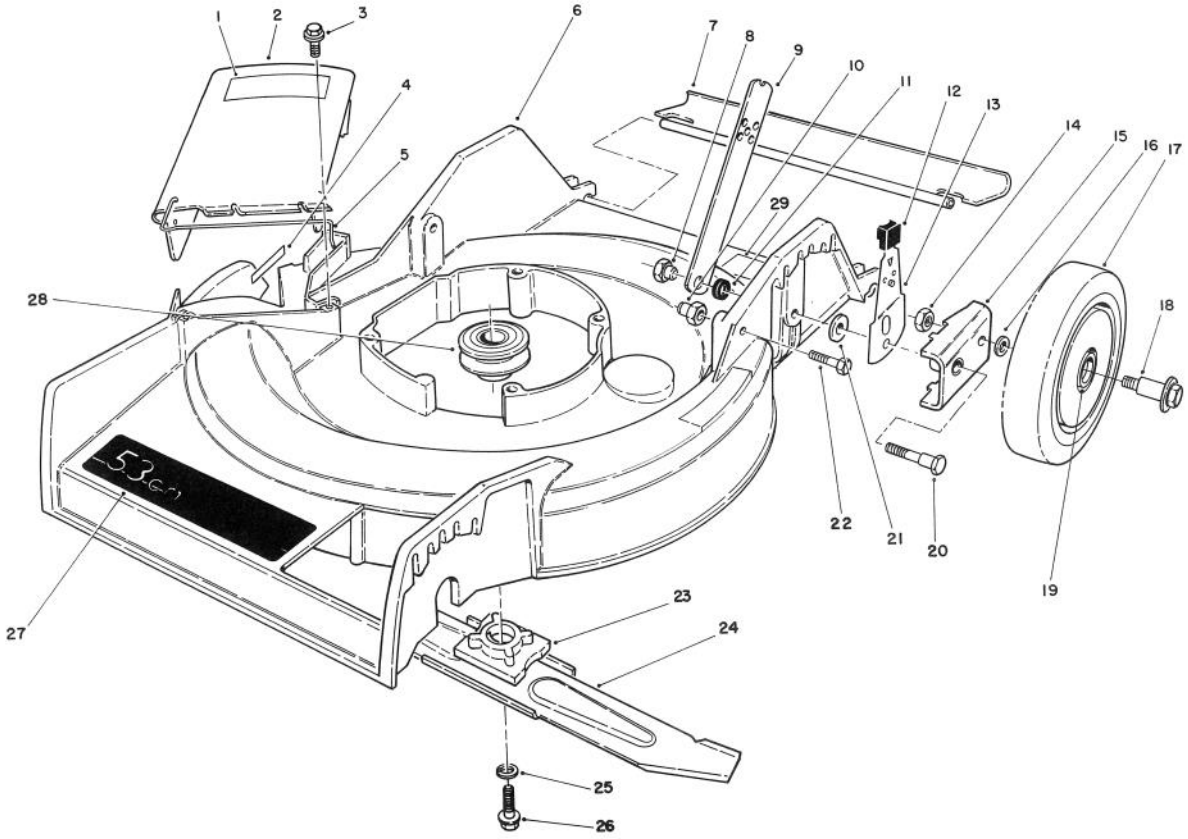

C-0293-90

HOUSING ASSEMBLY

Ref. No.	Part No.	Description	No. Used
1	62-4210	Decal — Danger	1
2	13-5909	Deflector (Incl. Ref. #1 & 5)	1
3	46-6811	Screw — Washer Hd.	2
4	62-4200	Decal — Danger	1
5	20-2640	Spring — Hinge	1
6	13-3489	Housing (Incl. Ref. #4)	1
7	66-5990	Shield — Rear	1
8	27-6520	Nut — Shoulder	2
9	27-7080	Latch — Handle	2
10	12-2080	Nut — Shoulder	2
11	3-3287	Spacer — Handle Latch	2
12	25-7740	Knob — Spring Arm	2
13	66-9260	Spring Arm Assembly L.H.	1
*	66-9250	Spring Arm Assembly R.H.	1
14	52-3620	Locknut	2
15	47-2940	Pivot Arm Assembly	2

Ref. No.	Part No.	Description	No. Used
16	40-1940	Washer — Wheel Bolt	2
17	11-9509	Wheel & Tire Assembly (Incl. Ref. #19)	2
18	27-6230	Bolt — Wheel	2
19	27-6250	Bushing	4
20	44-5271	Screw — Pivot	2
21	33-0390	Washer — Pivot	2
22	322-6	Screw — Cap, Hex Hd.	2
23	49-7900	Retainer — Blade	1
24	20-2720	Blade — 21"	1
25	3253-22	Lockwasher	1
26	26-0671	Screw — Blade	1
27	70-1590	Decal — 53	1
28	46-7910	Pulley — Driver	1
29		Decal — Noise Rating	1

* Not Illustrated

©The TORO Company — 1989

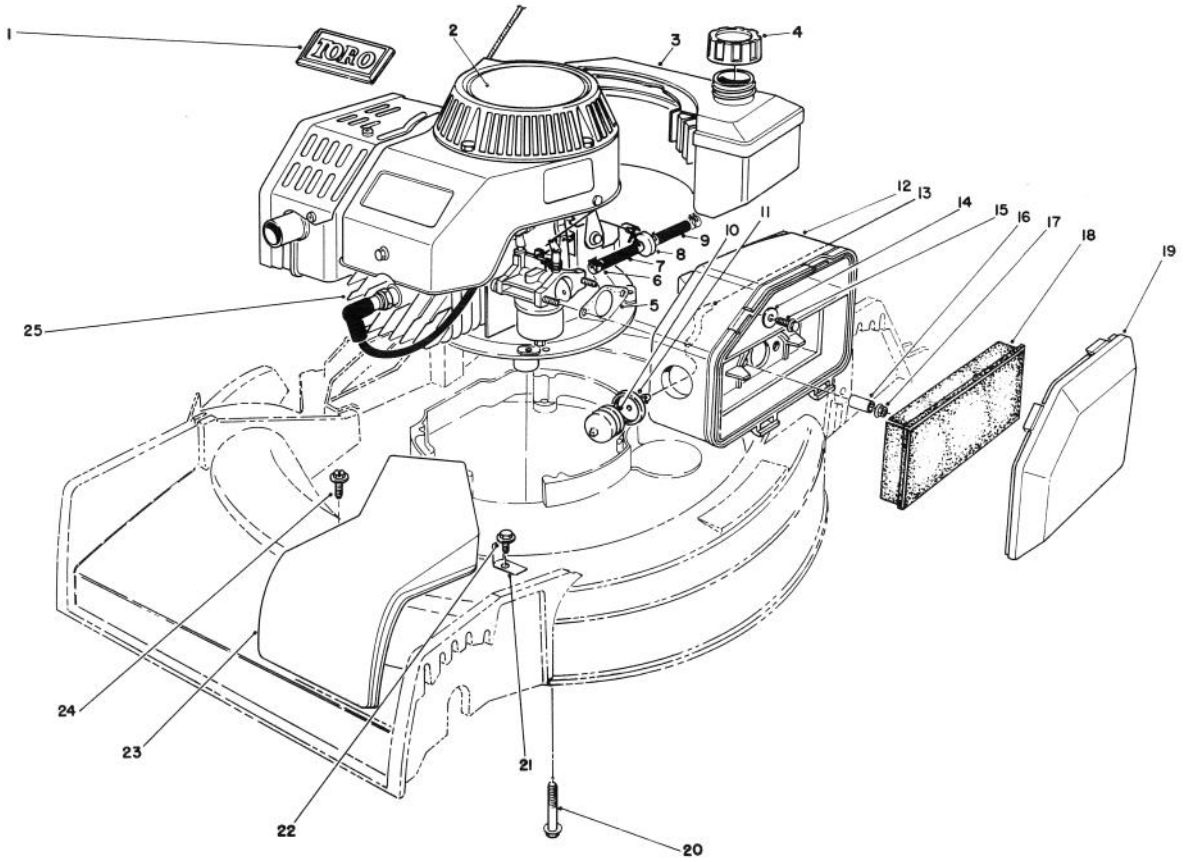

C-0294-90

ENGINE ASSEMBLY

Ref. No.	Part No.	Description	No. Used
1	46-8290	Plate — Toro Logo	1
2	57-3110	Decal — Recoil	1
3	81-0162	Fuel Tank Assembly	1
4	55-3575	Gas Cap Assembly	1
5	81-0090	Gasket — Air Cleaner	1
6	2412-95	Clamp — Fuel Line	4
7	51-3216	Fuel Line	1
8	56-6360	Filter — Fuel	1
9	51-3215	Fuel Line	1
10	66-7460	Bulb — Primer	1
11	44-2750	Body — Primer	1
12	63-9330	Air Cleaner	1
13	44-3172	Hose — Primer	1

Ref. No.	Part No.	Description	No. Used
14	3256-16	Washer — Flat	1
15	51-2690	Screw — Washer Hd.	1
16	62-3980	Sleeve	2
17	50-7180	Locknut	2
18	63-9380	Foam Element — Air Cleaner	1
19	63-9340	Cover — Air Cleaner	1
20	66-9302	Capscrew — Hex Hd.	3
21	70-8080	Clamp — Cable	1
22	32144-70	Screw — Thread Forming	1
23	46-4780	Cover — Belt	1
24	12-5450	Screw — Thread Forming	2
25	51-0413	Engine (Complete)	1

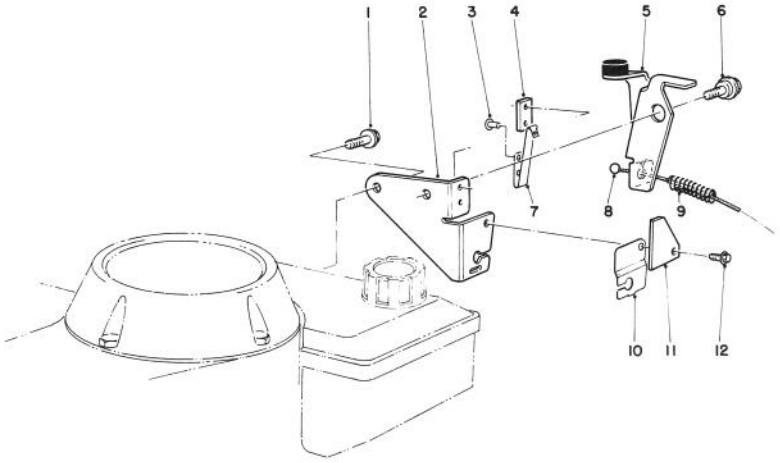

C-0185-90

BRAKE ASSEMBLY

Ref. No.	Part No.	Description	No. Used
1	46-0790	Screw — Self Tapping	1
2	12-4599	Plate — Mounting Assembly (Incl. Ref. #3, 4 & 7)	1
3	3290-459	Rivet	2
4	60-9020	Strap — Insulation	1
5	66-5380	Brake Plate Assembly	1
6	56-6190	Screw — Shoulder, Metric	1

Ref. No.	Part No.	Description	No. Used
7	60-9010	Strap — Ground	1
8	56-6093	Cable — Brake	1
9	66-5370	Spring — Compression	1
10	53-4610	Clamp — Cable	1
11	53-4690	Stop — Ground Strap	1
12	12-5450	Screw — Self Tapping	1

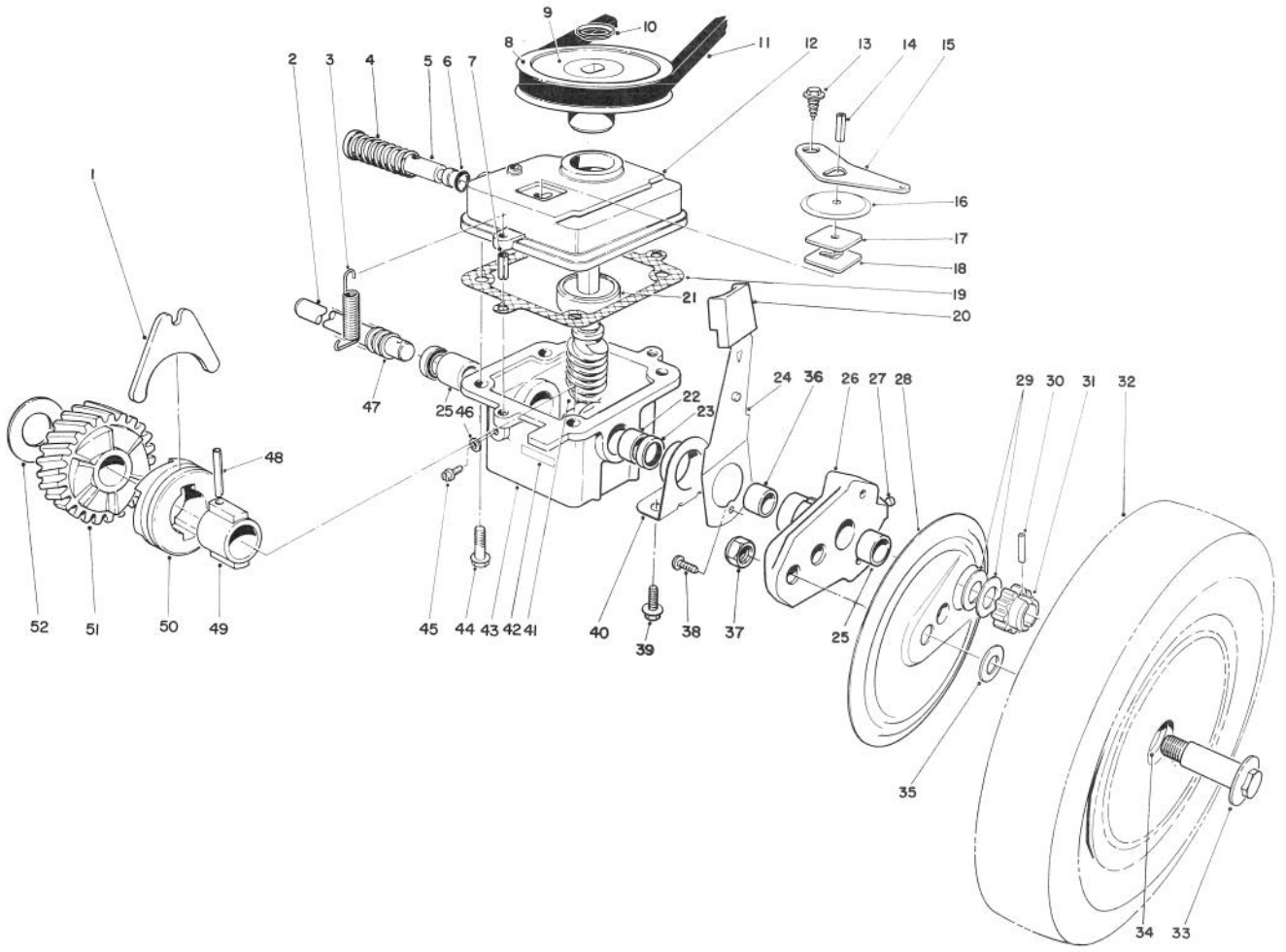

C-0188-90

GEAR CASE ASSEMBLY

Ref. No.	Part No.	Description	No. Used
1	5-3247	Fork — Shifter	1
2	66-6020	Shaft — Drive	1
3	17-4490	Spring — Tension, Belt	1
4	3-0731	Spring	1
5	46-8240	Rod — Shifter	1
6	237-137	O-Ring	1
7	32121-1	Pin — Roll	2
8	18-9760	Pulley	1
9	33-2450	Decal — Caution	1
10	3290-346	Retainer — Push On	1
11	5-4505	V-Belt	1
12	39-1101	Cover — Gear Case	1
13	32140-64	Screw — Self Tapping	1
14	32121-114	Pin — Roll	1
15	5-3252	Arm — Shifter	1
16	52-7380	Cover — Dust, Transmission	1
17	52-7370	Filter — Dust	1
18	3-0681	Plate — Latch	1
19	36-1000	Gasket — Gear Case	1
20	25-7740	Knob — Arm	2
21	47-7250	Bearing — Ball	1
22	47-2890	Bushing	1
23	47-6730	Seal — Oil	2
24	67-9370	Arm — Spring	2
25	47-2900	Bushing	3

Ref. No.	Part No.	Description	No. Used
26	66-6001	Arm — Pivot (Incl. Ref. #25, 27 & 36)	2
27	302-56	Fitting — Grease	2
28	63-5270	Cover — Wheel	2
29	46-6510	Washer — Thrust	4
30	32121-98	Pin — Coil	2
31	46-6520	Gear — Pinion	2
32	11-9519	Wheel, Tire & Gear Assy (Incl. Ref. #34)	2
33	27-6230	Bolt — Wheel	2
34	27-6250	Bushing — Wheel	4
35	40-1940	Washer — Wheel Bolt	2
36	70-9760	Bushing	2
37	52-3620	Nut	2
38	63-8590	Screw — Button Hd	2
39	32144-70	Screw — Thread Forming	4
40	68-9000	Cap — End	2
41	8-5679	Worm Shaft & Gear (Incl. Ref. #51)	1
42	40-4755	Decal — Gear Box	1
43	8-0479	Gear Case (Incl. Ref. #22, 23 & 25)	1
44	11-9760	Screw	4
45	28-1550	Screw — Nylon	1

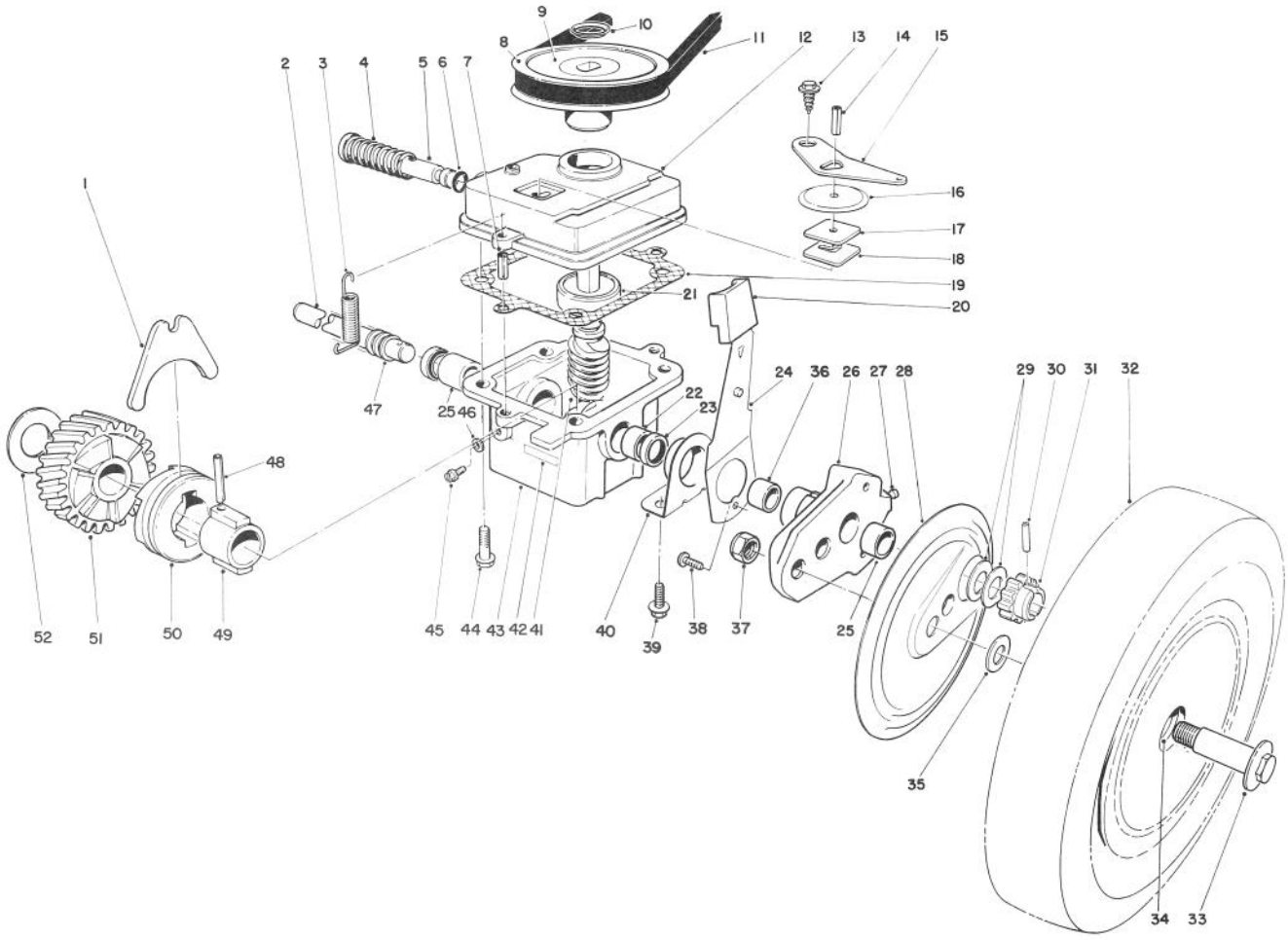

C-0188-90

GEAR CASE ASSEMBLY (Continued)

Ref. No.	Part No.	Description	No. Used
46	46-9640	Gasket	1
47	24-7920	Cover — Drive Shaft	1
48	32121-88	Pin — Coil	1
49	3-0721	Sleeve	1
50	19-5660	Jaw — Clutch	1
51		Gear — Helical	1

Ref. No.	Part No.	Description	No. Used
52	3-0724	Washer — Thrust	1
*	13-3479	Gear Case Assembly (Complete)	1
*	27-0490	Bearing & Shaft Tool	1
*†	39-9640	Metric Bearing Tool	1
*	27-0460	Tool — Bushing	1

* Not Illustrated † Use with 27-0490 Bearing & Shaft Tool

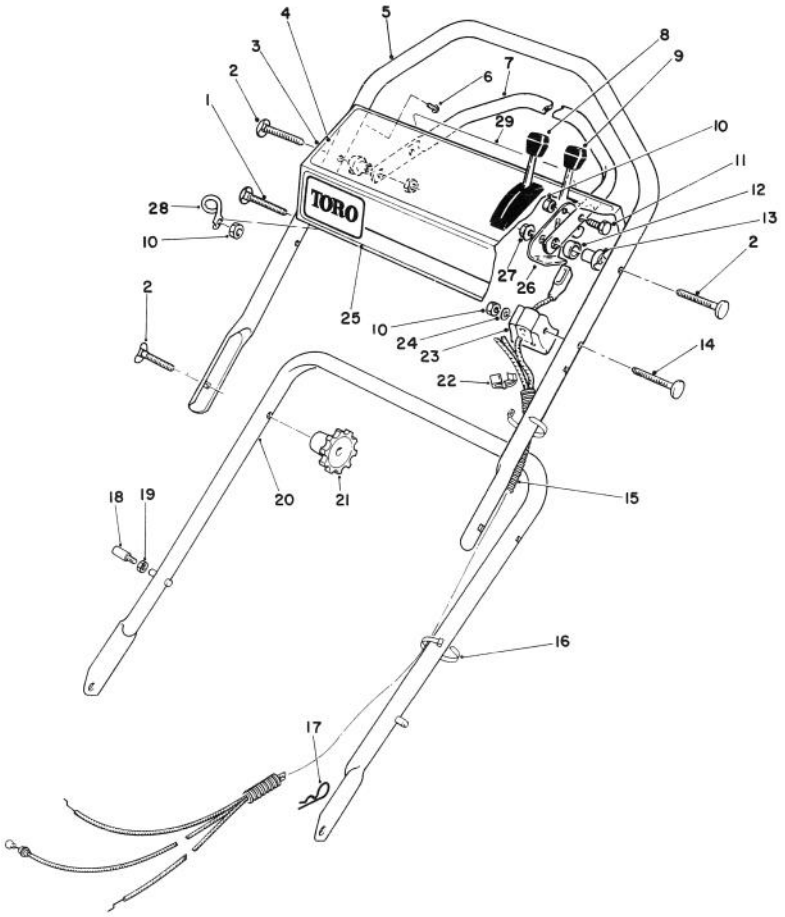

C-0295-90

HANDLE ASSEMBLY

Ref. No.	Part No.	Description	No. Used
1	46-6433	Screw — Handle	1
2	17-9421	Screw — Handle	4
3	13-3469	Panel — Control (Incl. Ref. #4 & 29)	1
4	66-1840	Decal — Instructions	1
5	46-5411	Handle — Upper	1
6	32104-76	Screw — Self Tapping	5
7	52-7430	Control Bar Assembly	1
8	46-6884	Control — Traction Bend Type 3 Sheath Lg. 53" (134.6 cm) Wire Lg. 2½" (6.4 cm)	1
9	49-4197	Control — Throttle/Choke Bend Type 2 Sheath Lg. 41" (104.1 cm) Wire Lg. 2¼" (5.7 cm)	1
10	3296-42	Locknut	3
11	321-3	Screw — Cap, Hex Hd.	1
12	256-276	Spacer — Nylon	1
13	49-1630	Support — Spacer	2
14	46-6434	Screw — Handle	1
15	46-6441	Cover — Control Cable	1
16	3290-378	Cable Tie	2
17	3290-255	Pin — Cotter, Hair	2
18†	49-2750	Pin — Handle	2
19†	3296-47	Locknut	2
20	49-1690	Handle — Lower	1
21	19-4050	Knob — Handle	2
22	2412-50	Clip — Convoluted Tubing	4
23	46-6980	Support — Cable	1
24	3256-22	Washer — Flat	1
25	66-1770	Decal — Toro	1
26	74-1820	Lever — Control	1
27	3296-58	Locknut	2
28	46-8080	Guide — Rope	1
29	66-1790	Decal — Danger	1

† Service Replacement Parts

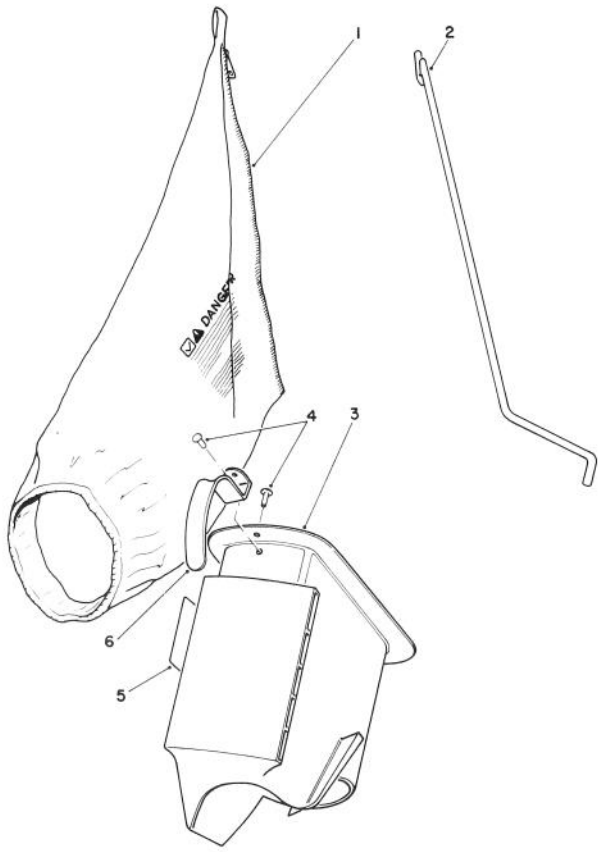

C-0187-90

BAGGING KIT NO. 47-6510 (OPTIONAL)

Ref. No.	Part No.	Description	No. Used
1	6-0929	Grass Bag	1
2	47-5830	Bag Rod	1
3	6-1089	Grass Chute (Incl. Ref. #4 & 6)	1

Ref. No.	Part No.	Description	No. Used
4	3295-26	Rivet	2
5	36-5230	Decal — Bag Chute	1
6	20-4650	Handle Chute	1

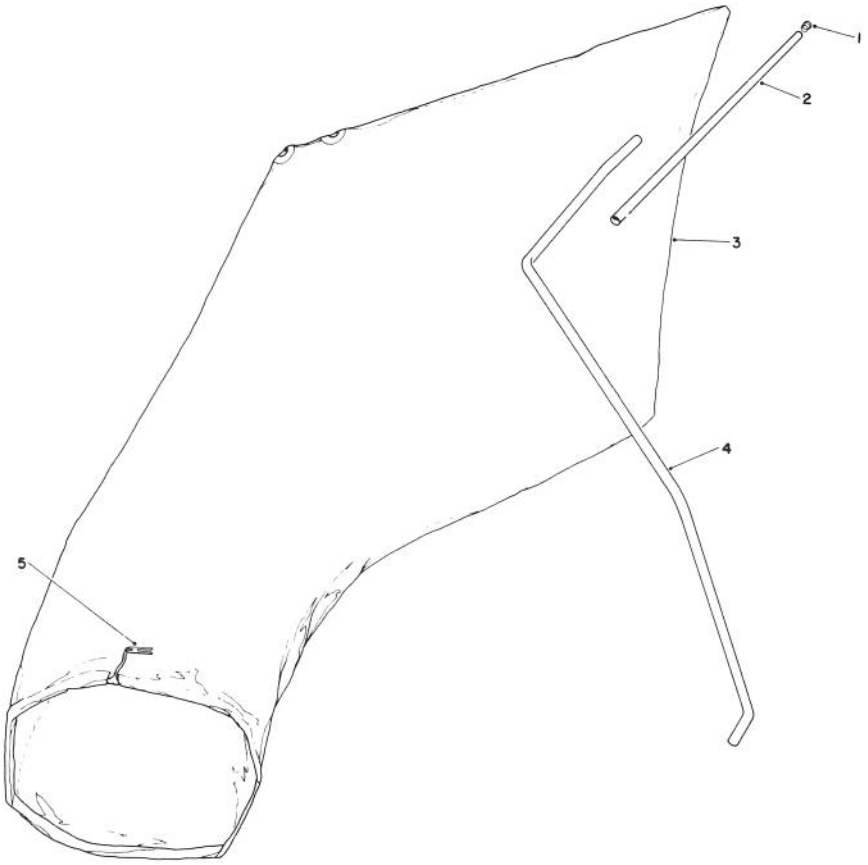

C-0186-90

GIANT BAGGING KIT NO. 29-9750 (OPTIONAL)

Ref. No.	Part No.	Description	No. Used
1	2410-29	Cap	1
2	29-7000	Tube 25″	1
3	8-4719	Bag (Incl. Ref. #5)	1

Ref. No.	Part No.	Description	No. Used
4	22-4820	Hanger Rod	1
5	3-2781	Bag Cord Fasteners	1

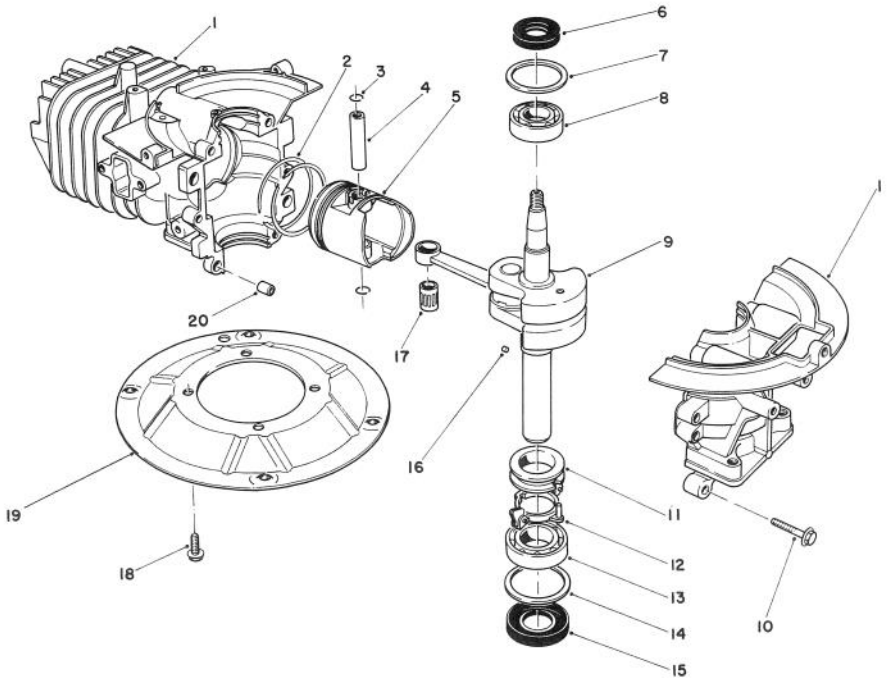

C-0190-90

CRANKSHAFT ASSEMBLY (MODEL NO. 47PK9)

Ref. No.	Part No.	Description	No. Used
1	81-2800	Crankcase/Cylinder Assy.	1
2	81-0590	Ring Set	1
3	81-0620	Circlip	2
4	81-0600	Pin — Wrist	1
5	81-0580	Piston (58 mm)	1
6	81-0720	Oil Seal — Upper	1
7	81-0710	Thrust Washer — Upper	1
8	81-0690	Bearing — Upper (20 mm)	1
9	81-4600	Crankshaft/Connecting Rod Assembly	1
10	81-0540	Bolt (30 mm Lg.)	6

Ref. No.	Part No.	Description	No. Used
11	81-0770	Spacer — Governor	1
12	81-0750	Bracket — Governor Arm	1
13	81-0700	Bearing — Lower (25 mm)	1
14	81-0730	Thrust Washer — Lower	1
15	81-0740	Oil Seal — Lower	1
16	81-0760	Pin — Crankshaft	1
17	81-0610	Bearing — Wrist Pin	1
18	81-0570	Bolt (20 mm Lg.)	4
19	81-0560	Plate — Mounting	1
20	81-0520	Pin — Crankcase	2
*	12-7699	Short Block Assembly	1

* Not Illustrated

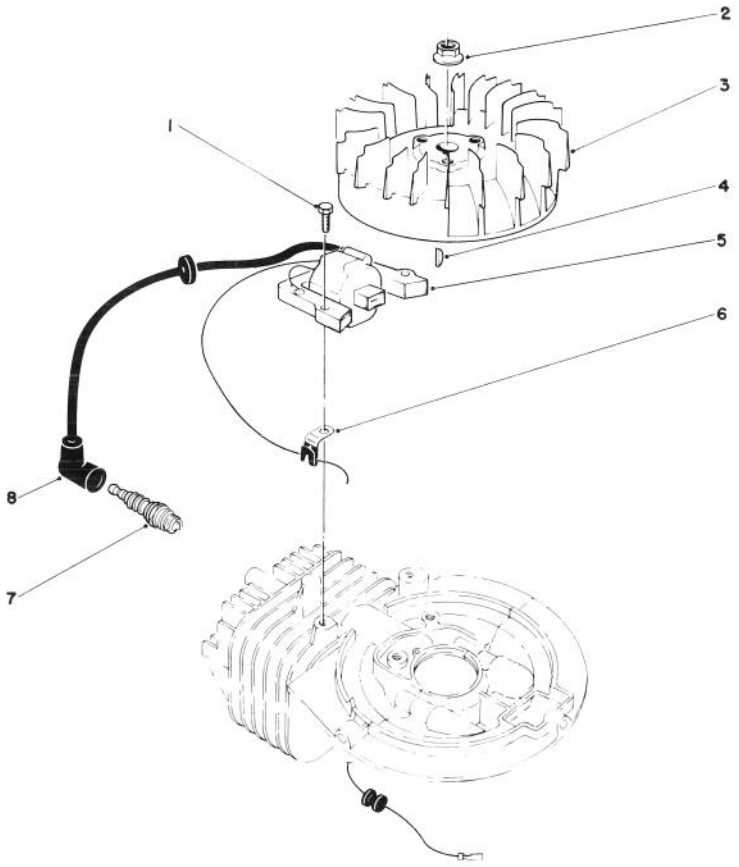

C-0176-90

IGNITION ASSEMBLY (MODEL NO. 47PK9)

Ref. No.	Part No.	Description	No. Used
1	81-5680	Capscrew Hex Hd.	2
2	81-1330	Nut	1
3	81-2810	Flywheel — Magneto	1
4	81-2370	Key — Flywheel	1
5	81-2820	Coil/Ignition Assembly	1

Ref. No.	Part No.	Description	No. Used
6	81-1480	Clamp	1
7	81-0181	Spark Plug	1
8	81-1500	Cover — Spark Plug	1
*	41-7650	Puller — Flywheel	1

* Not Illustrated

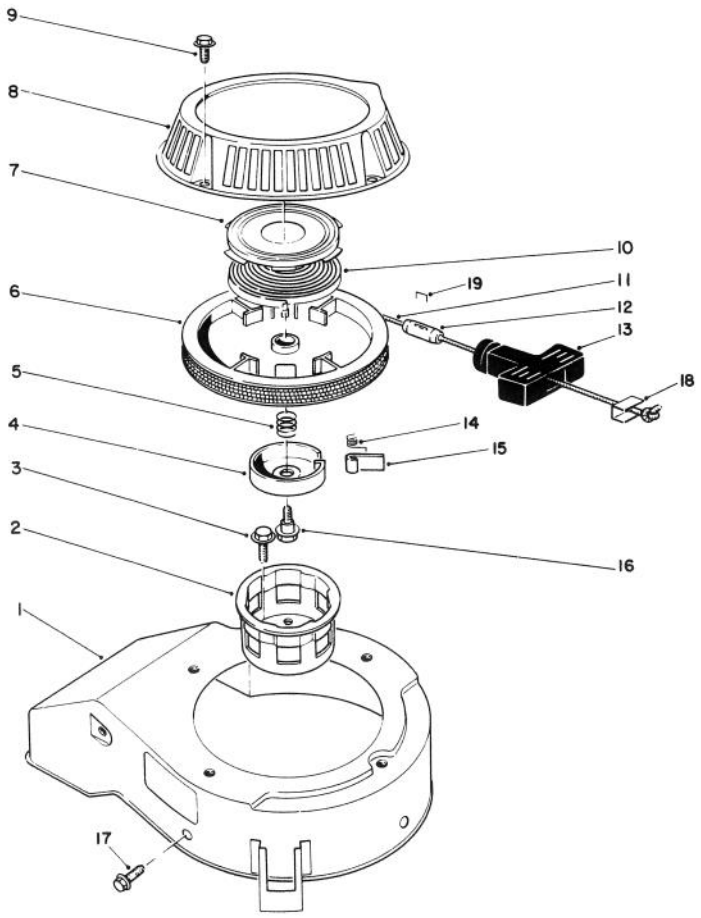

C-0178-90

RECOIL ASSEMBLY (MODEL NO. 47PK9)

Ref. No.	Part No.	Description	No. Used
1	81-2070	Cover — Cooling Fan	1
2	81-1290	Pulley — Starter Cup	1
3	81-1300	Bolt (16mm Lg.)	3
4	81-1250	Retainer — Dog	1
5	81-1240	Spring — Compression	1
6	81-1210	Reel — Rope Pulley	1
7		Retainer Cup — Recoil Spring	1
8	81-2090	Case — Recoil	1
9	81-1280	Bolt	4
10		Spring — Recoil	1
11	81-1270	Rope	1
12	81-3980	Stop — Recoil	1

Ref. No.	Part No.	Description	No. Used
13	81-1630	Handle — Recoil	1
14	81-1220	Spring — Dog	1
15	81-1230	Dog	1
16	81-1260	Bolt — Shoulder	1
17	81-1170	Bolt — Self Tapping (15mm Lg.)	3
18	81-5760	Insert Recoil Handle	1
19†		Staple	1
*	81-2040	Starter Assembly (Incl. Ref. #4-16)	1
*	81-2300	Spring & Retainer (Incl. Ref. #7 & 10)	1

* Not Illustrated
† Obtain Locally

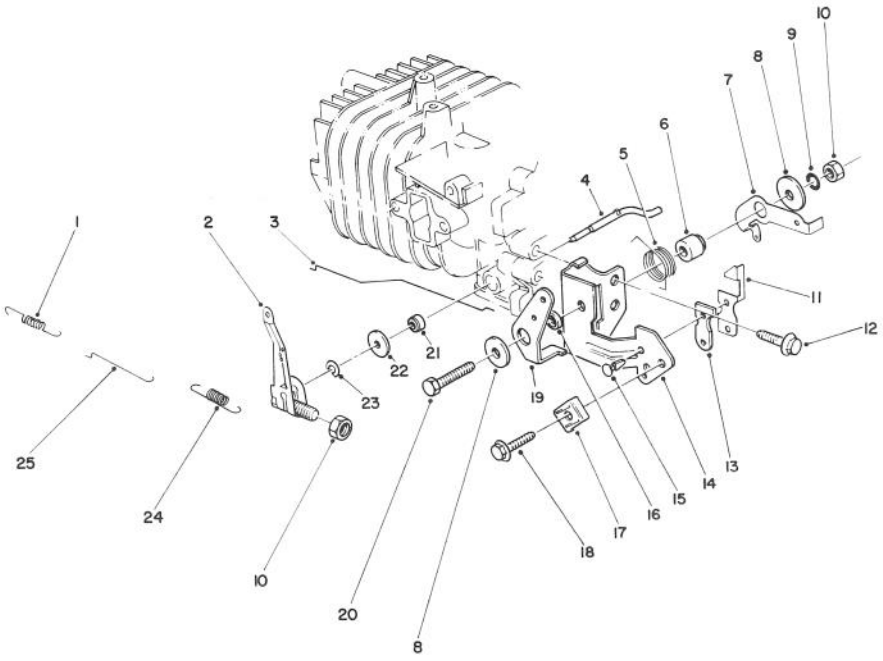

C-0192-90

GOVERNOR ASSEMBLY (MODEL NO. 47PK9)

Ref. No.	Part No.	Description	No. Used
1	81-0920	Spring — Carburetor Rod	1
2	81-5420	Governor Arm/Bolt Assembly	1
3	81-5410	Rod — Choke	1
4	81-0840	Shaft — Governor	1
5	81-2460	Spring — Choke Control Lever	1
6	81-1770	Spacer — Governor Spring Lever	1
7	81-2850	Lever — Governor Spring	1
8	81-1750	Washer — Choke Control Lever	2
9	81-1450	Washer — Lock	1
10	81-0900	Nut	2
11	81-1840	Terminal — Kill Switch	1
12	81-1170	Bolt — Self Tapping (15mm Lg.)	1

Ref. No.	Part No.	Description	No. Used
13	81-1830	Insulator — Kill Switch	1
14	81-2420	Bracket — Throttle Control	1
15	81-1850	Rivet — Kill Switch	2
16	81-2470	Spacer — Choke Control Lever	1
17	81-2430	Clamp — Cable	1
18	50-0130	Bolt — Cable Clamp	1
19	81-1710	Lever — Choke Control	1
20	81-1730	Bolt — Throttle Control Bracket	1
21	81-0850	Oil Seal — Governor Shaft	1
22	81-0860	Washer	1
23	81-0870	E-Ring	1
24	81-2830	Spring — Governor	1
25	81-0910	Rod — Carburetor	1

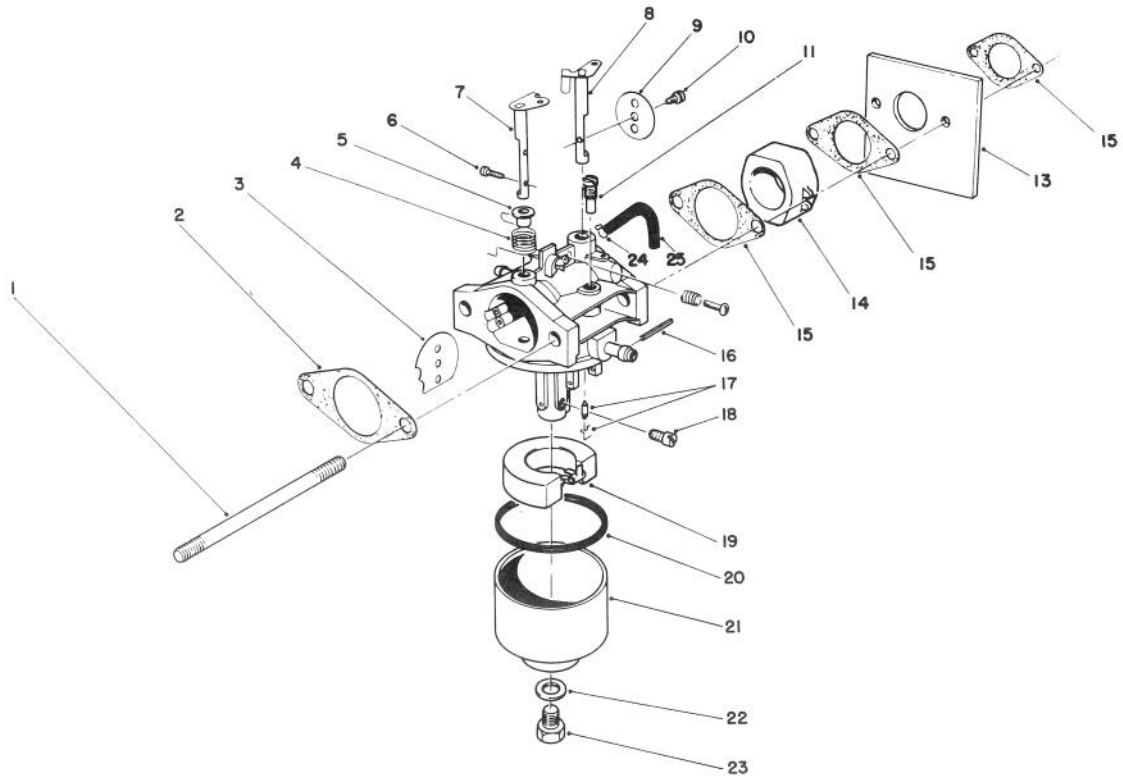

C-0191-90

CARBURETOR ASSEMBLY (MODEL NO. 47PK9)

Ref. No.	Part No.	Description	No. Used
1	81-5450	Stud Bolt — Carburetor	2
2	81-0090	Gasket	1
3	81-0240	Valve — Choke	1
4	81-0230	Spring — Choke	1
5	81-0220	Bushing — Choke Valve	1
6	81-2160	Screw	2
7	81-1950	Shaft — Choke	1
8	81-0250	Shaft — Throttle	1
9	81-0260	Valve — Throttle	1
10	81-0270	Screw — Throttle Valve	1
11	81-1030	Jet — Pilot # (40)	1
13	81-5490	Shield — Carburetor	1
14	81-5440	Insulator — Carburetor	1
15	81-0780	Gasket	3
16	81-2600	Pin	1

Ref. No.	Part No.	Description	No. Used
17	81-4910	Needle Valve/Spring Wire	1
18	81-1060	Jet — Main # (75)	1
*	81-2340	Jet — Main # (72.5) High Alt., Above 6,000 (Optional)	1
19	81-0970	Float	1
20	81-1010	Gasket — Float Bowl	1
21	81-5660	Bowl — Float	1
22	81-1020	Gasket — Bowl Screw	1
23	81-5670	Screw — Bowl	1
*	12-6379	Carburetor Kit (Incl. Ref. #2, 15, 17, 20 & 22)	1
*	81-5430	Carburetor Assembly Complete	1
24	81-5460	Clamp — Vent Tube	1
25	81-5470	Tube — Vent	1

* Not Illustrated

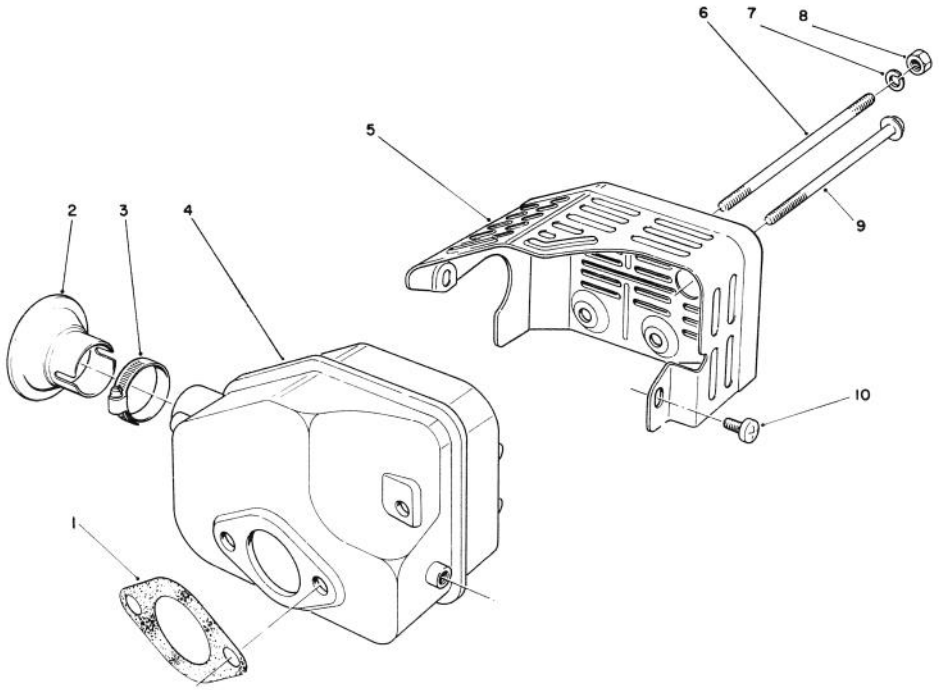

T-0667-90

MUFFLER ASSEMBLY (MODEL NO. 47PK9)

Ref. No.	Part No.	Description	No. Used
1	81-1080	Gasket — Muffler	1
2*	81-0200	Spark Arrester	1
3†		Clamp	1
4	81-5690	Muffler	1
5	81-2450	Cover — Muffler	1

Ref. No.	Part No.	Description	No. Used
6	81-1100	Bolt	2
7	81-1120	Washer — Lock	2
8	81-1110	Nut	2
9	81-1150	Bolt — Self Tapping	1
10	81-1140	Screw — Phillips Hd.	2

* Optional Equipment † Obtain Locally

PRODUCT CHANGES

In an effort to make improvements available to TORO owners as quickly as possible, minor changes are incorporated into Toro's products from time to time that do not become immediately shown in the Parts Catalog. If such a change apparently has been made in your unit, which is not reflected in your manual, see your TORO Distributor or his Authorized TORO Service Dealer for information and part numbers.

IDENTIFICATION AND ORDERING

MODEL AND SERIAL NUMBERS

The Mower has two identification numbers: a model number and a serial number. The two numbers are stamped on a decal which is located on the mower housing between the rear wheels. In any correspondence concerning the mower, supply model and serial numbers to assure that correct information and replacement parts are obtained.

To order replacement parts from an Authorized TORO Service Dealer, supply the following information:

1. Model and serial number of the mower.
2. Part number, description, and quantity of part(s) desired.

Note: Do not order by reference number if a parts catalog is being used; use the PART NUMBER.

The Toro Promise

A TWO YEAR LIMITED WARRANTY

The Toro Company promises to repair your TORO Product if defective in materials or workmanship. The following time periods from the date of purchase apply:

Residential Product ..... 2 Years
Residential Products Used Commercially... 45 Days

The costs of parts and labor are included, but the customer pays the transportation costs. Just return any residential product to an Authorized TORO Service Dealer or TORO Distributor.

Should you feel your TORO Product is defective and wish to rely on The Toro Promise, the following procedure is recommended:

1. Contact any Authorized TORO Service Dealer, TORO Master Service Dealer, or TORO Distributor (the Yellow Pages of your telephone directory is a good reference source).
2. He will either instruct you to return the product to him or recommend another Authorized TORO Service outlet which might be more convenient.
3. Bring the product along with your original sales slip, or other evidence of purchase date, to the service dealer.
4. The servicing dealer will inspect the unit, advise you whether the product is defective and, if so, make all repairs necessary to correct the defect without extra charge to you.

If for any reason you are dissatisfied with the dealer's analysis of the defect or the service performed, you may contact us.

Write:

TORO Consumer Service Department
8111 Lyndale Avenue South
Minneapolis, Minnesota 55420

The above remedy of product defects through repair by an Authorized TORO Service Dealer is the purchaser's sole remedy for any defect.

THERE IS NO OTHER EXPRESS WARRANTY. ALL IMPLIED WARRANTIES OF MERCHANTABILITY AND FITNESS FOR USE ARE LIMITED TO THE DURATION OF THE EXPRESS WARRANTY.

Some states do not allow limitations on how long an implied warranty lasts, so the above limitation may not apply to you.

This warranty applies only to parts or components which are defective and does not cover repairs necessary due to normal wear, misuse, accidents, or lack of proper maintenance. Regular, routine maintenance of the unit to keep it in proper operating condition is the responsibility of the owner.

All warranty repairs reimbursable under The Toro Promise must be performed by an Authorized TORO Service Dealer using Toro approved replacement parts.

Repairs or attemped repairs by anyone other than an Authorized TORO Service Account are not reimbursable under The Toro Promise. In addition, these unauthorized repair attempts may result in additional malfunctions, the correction of which is not covered by warranty.

THE TORO COMPANY IS NOT LIABLE FOR INDIRECT, INCIDENTAL OR CONSEQUENTIAL DAMAGES IN CONNECTION WITH THE USE OF THE PRODUCT INCLUDING ANY COST OR EXPENSE OF PROVIDING SUBSTITUTE EQUIPMENT OR SERVICE DURING PERIODS OF MALFUNCTION OR NON-USE.

Some states do not allow the exclusion or limitation of incidental or consequential damages, so the above limitation or exclusion may not apply to you.

This warranty gives you specific legal rights, and you may also have other rights which vary from state to state.

COUNTRIES OTHER THAN THE UNITED STATES OR CANADA

Customers who have purchased TORO products exported from the United States or Canada should contact their TORO Distributor (Dealer) to obtain guarantee policies for your country, province or state. If for any reason you are dissatisfied with your Distributor's service or have difficulty obtaining guarantee information, contact the TORO importer. If all other remedies fail, you may contact us at The Toro Company.

Compliance with Radio Interference Regulations Certified.
Certifie Conforme au Reglement sur le Brouillage Radioelectrique.

AL-893782-R
Litho U.S.A.

MAINTENANCE RECORD

Date								