Form Number 3355-425 Rev A

CCR™ 2450 GTS®
Snowthrower

Model No. 38516 - 270010001 and up.

Parts Catalog

Ordering Replacement Parts
To order replacement parts, please supply the part number, the quantity, and the description of each part desired.

Understanding Reference Numbers
Each Identified part in an illustration has a reference number. The reference number for a part also appears in the parts list, along with other information about the part.

This catalog uses two special reference number formats, one to indicate parts in a service assembly and another to indicate the quantity of a given part in an illustration.

Service Assembly Reference Numbers
Parts in service assemblies have reference numbers in the form a:b. The a represents the reference number of the entire service assembly and the b represents a sequential number unique to each part within the service assembly.

For example, a wheel assembly might be identified by reference number 6, the tire by 6:1, the valve by 6:2, and the wheel by 6:3. When you order the assembly identified by reference number 6, you receive all parts identified by reference numbers 6:1, 6:2, and 6:3. However, you may also order any part individually. Reference numbers of this type appear in illustrations and in part lists.

Reference Numbers Indicating Quantity
In an illustration, if a reference number indicates more than one part, the reference number has the form nX y. The n represents the quantity of the part, the X is the multiplication symbol, and the y represents the reference number.

For example, in an illustration, the reference number 2X 37 means that two of the parts identified by reference number 37 are indicated.

Register your product at www.Toro.com

© The Toro Company - 2006
All Rights Reserved

Contents

Description	Page
Rotor Housing and Scraper Assembly	3
Impeller Drive Assembly	4
Chute Assembly	5
Rotor Assembly	6
Engine, Gas Tank and Frame Assembly	7
Shroud and Control Panel Assembly	8
Upper Shroud Assembly No. 110-3400	9
Handle Assembly	10
Cylinder, Piston and Connecting Rod Assembly Briggs and Stratton 084133-0196-E8	11
Muffler, Carburetor and Intake Manifold Assembly Briggs and Stratton 084133-0196-E8	12
Flywheel, Blower Housing and Starter Assembly Briggs and Stratton 084133-0196-E8	14
Attachments and Accessories List	15

Part Description Abbreviations

Part descriptions in this catalog may include the following abbreviations.

AR	as required
ASM	assembly
BBC	blade brake clutch
CARR	carriage
DEG	degrees
EXT	external
FH	flat head
GA	gauge
HD	heavy-duty
HF	hex flange
HH	hex head
HHF	hex head flange
HHFTF	hex head flange thread forming
HJ	hex jam
HLH	hex lag head
HOC	height-of-cut
HSBH	hex socket button head
HSFH	hex socket flat head
HSH	hex socket head
HWH	hex washer head
HWHTF	hex washer head thread forming
HYD	hydraulic
LH	left hand
NI	nylon insert
NPTF	national pipe thread fine
PFH	phillips flat head
PPH	phillips pan head
PPHTF	phillips pan head thread forming
PRH	phillips round head
PTH	phillips truss head
PTO	power-take-off
RH	right hand
ROPS	roll-over protection system
SFH	slotted fillister head
SHH	slotted hex head
SHWH	slotted hex washer head
SPH	slotted pan head
SQH	square head
SRH	slotted round head
STD	standard
TAP	self tapping
TTH	torx truss head

Footnotes

❶ Not illustrated

❷ Not serviced separately

❸ Obtain from your local Briggs & Stratton dealer

❹ Included in Carburetor Overhaul Kit (Ref. No. 121)

❺ Included in Carburetor Gasket Set (Ref. No. 977)

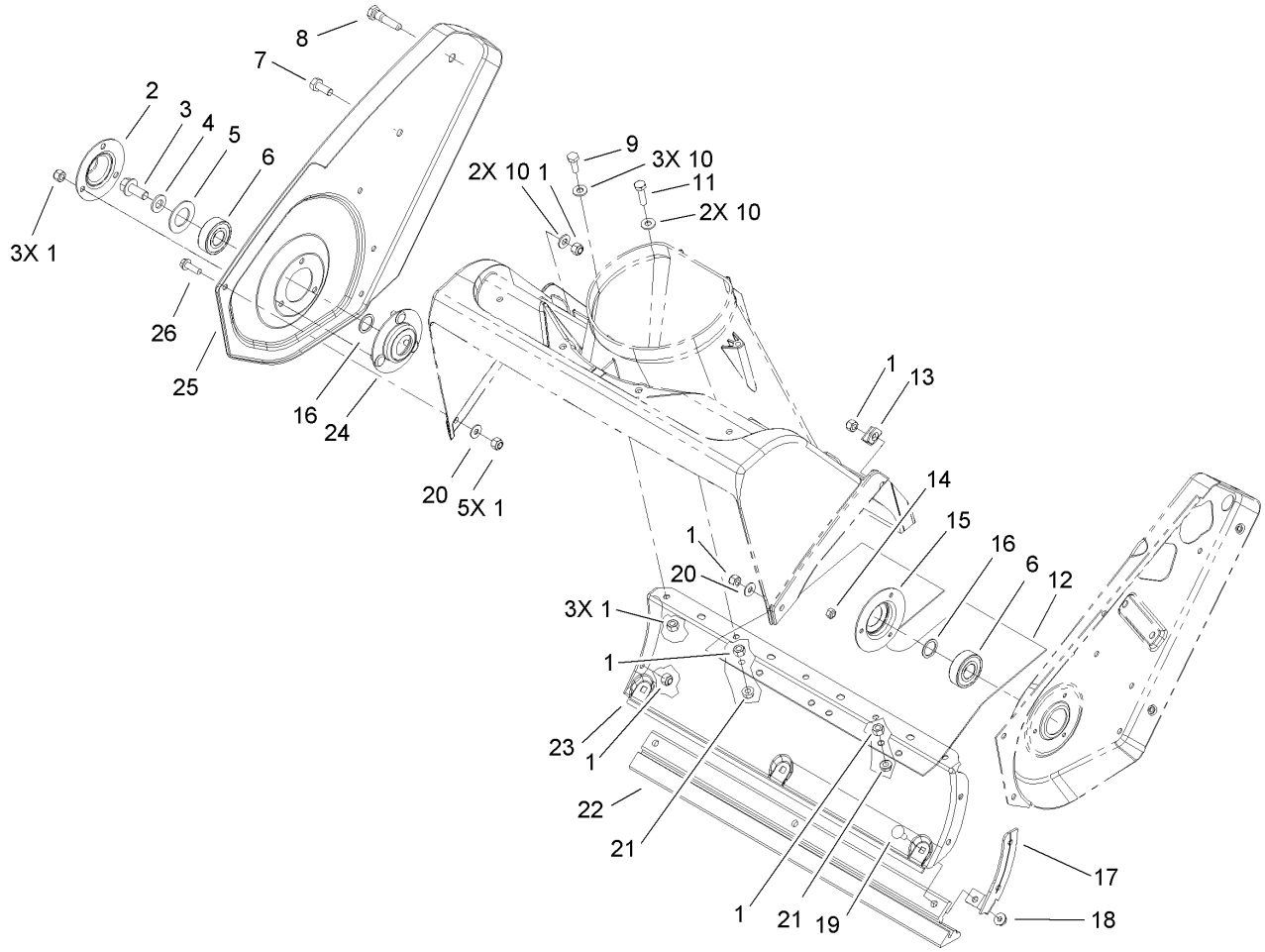

Rotor Housing and Scraper Assembly

Ref	Part No.	Qty.	Description
1	3296-42	17	Nut-Lock, NI
2	52-7290-03	1	Retainer-Bearing
3	3234-25	1	Screw-HHF
4	3256-24	1	Washer-Flat
5	52-7270	1	Washer-Rubber
6	100-1048	2	Bearing-Ball
7	322-43	1	Screw-HH
8	38-8211	1	Pin-Rotor
9	321-4	3	Screw-HH
10	3256-22	7	Washer-Flat
11	321-6	2	Screw-HH
12	55-9512	1	Cover-Bottom
13	55-9430	1	Bracket-Housing
14	3296-2	3	Nut-Lock
15	38-8620	1	Flange-Bearing
16	52-7280	2	Washer-Thrust
17	56-2610	1	Bracket-Housing, Lower
18	32149-2	3	Nut-Keps
19	3229-11	3	Screw-CARR
20	3256-1	2	Washer-Flat
21	32128-10	2	Nut-Lock, HHF
22	55-8760	1	Scraper
23	105-1967-03	1	Housing-Lower
24	52-9110	1	Flange-Bearing

Ref	Part No.	Qty.	Description
25	105-1952-03	1	Sideplate-Right
26	32105-15	5	Screw

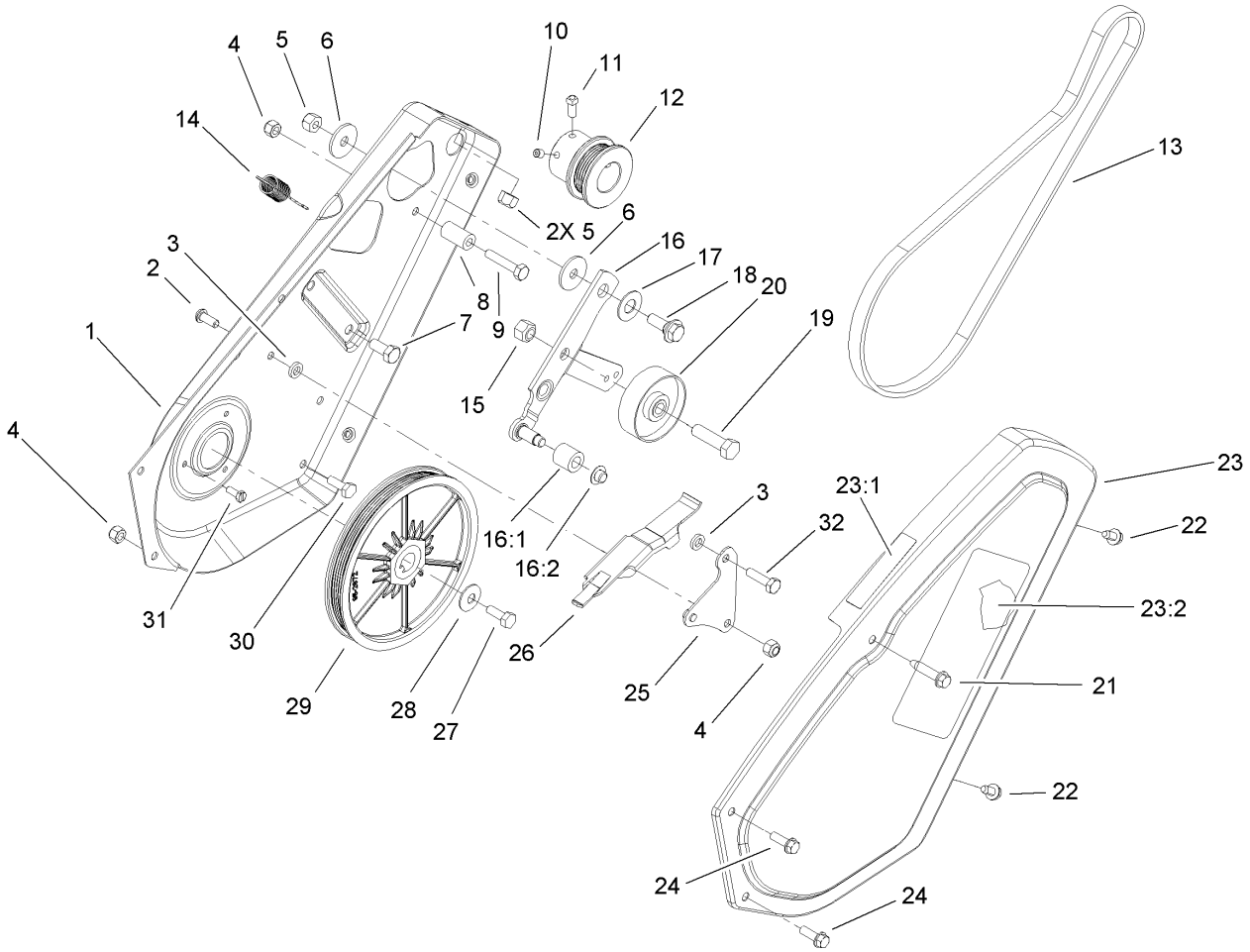

Impeller Drive Assembly

Ref	Part No.	Qty.	Description
1	55-8851-03	1	Plate-Side, LH
2	3274-31	1	Screw-HSBH
3	55-9620	2	Spacer-Plate, Pivot
4	3296-42	3	Nut-Lock, NI
5	3296-29	3	Nut-Lock, NI
6	5-4460	2	Washer-Pivot
7	322-3	2	Screw-HH
8	55-9530	1	Sleeve-Guide, Belt
9	321-13	1	Screw-HH
10	3245-32	1	Screw-HSH
11	3241-7	1	Screw-SQH
12	95-2673	1	Pulley-Engine
13	95-6151	1	Belt-Drive
14	55-9280	1	Spring-Extension
15	32152-2	1	Nut-Lock, Cone
16	105-3542	1	Idler Arm ASM
16:1	55-9520	1	Roller-Brake
16:2	32112-11	1	Nut-Push
17	25-5641	1	Washer
18	27-0410	1	Screw-Shoulder
19	323-29	1	Screw-HH
20	55-9290	1	Pulley-Idler
21	32144-110	1	Screw-HWH
22	12-3270	2	Screw

Ref	Part No.	Qty.	Description
23	105-1997	1	Cover-Drive
23:1	104-2767	1	Decal-Warning
23:2	60-9480	1	Decal
24	32105-15	2	Screw
25	55-9570	1	Pivot Plate ASM
26	55-9550	1	Brake-Arm
27	321-30	1	Screw-HH
28	3290-456	1	Washer-Belleville
29	95-2672	1	Pulley Rotor ASM
30	321-4	2	Screw-HH
31	32105-8	3	Screw-SHH
32	321-6	1	Screw-HH

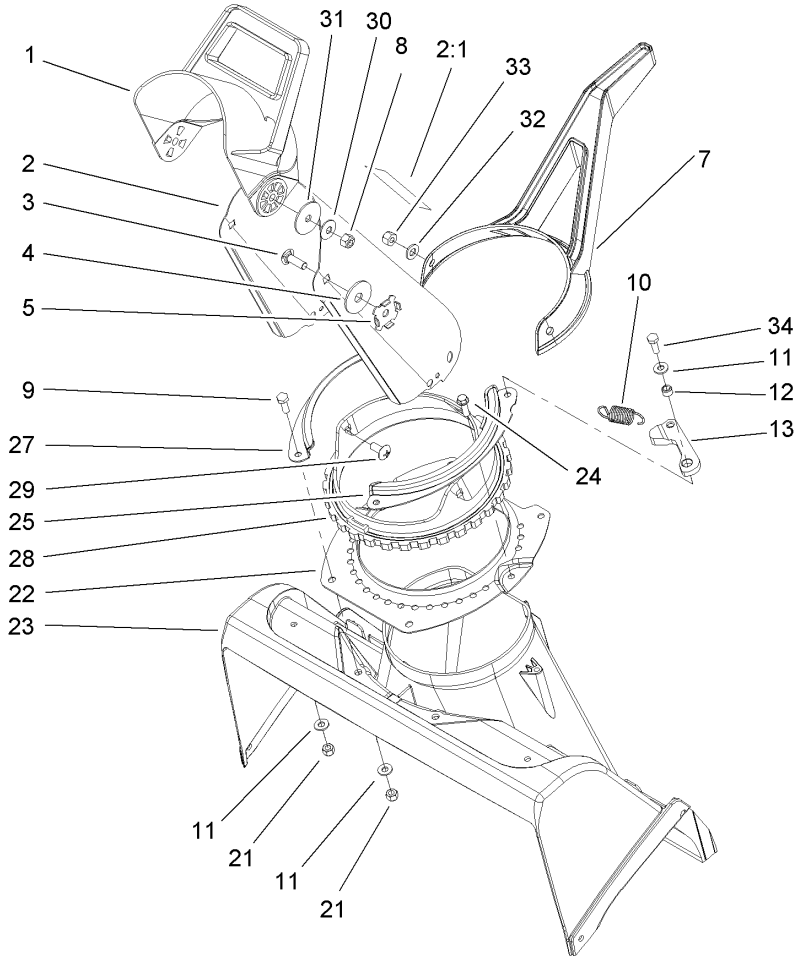

Chute Assembly

Ref	Part No.	Qty.	Description
1	56-2680	1	Chute-Deflector
2	104-4115	1	Chute ASM
2:1	104-4135	1	Decal-Danger
3	3230-22	2	Screw-CARR
4	20-4320	2	Washer-Rubber
5	55-8950	2	Plate-Friction
7	94-9914	1	Handle-Control, Chute
8	3296-29	2	Nut-Lock, NI
9	321-4	3	Screw-HH
10	80-4600	1	Spring-Extension
11	3256-22	5	Washer-Flat
12	55-9370	1	Spacer-Blade, Rotor
13	80-4610	1	Detent
21	3296-42	6	Nut-Lock, NI
22	55-8921-03	1	Ring-Support, Chute
23	105-1950	1	Housing-Rotor, Upper
24	46-8091	2	Screw-HWH
25	71-4980-03	1	Retainer-Chute, LH
27	71-4990-03	1	Retainer-Chute, RH
28	104-2763	1	Ring-Chute
29	100-5487	3	Screw-PTH
30	3290-456	2	Washer-Belleville
31	3256-68	2	Washer-Flat
32	3256-70	3	Washer-Flat

Ref	Part No.	Qty.	Description
33	3296-47	3	Nut-Lock, NI
34	321-6	1	Screw-HH

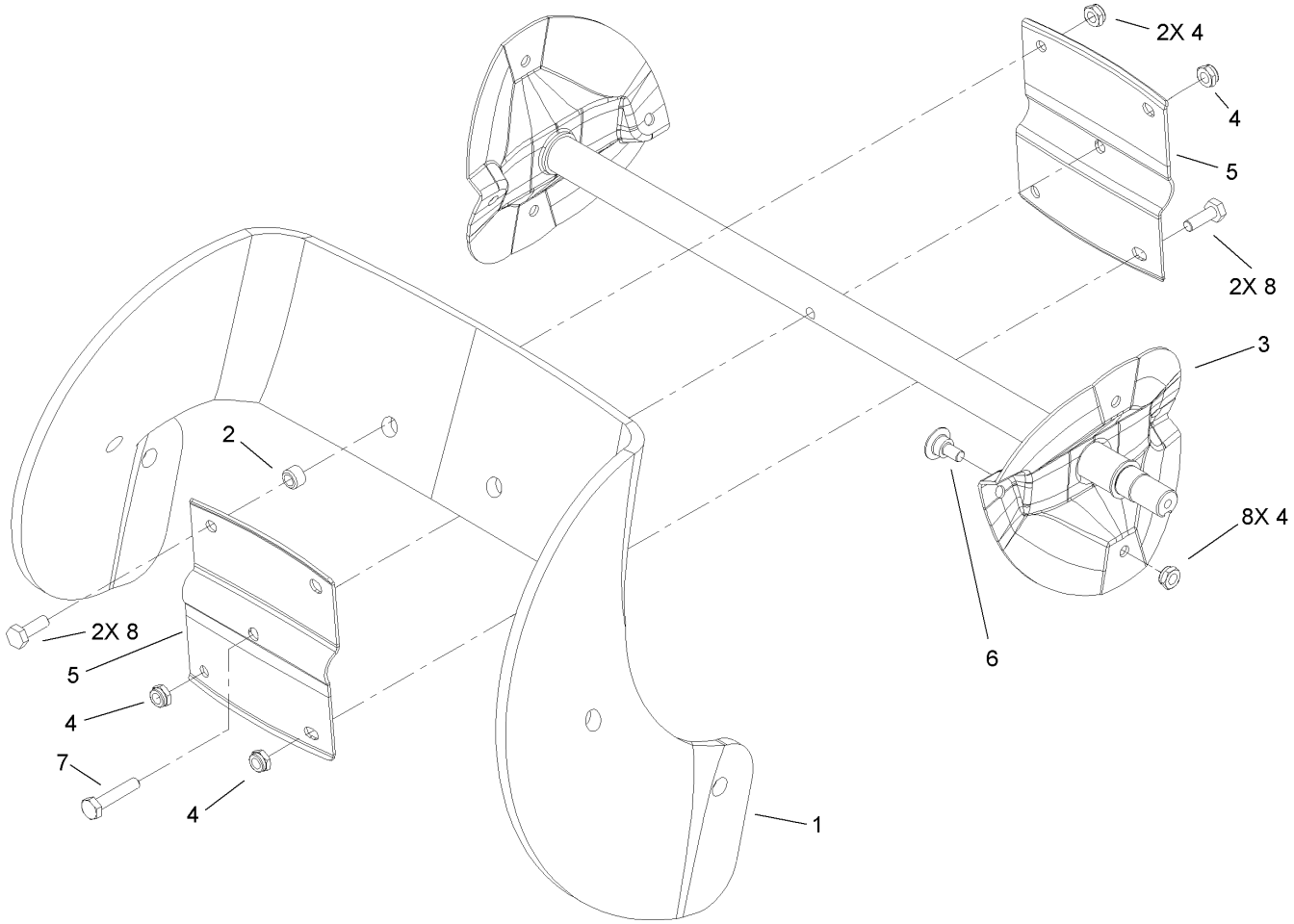

Rotor Assembly

Ref	Part No.	Qty.	Description
1	99-9313	2	Blade-Rotor
2	55-9370	4	Spacer-Blade, Rotor
3	100-5478-03	1	Rotor ASM
4	3296-56	13	Nut-Lock, NI
5	66-6600-03	2	Half-Rotor
6	84-1971	8	Screw
7	321-8	1	Screw-HH
8	321-4	4	Screw-HH

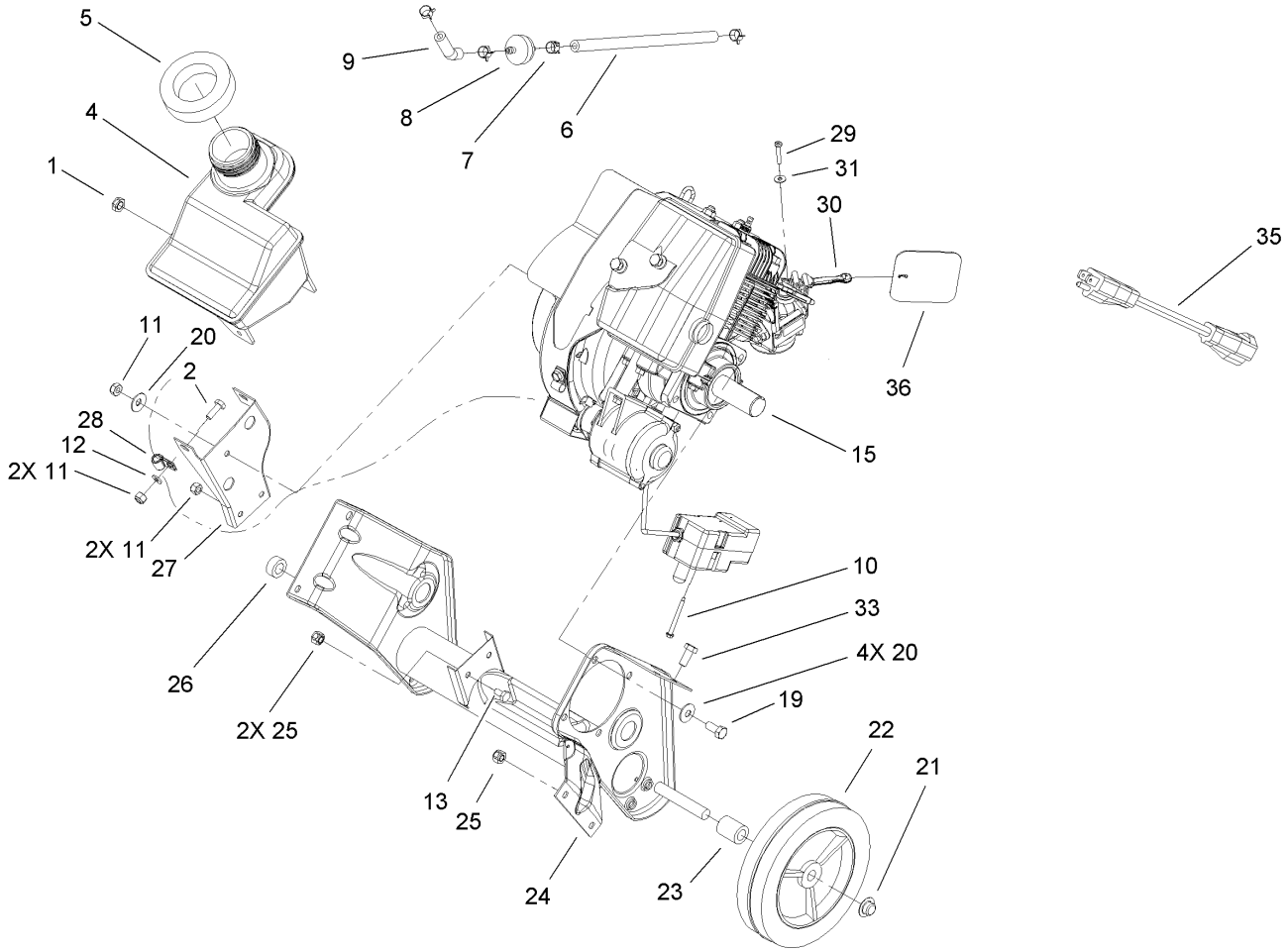

Engine, Gas Tank and Frame Assembly

Ref	Part No.	Qty.	Description
1	32152-8	1	Nut-Lock, Cone
2	321-4	2	Screw-HH
4	105-8952	1	Tank-Gas
5	55-9310	1	Seal-Foam
6	110-4894	1	Hose-Fuel
7	2412-98	4	Clamp
8	56-6360	1	Filter-Fuel
9	109-0304	1	Hose-Fuel
10	32144-27	3	Screw-Plastite
11	3296-42	5	Nut-Lock, NI
12	3256-22	2	Washer-Flat
13	321-2	2	Screw-HH
❷❸15		1	Engine-Briggs And Stratton, 084133-0196-E8
19	322-3	4	Screw-HH
20	3290-456	5	Washer-Belleville
21	32112-14	2	Nut-Push
22	66-6510	2	Wheel
23	66-6501	1	Spacer-Wheel
24	105-1965-03	1	Frame
25	3296-29	3	Nut-Lock, NI
26	66-6500	1	Spacer-Wheel
27	105-1968-03	1	Bracket-Support, Recoil
28	2412-91	1	Clamp

Ref	Part No.	Qty.	Description
29	32144-97	1	Screw-PPH, Plastite
30	104-0878	1	Lever-Choke
31	3256-14	1	Washer-Flat
33	322-43	2	Screw-HH
35	99-9300	1	Cord-Extension
36	110-3444	1	Shield-Choke Hole

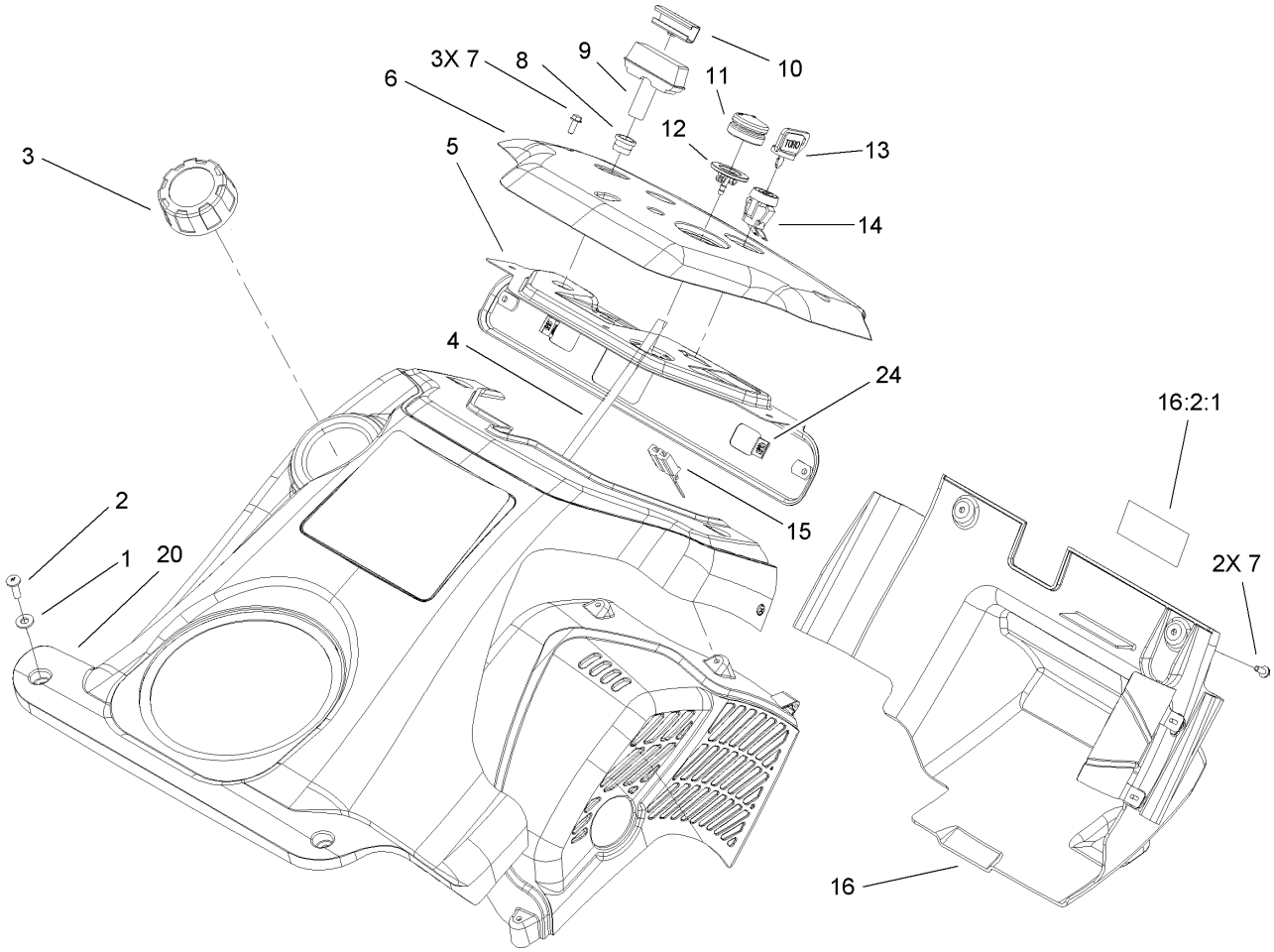

Shroud and Control Panel Assembly

Ref	Part No.	Qty.	Description
1	3256-22	2	Washer-Flat
2	3250-32	2	Screw-PPH
3	104-4133	1	Gas Cap ASM
4	98-1372	1	Hose-Primer
5	105-1999-03	1	Panel-Support, Control
6	105-3523	1	Panel-Control
7	32144-112	5	Screw-HWH
8	55-9410	1	Guide-Rope, Starter
9	612825	1	Handle-Start
10	612824	1	Clip-Starter
11	66-7460	1	Bulb-Primer
12	44-2750	1	Body-Primer
13	63-8360	1	Key-Ignition
14	40-5940	1	Switch
15	218-532	1	Connector-Body
16	108-7339	1	Lower Shroud And Baffle ASM
❶❷16:2		1	Shroud-Lower
16:2:1	61-4790	1	Decal
20	110-3400	1	Upper Shroud ASM
24	100-9889	2	Nut-Speed

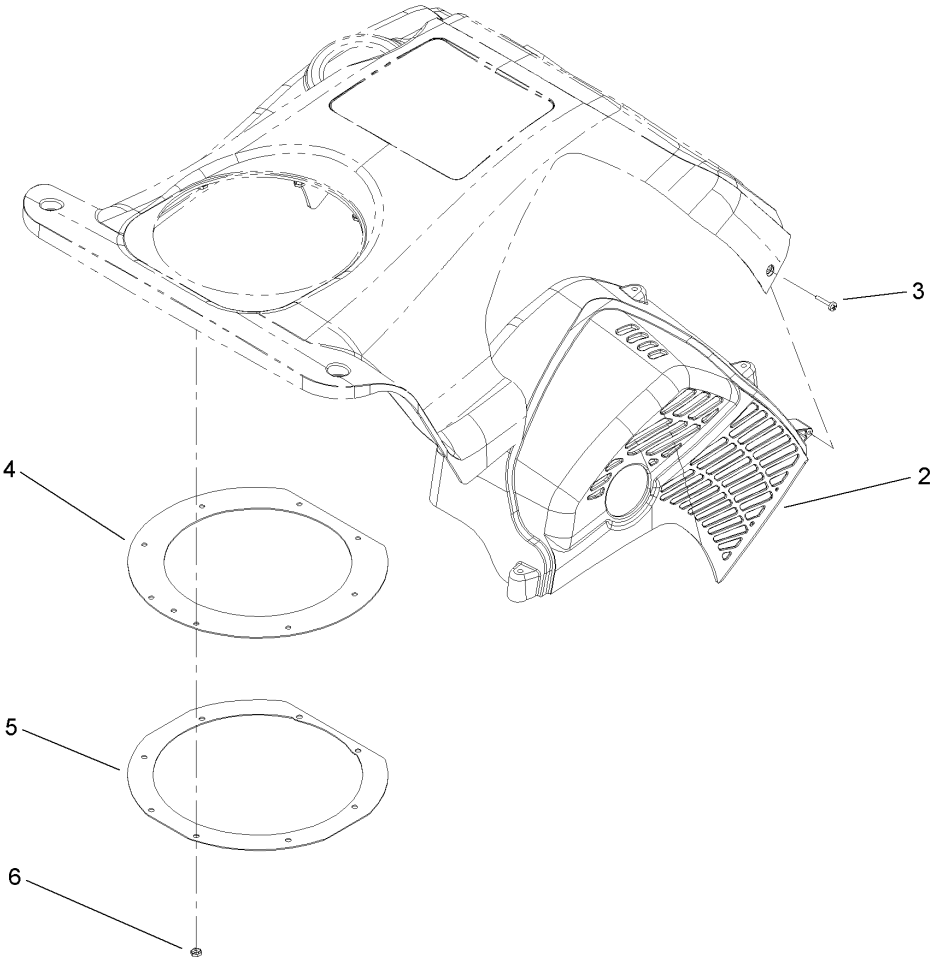

Upper Shroud Assembly No. 110-3400

Ref	Part No.	Qty.	Description
2	108-7333	1	Shield-Heat
3	94-4496	5	Screw-PPH
4	105-3543	1	Seal-Chute
5	55-9540-03	1	Retainer-Seal, Chute
6	3290-474	8	Palnut

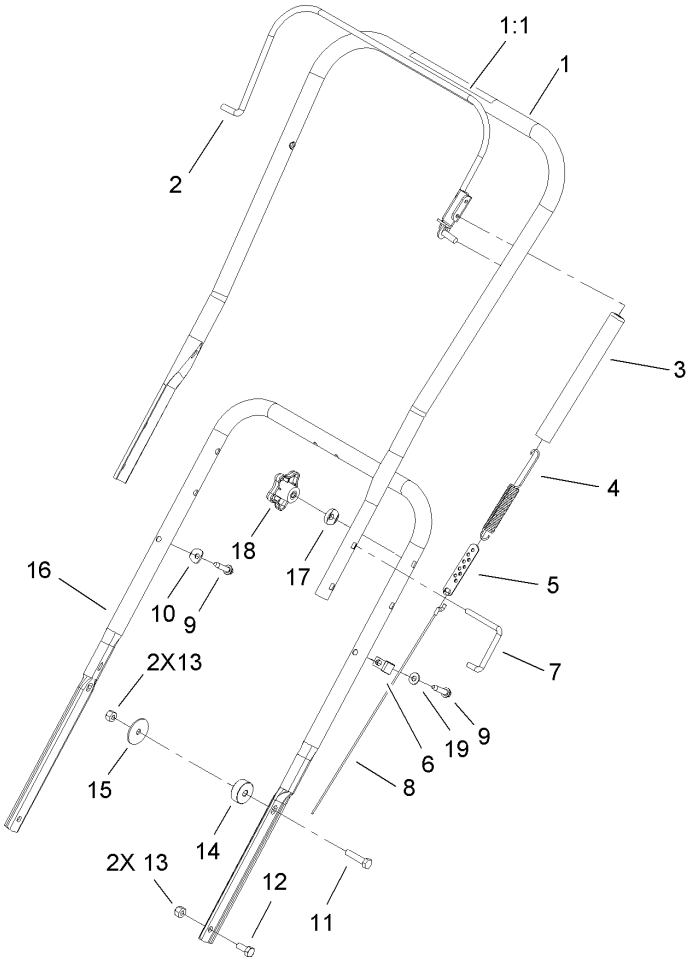

Handle Assembly

Ref	Part No.	Qty.	Description
1	95-2667	1	Handle-Upper
1:1	104-2775	1	Decal-Drive, Rotor
2	71-5120-03	1	Bail ASM
3	71-5530	1	Cover-Spring
4	71-5480	1	Spring-Clutch
5	71-5330	1	Adjuster-Cable, Clutch
6	2412-91	1	Clamp
7	98-2266	2	Lock-Handle
8	110-3437	1	Cable-Clutch
9	32144-110	2	Screw-HWH
10	3-7501	1	Washer
11	322-6	2	Screw-HH
12	322-3	2	Screw-HH
13	3296-29	4	Nut-Lock, NI
14	105-1961	2	Spacer
15	3256-68	2	Washer-Flat
16	55-9121-03	1	Handle-Lower
17	107-3844	2	Washer
18	106-4161	2	Knob-Handle
19	3256-22	1	Washer-Flat

1036 EMISSIONS LABEL

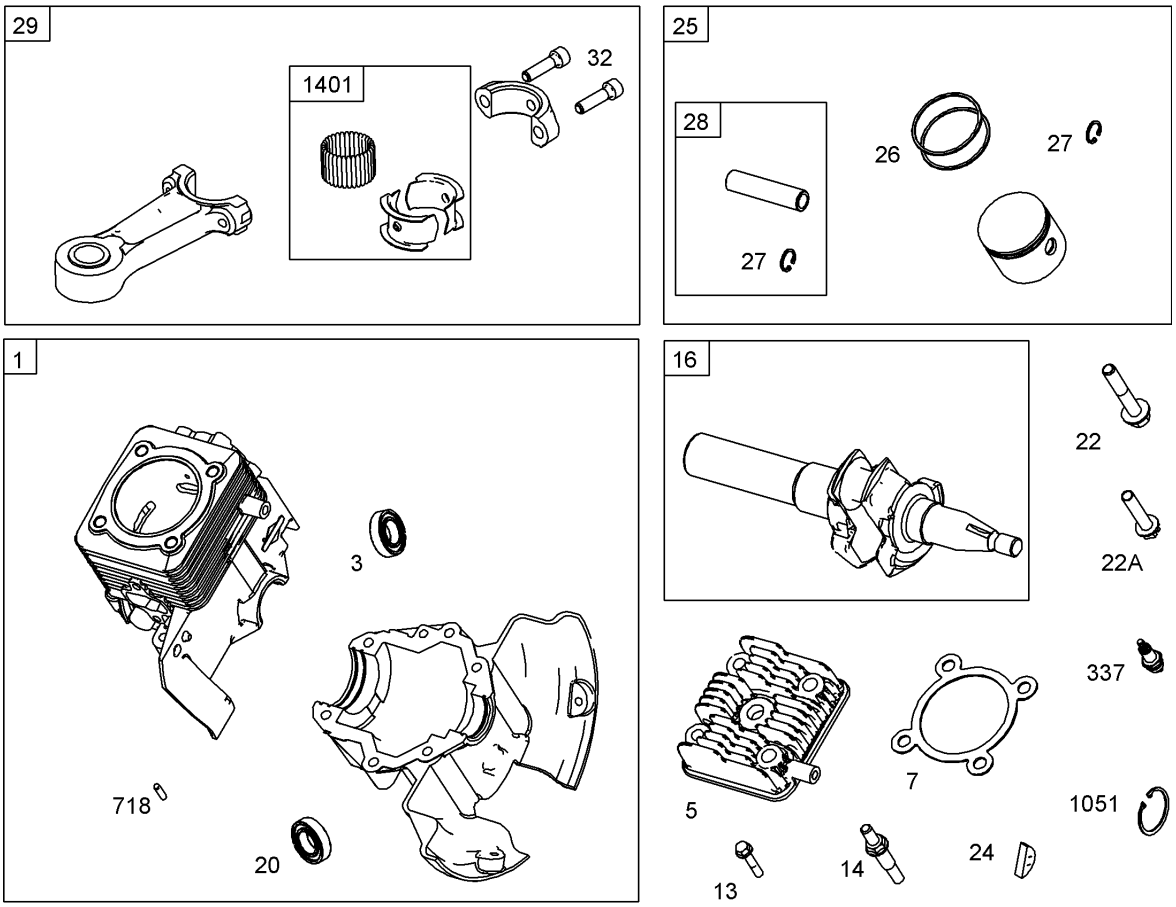

Cylinder, Piston and Connecting Rod Assembly
Briggs and Stratton 084133-0196-E8

Ref	Part No.	Qty.	Description
❶1	801322	1	Cylinder ASM (Non Boost, Electric Start)
❸3	801262	1	Seal-Oil (Magneto Side)
❸5	801283	1	Head-Cylinder
❸7	801263	1	Gasket-Head, Cylinder
❸13	801264	1	Screw (Cyilnder Head)
❸14	801265	1	Stud (Cyilnder Head)
❸16	801220	1	Crankshaft
❸20	801261	1	Seal-Oil (PTO Side)
❸22	801266	1	Screw (Crankcase Cover/ Sump)
❸22A	801271	1	Screw (Crankcase Cover/ Sump)
❸24	801234	1	Key-Flywheel
❸25	801279	1	Piston ASM
❸26	801280	1	Ring Set
❸27	801275	1	Lock-Pin, Piston
❸28	801276	1	Pin-Piston
❸29	801277	1	Rod-Connecting
❸32	801278	1	Screw (Connecting Rod)
❸337	801254	1	Plug-Spark
❸718	690959	1	Pin-Locating
❸1051	801274	1	Ring-Retaining
❸1036		1	Label-Emissions (Available From An Authorized Briggs And Stratton Service Dealer)
❸1401	801290	1	Roller-Strip

Muffler, Carburetor and Intake Manifold Assembly
Briggs and Stratton 084133-0196-E8

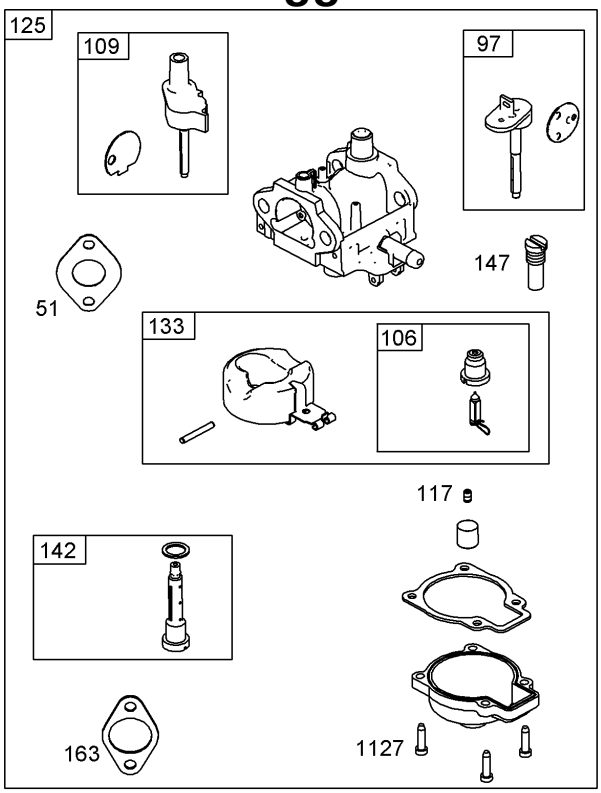

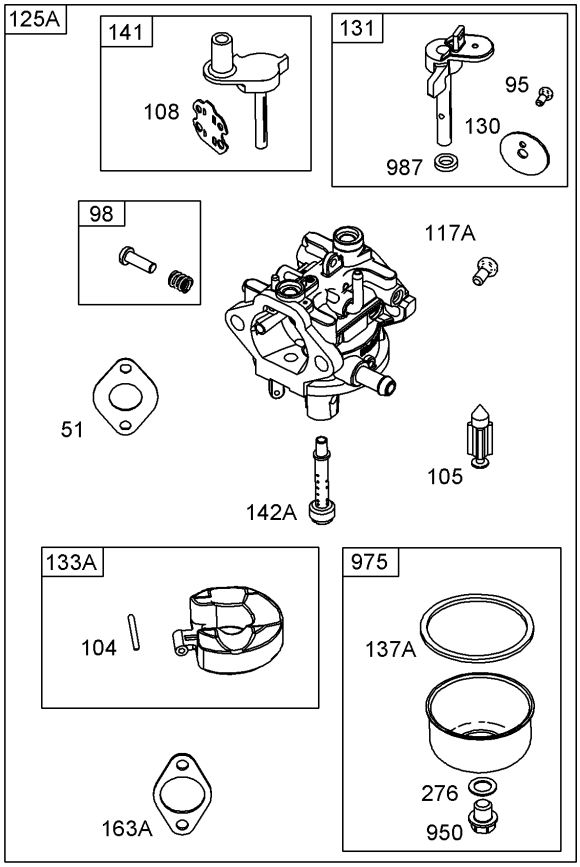

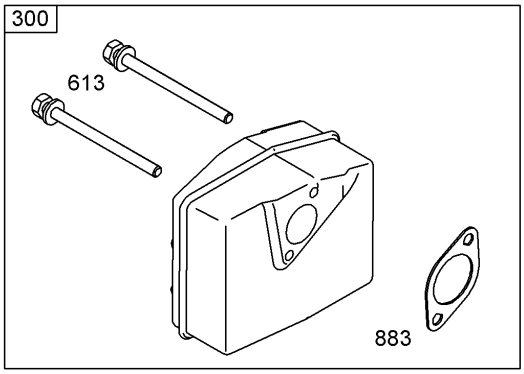

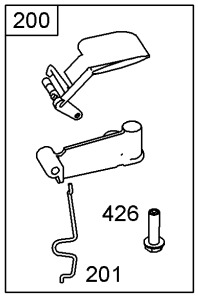

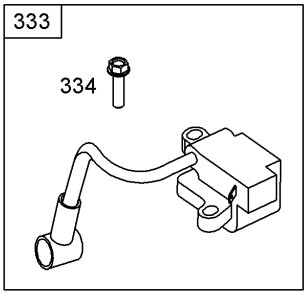

977 CARBURETOR GASKET SET

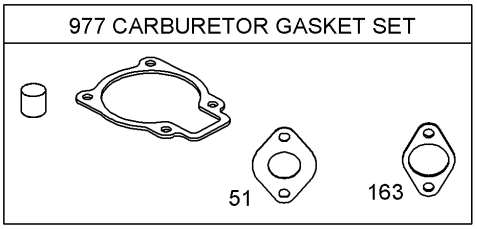

121 CARBURETOR OVERHAUL KIT

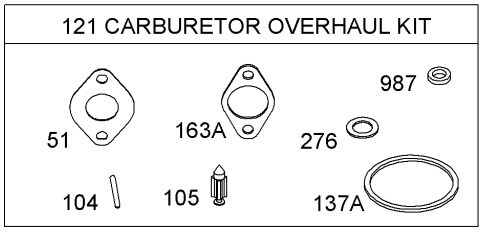

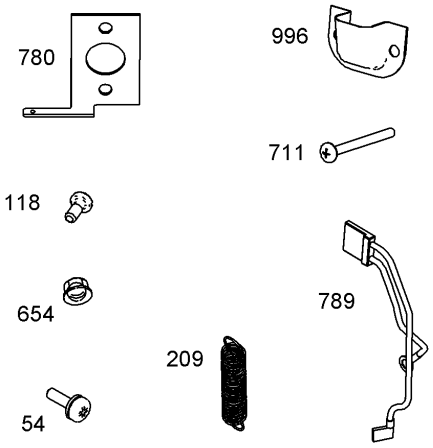

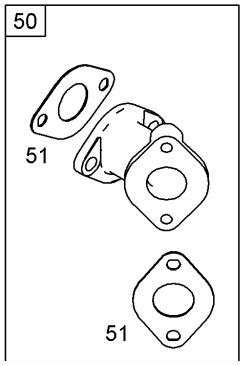

Muffler, Carburetor and Intake Manifold Assembly
Briggs and Stratton 084133-0196-E8

Ref	Part No.	Qty.	Description
❸50	801232	1	Manifold-Intake
❸❹51 ❺	801224	1	Gasket-Intake
❸54	801230	1	Screw (Intake Manifold)
❸95	801415	1	Screw (Throttle Valve) (Used After Code Date 06060600)
❸97	801306	1	Shaft-Throttle (Used Before Code Date 06060700)
❸98	801419	1	Idle Speed Kit (Used After Code Date 06060600)
❸❹104	691242	1	Pin-Hinge, Float (Used After Code Date 06060600)
❸❹105	801423	1	Valve-Needle, Float (Used After Code Date 06060600)
❸106	801317	1	Seat-Inlet (Used Before Code Date 06060700)
❸108	801413	1	Valve-Choke (Used After Code Date 06060600)
❸109	801307	1	Shaft-Choke (Used Before Code Date 06060700)
❸117	801310	1	Jet-Main (Standard) (Used Before Code Date 06060700)
❸117A	801425	1	Jet-Main (Used After Code Date 06060600)
❸118	801426	1	Jet-Main (Used After Code Date 06060600)
❸121	801427	1	Carburetor Overhaul Kit (Used After Code Date 06060600)
❸125	801233	1	Carburetor (Used Before Code Date 06060700)
❸125A	801396	1	Carburetor (Used After Code Date 06060600)
❸130	801414	1	Valve-Throttle (Used After Code Date 06060600)
❸131	801417	1	Throttle Shaft Kit (Used After Code Date 06060600)
❸133	801316	1	Float-Carburetor (Used Before Code Date 06060700)
❸133A	801422	1	Float-Carburetor (Used After Code Date 06060700)
❸❹137A	693981	1	Gasket-Bowl, Float (Used After Code Date 06060600)
❸141	801418	1	Choke Shaft Kit (Used After Code Date 06060600)
❸142	801313	1	Nozzle-Carburetor (Used Before Code Date 06060700)
❸142A	801424	1	Nozzle-Carburetor (Used After Code Date 06060600)
❸147	801308	1	Jet-Pilot (Used Before Code Date 06060700)
❸❺163	801227	1	Gasket-Cleaner, Air (Used Before Code Date 06060700)
❸❹163A	801397	1	Gasket-Cleaner, Air (Used After Code Date 06060600)
❸200	801289	1	Blade-Governor
❸201	801225	1	Link-Vane, Air
❸209	801223	1	Spring-Governor
❸❹276	692255	1	Washer-Sealing (Used After Code Date 06060600)
❸300	801250	1	Muffler

Ref	Part No.	Qty.	Description
❸333	801268	1	Armature-Magneto
❸334	801267	1	Screw (Magneto Armature)
❸426	801231	1	Screw (Governor Blade)
❸613	801251	1	Screw (Muffler)
❸654	801324	1	Nut (Intake Manifold) (Used Before Code Date 05042600)
❸711	801229	1	Screw (Carburetor Shield)
❸780	801228	1	Anchor-Spring
❸789	801253	1	Wire ASM
❸883	801252	1	Gasket-Exhaust
❸950	801421	1	Screw-Bowl, Float (Used After Code Date 06060600)
❸975	801420	1	Bowl-Float (Used After Code Date 06060600)
❸977	801312	1	Gasket Set-Carburetor (Used Before Code Date 06060700)
❸❹987	801416	1	Seal-Shaft, Throttle (Used After Code Date 06060600)
❸996	801226	1	Shield-Carburetor
❸1127	801318	1	Screw (Float Bowl) (Used Before Code Date 06060700)

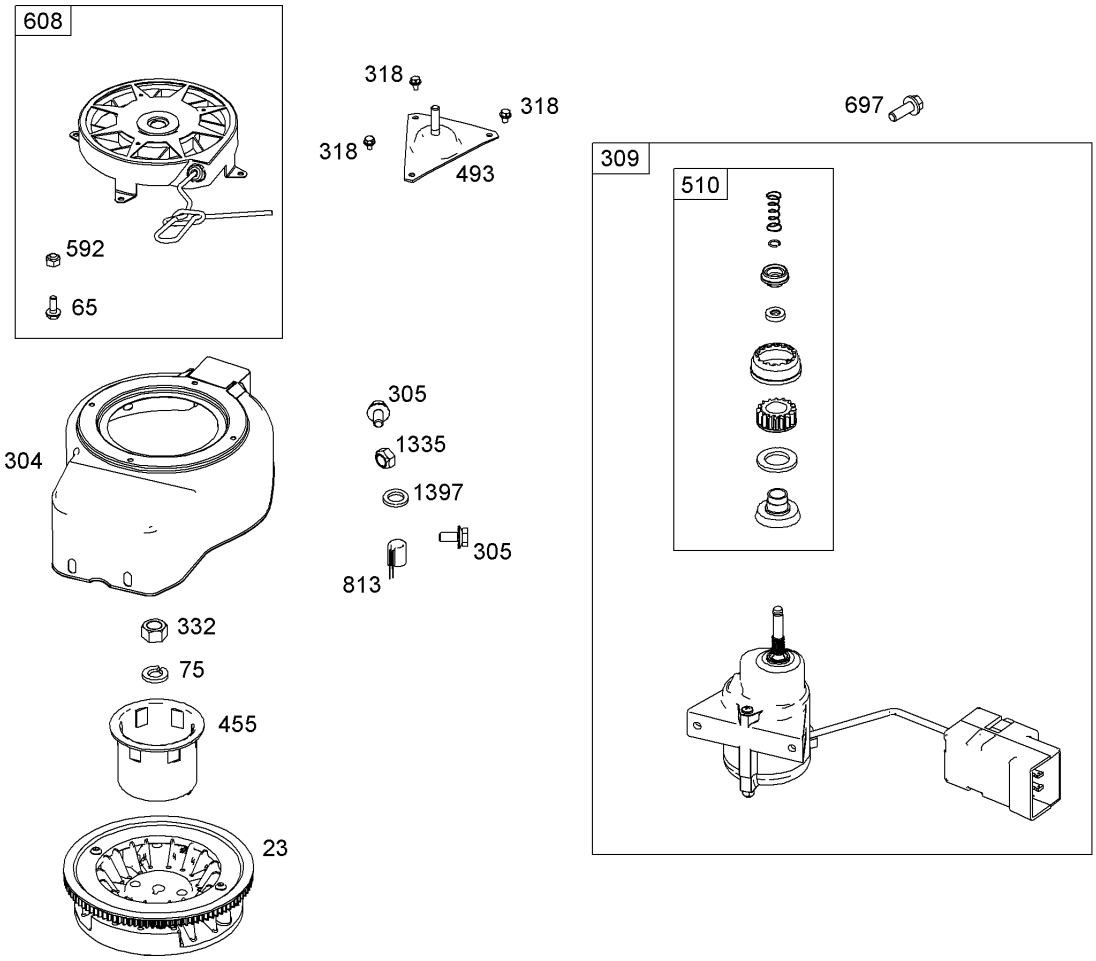

Flywheel, Blower Housing and Starter Assembly
Briggs and Stratton 084133-0196-E8

Ref	Part No.	Qty.	Description
❸23	801246	1	Flywheel
❸65	801243	1	Screw (Rewind Starter)
❸75	801237	1	Washer (Flywheel)
❸304	801236	1	Housing-Blower
❸305	801239	1	Screw (Blower Housing)
❸309	801247	1	Motor-Starter
❸318	801241	1	Screw (Mounting Bracket)
❸332	801238	1	Nut (Flywheel)
❸455	801235	1	Cup-Flywheel
❸493	801240	1	Bracket-Mounting
❸510	801293	1	Drive-Starter
❸592	801244	1	Nut (Rewind Starter)
❸608	801242	1	Starter-Rewind
❸697	801248	1	Screw (Starter Motor)
❸813	801249	1	Clamp
❸1335	801269	1	Nut (Blower Housing)
❸1397	801270	1	Washer (Blower Housing)

Attachments and Accessories

For 38516 - CCR 2450 GTS Snowthrower

Product Name	Model/Part
Lower Shroud Replacement Kit	108-7338
Snow Cab	88-0600

TORO®