Form Number 3355-429 Rev A

CCR™ 3650 GTS®
Snowthrower

Model No. 38517 - 270010001 and up.

Parts Catalog

Ordering Replacement Parts

To order replacement parts, please supply the part number, the quantity, and the description of each part desired.

Understanding Reference Numbers

Each Identified part in an illustration has a reference number. The reference number for a part also appears in the parts list, along with other information about the part.

This catalog uses two special reference number formats, one to indicate parts in a service assembly and another to indicate the quantity of a given part in an illustration.

Service Assembly Reference Numbers

Parts in service assemblies have reference numbers in the form a:b. The a represents the reference number of the entire service assembly and the b represents a sequential number unique to each part within the service assembly.

For example, a wheel assembly might be identified by reference number 6, the tire by 6:1, the valve by 6:2, and the wheel by 6:3. When you order the assembly identified by reference number 6, you receive all parts identified by reference numbers 6:1, 6:2, and 6:3. However, you may also order any part individually. Reference numbers of this type appear in illustrations and in part lists.

Reference Numbers Indicating Quantity

In an illustration, if a reference number indicates more than one part, the reference number has the form nX y. The n represents the quantity of the part, the X is the multiplication symbol, and the y represents the reference number.

For example, in an illustration, the reference number 2X 37 means that two of the parts identified by reference number 37 are indicated.

© The Toro Company - 2006
All Rights Reserved

Register your product at www.Toro.com

Contents

Description	Page
Rotor Housing and Scraper Assembly	3
Impeller Drive Assembly	4
Chute Assembly	5
Rotor Assembly	6
Engine, Gas Tank and Frame Assembly	7
Shroud and Control Panel Assembly	8
Upper Shroud Assembly No. 110-2188	9
Handle Assembly	10
Cylinder, Piston and Connecting Rod Assemblies Briggs and Stratton 084232-0121-E8	11
Muffler, Carburetor and Intake Manifold Assembly Briggs and Stratton 084232-0121-E8	12
Flywheel, Blower Housing and Starter Assemblies Briggs and Stratton 084232-0121-E8	13
Attachments and Accessories List	14

Part Description Abbreviations

Part descriptions in this catalog may include the following abbreviations.

AR	as required
ASM	assembly
BBC	blade brake clutch
CARR	carriage
DEG	degrees
EXT	external
FH	flat head
GA	gauge
HD	heavy-duty
HF	hex flange
HH	hex head
HHF	hex head flange
HHFTF	hex head flange thread forming
HJ	hex jam
HLH	hex lag head
HOC	height-of-cut
HSBH	hex socket button head
HSFH	hex socket flat head
HSH	hex socket head
HWH	hex washer head
HWHTF	hex washer head thread forming
HYD	hydraulic
LH	left hand
NI	nylon insert
NPTF	national pipe thread fine
PFH	phillips flat head
PPH	phillips pan head
PPHTF	phillips pan head thread forming
PRH	phillips round head
PTH	phillips truss head
PTO	power-take-off
RH	right hand
ROPS	roll-over protection system
SFH	slotted fillister head
SHH	slotted hex head
SHWH	slotted hex washer head
SPH	slotted pan head
SQH	square head
SRH	slotted round head
STD	standard
TAP	self tapping
TTH	torx truss head

Footnotes

❶ Not serviced separately

❷ Obtain from your local Briggs & Stratton dealer

❸ Included in Carburetor Gasket Set (Ref. No. 977)

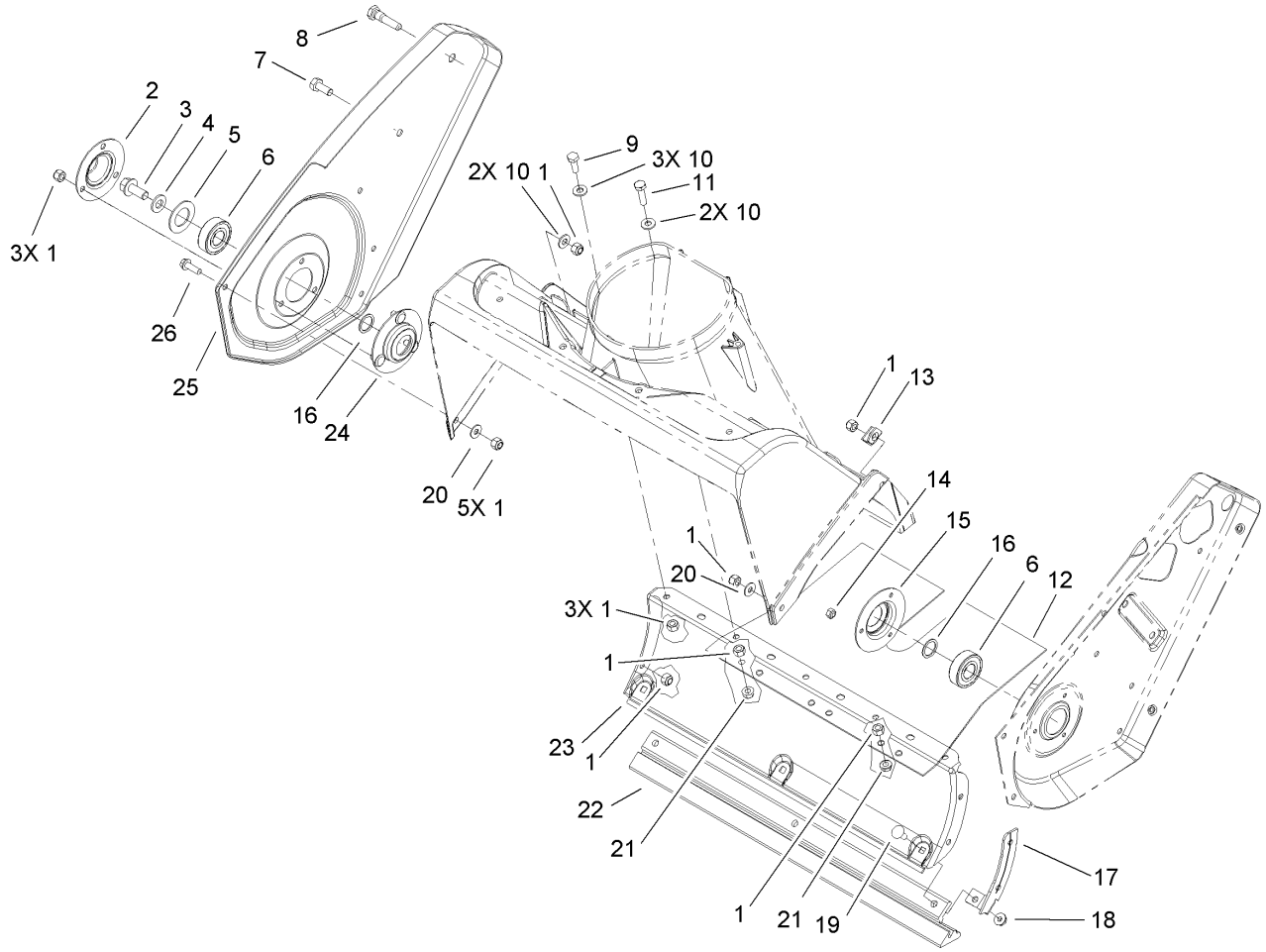

Rotor Housing and Scraper Assembly

Ref	Part No.	Qty.	Description
1	3296-42	17	Nut-Lock, NI
2	52-7290-03	1	Retainer-Bearing
3	3234-25	1	Screw-HHF
4	3256-24	1	Washer-Flat
5	52-7270	1	Washer-Rubber
6	100-1048	2	Bearing-Ball
7	322-43	1	Screw-HH
8	38-8211	1	Pin-Rotor
9	321-4	3	Screw-HH
10	3256-22	7	Washer-Flat
11	321-6	2	Screw-HH
12	55-9512	1	Cover-Bottom
13	55-9430	1	Bracket-Housing
14	3296-2	3	Nut-Lock
15	38-8620	1	Flange-Bearing
16	52-7280	2	Washer-Thrust
17	56-2610	1	Bracket-Housing, Lower
18	32149-2	3	Nut-Keps
19	3229-11	3	Screw-CARR
20	3256-1	2	Washer-Flat
21	32128-10	2	Nut-Lock, HHF
22	55-8760	1	Scraper
23	105-1967-03	1	Housing-Lower
24	52-9110	1	Flange-Bearing

Ref	Part No.	Qty.	Description
25	105-1952-03	1	Sideplate-Right
26	32105-15	5	Screw

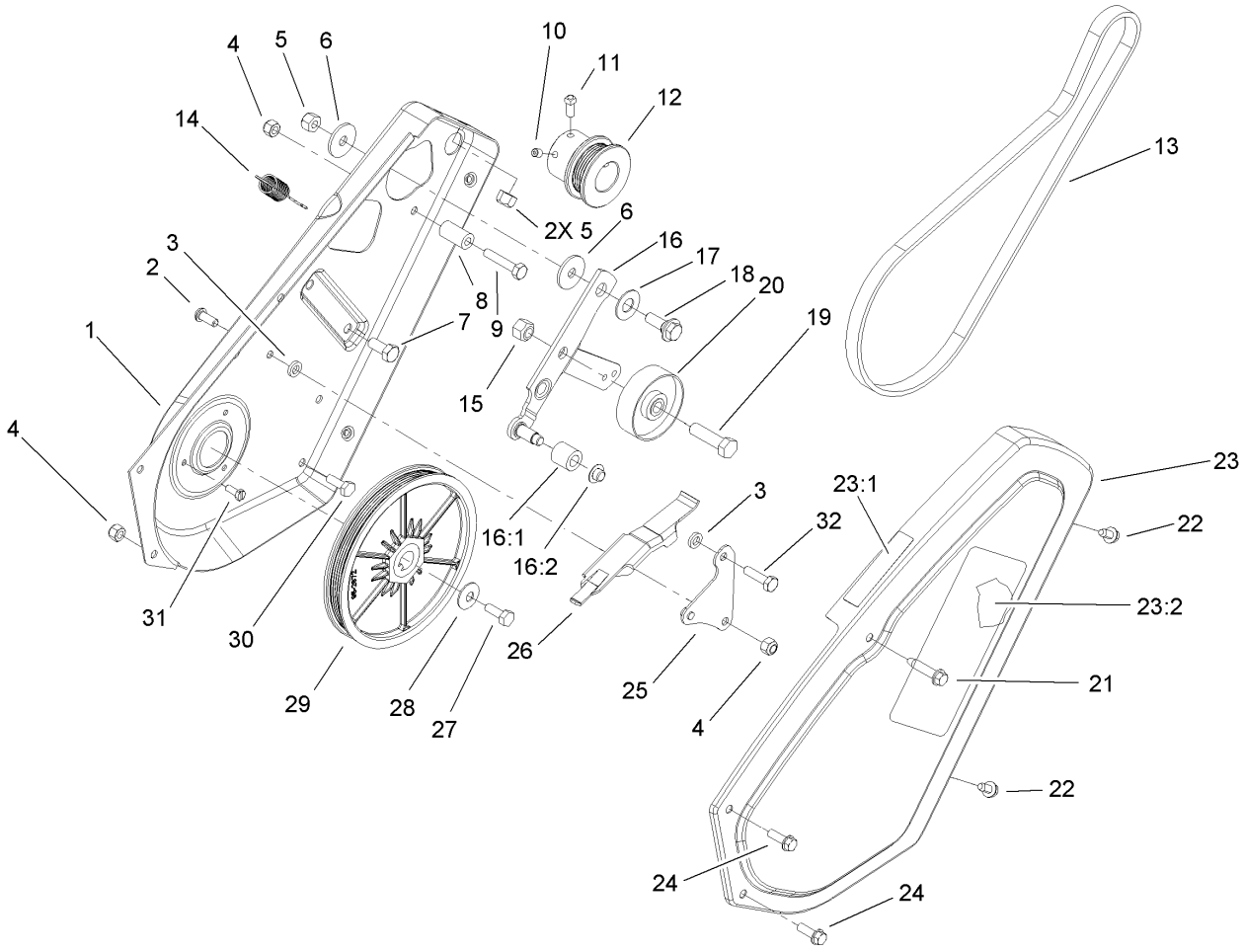

Impeller Drive Assembly

Ref	Part No.	Qty.	Description
1	55-8851-03	1	Plate-Side, LH
2	3274-31	1	Screw-HSBH
3	55-9620	2	Spacer-Plate, Pivot
4	3296-42	3	Nut-Lock, NI
5	3296-29	3	Nut-Lock, NI
6	5-4460	2	Washer-Pivot
7	322-3	2	Screw-HH
8	55-9530	1	Sleeve-Guide, Belt
9	321-13	1	Screw-HH
10	3245-32	1	Screw-HSH
11	3241-7	1	Screw-SQH
12	95-2673	1	Pulley-Engine
13	95-6151	1	Belt-Drive
14	55-9280	1	Spring-Extension
15	32152-2	1	Nut-Lock, Cone
16	105-3542	1	Idler Arm ASM
16:1	55-9520	1	Roller-Brake
16:2	32112-11	1	Nut-Push
17	25-5641	1	Washer
18	27-0410	1	Screw-Shoulder
19	323-29	1	Screw-HH
20	55-9290	1	Pulley-Idler
21	32144-110	1	Screw-HWH
22	12-3270	2	Screw

Ref	Part No.	Qty.	Description
23	105-1997	1	Cover-Drive
23:1	104-2767	1	Decal-Warning
23:2	60-9480	1	Decal
24	32105-15	2	Screw
25	55-9570	1	Pivot Plate ASM
26	55-9550	1	Brake-Arm
27	321-30	1	Screw-HH
28	3290-456	1	Washer-Belleville
29	95-2672	1	Pulley Rotor ASM
30	321-4	2	Screw-HH
31	32105-8	3	Screw-SHH
32	321-6	1	Screw-HH

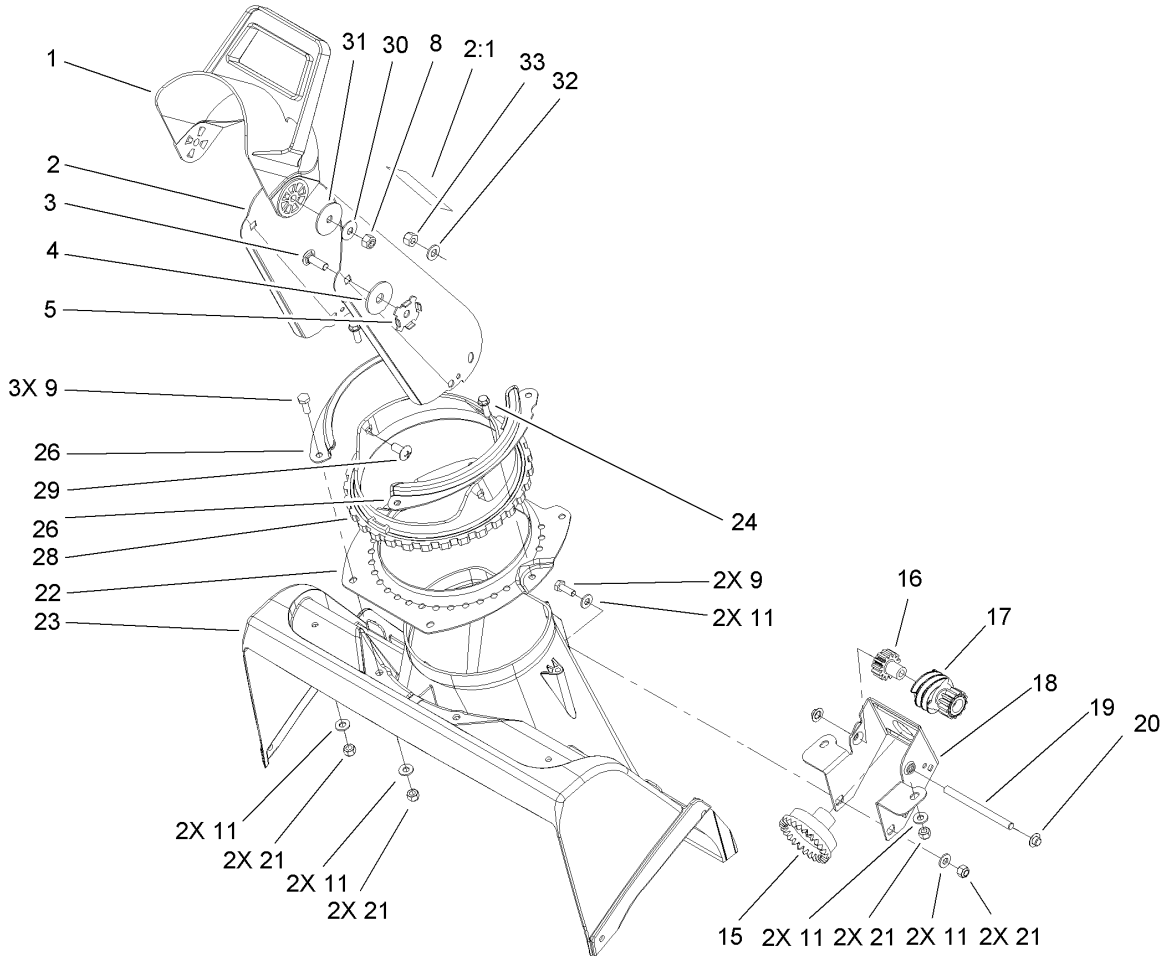

Chute Assembly

Ref	Part No.	Qty.	Description
1	56-2680	1	Chute-Deflector
2	104-4115	1	Chute ASM
2:1	104-4135	1	Decal-Danger
3	3230-22	2	Screw-CARR
4	20-4320	2	Washer-Rubber
5	55-8950	2	Plate-Friction
8	3296-29	2	Nut-Lock, NI
9	321-4	5	Screw-HH
11	3256-22	10	Washer-Flat
15	55-8740	1	Gear-Face
16	55-8750	1	Gear-Spur, Spacer
17	105-3512	1	Gear-Spur/Worm
18	105-3513	1	Bracket-Gear, Chute
19	55-9150	1	Shaft-Gear, Worm
20	32112-11	2	Nut-Push
21	3296-42	8	Nut-Lock, NI
22	55-8921-03	1	Ring-Support, Chute
23	105-1950	1	Housing-Rotor, Upper
24	46-8091	2	Screw-HWH
26	55-8910-03	2	Ring-Retainer, Chute
28	55-8720	1	Ring-Gear, Chute
29	100-5486	3	Screw-Truss HD, Phillips
30	3290-456	2	Washer-Belleville
31	3256-68	2	Washer-Flat

Ref	Part No.	Qty.	Description
32	3256-70	3	Washer-Flat
33	3296-47	3	Nut-Lock, NI

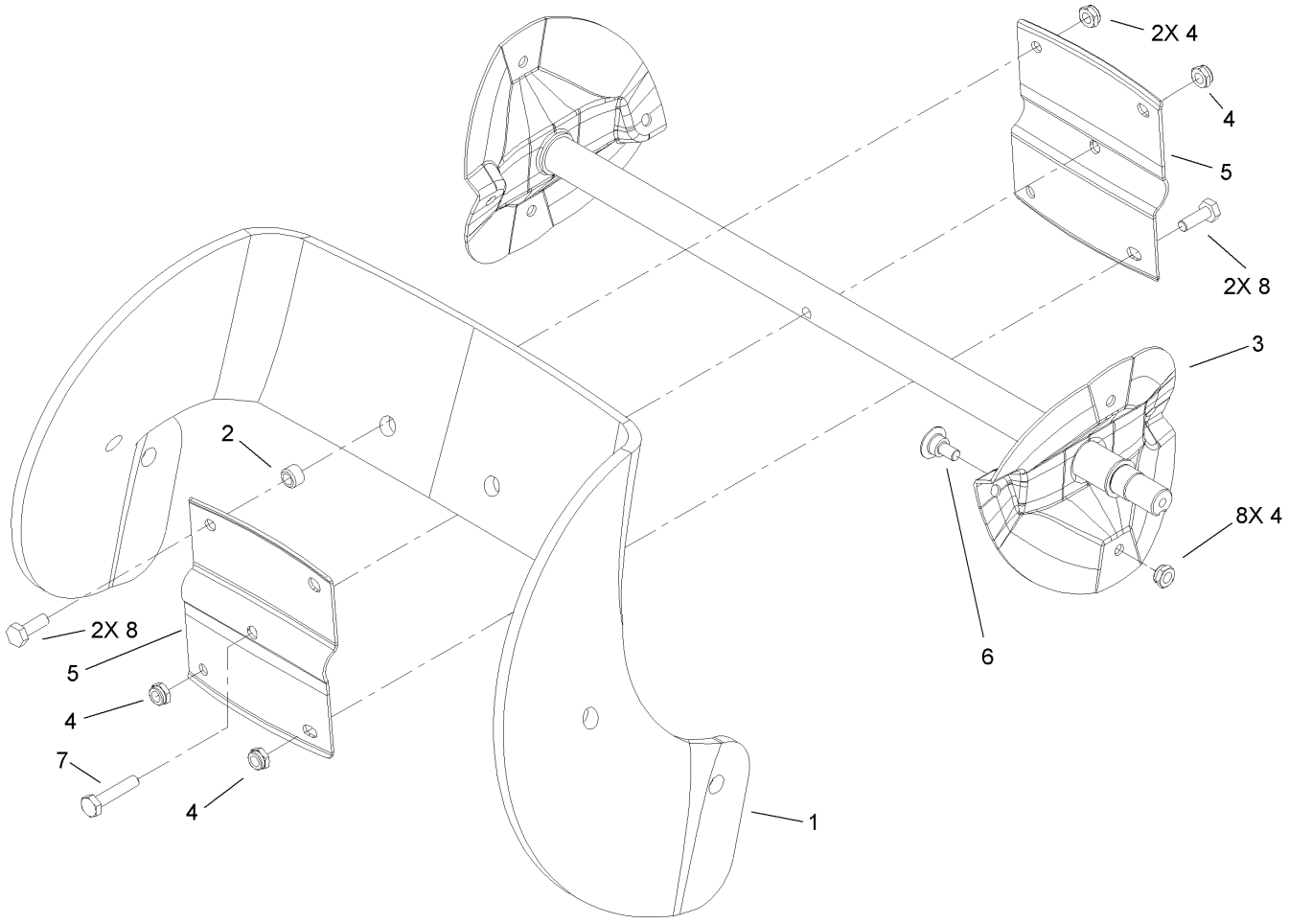

Rotor Assembly

Ref	Part No.	Qty.	Description
1	99-9313	2	Blade-Rotor
2	55-9370	4	Spacer-Blade, Rotor
3	100-5478-03	1	Rotor ASM
4	3296-56	13	Nut-Lock, NI
5	66-6600-03	2	Half-Rotor
6	84-1971	8	Screw
7	321-8	1	Screw-HH
8	321-4	4	Screw-HH

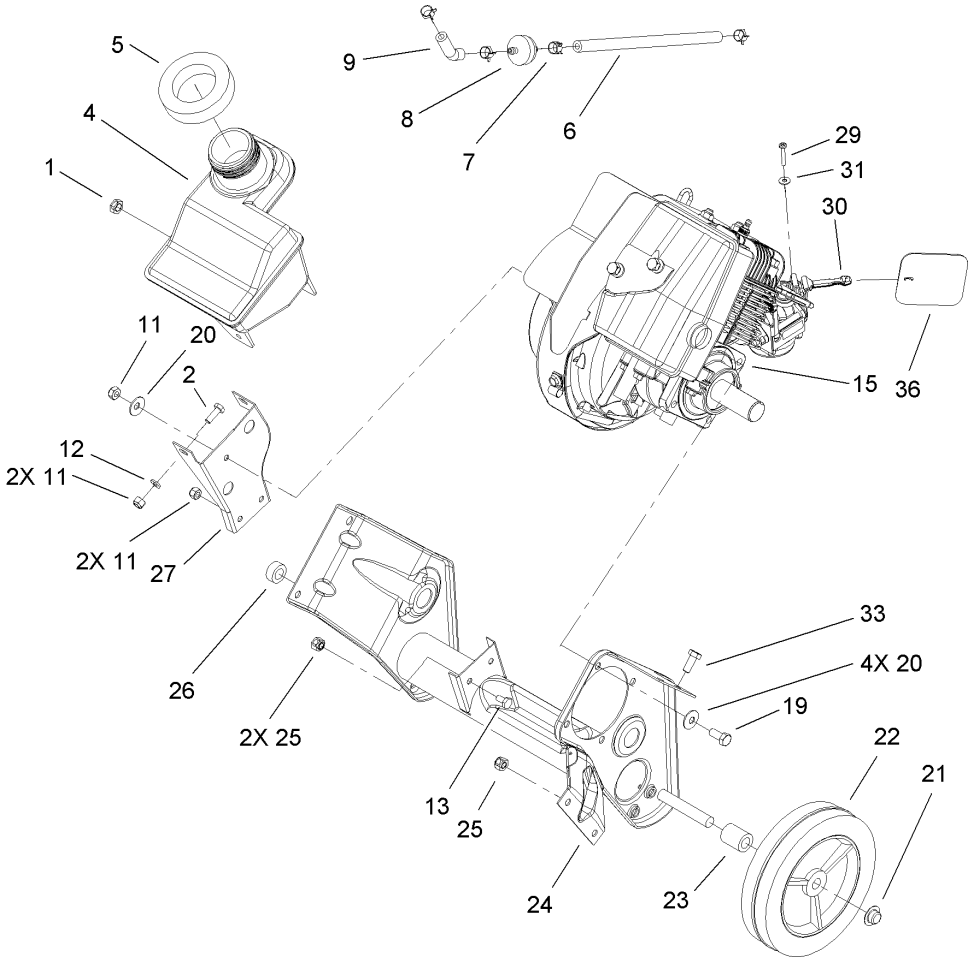

Engine, Gas Tank and Frame Assembly

Ref	Part No.	Qty.	Description
1	32152-8	1	Nut-Lock, Cone
2	321-4	2	Screw-HH
4	105-8952	1	Tank-Gas
5	55-9310	1	Seal-Foam
6	110-4894	1	Hose-Fuel
7	2412-98	4	Clamp
8	56-6360	1	Filter-Fuel
9	109-0304	1	Hose-Fuel
11	3296-42	5	Nut-Lock, NI
12	3256-22	2	Washer-Flat
13	321-2	2	Screw-HH
❶❷15		1	Engine-Briggs And Stratton, 084232-0121-E8
19	322-3	4	Screw-HH
20	3290-456	5	Washer-Belleville
21	32112-14	2	Nut-Push
22	66-6510	2	Wheel
23	66-6501	1	Spacer-Wheel
24	105-1965-03	1	Frame
25	3296-29	3	Nut-Lock, NI
26	66-6500	1	Spacer-Wheel
27	105-1968-03	1	Bracket-Support, Recoil
29	32144-97	1	Screw-PPH, Plastite
30	104-0878	1	Lever-Choke

Ref	Part No.	Qty.	Description
31	3256-14	1	Washer-Flat
33	322-43	2	Screw-HH
36	110-3444	1	Shield-Choke Hole

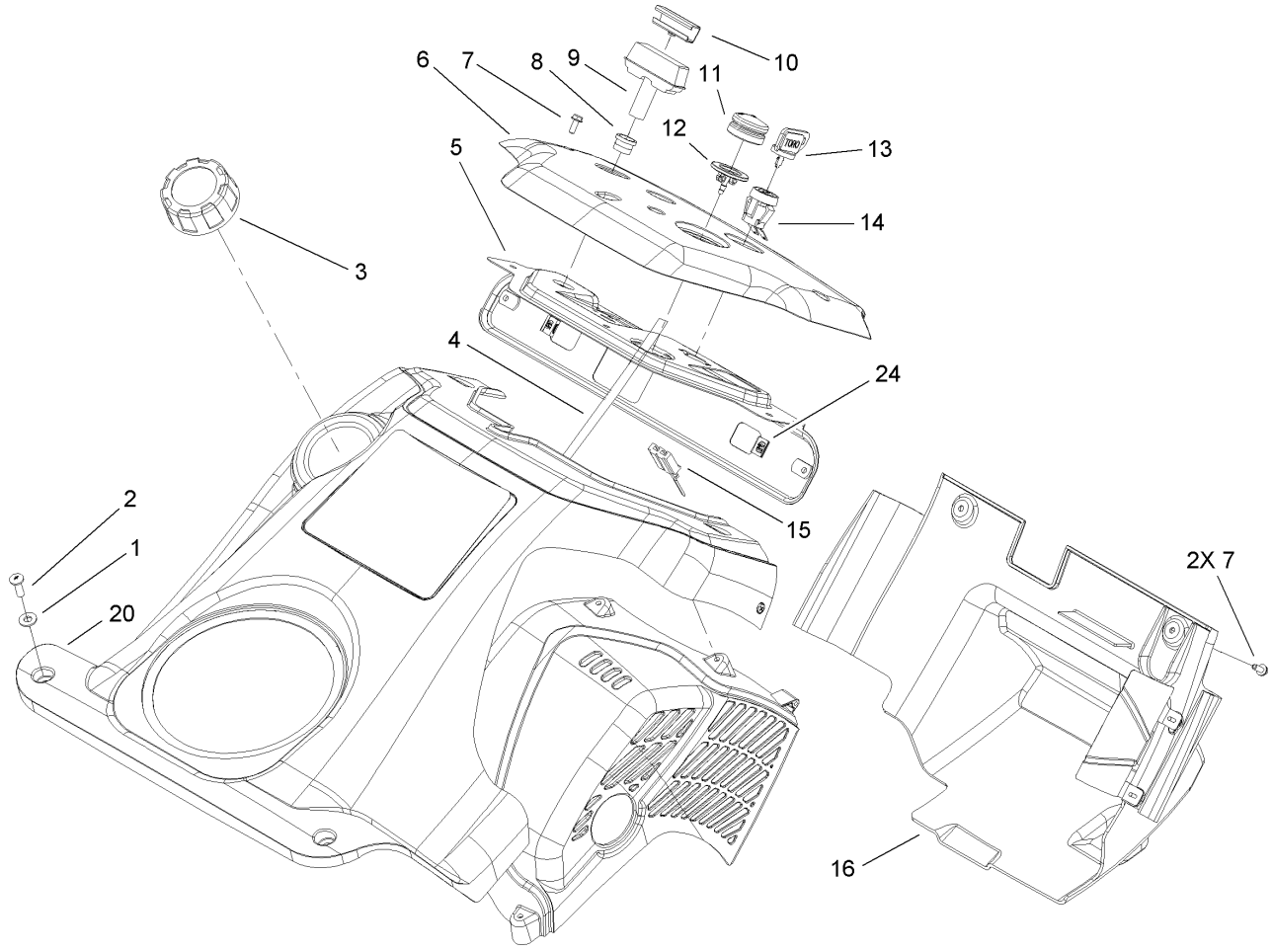

Shroud and Control Panel Assembly

Ref	Part No.	Qty.	Description
1	3256-22	2	Washer-Flat
2	3250-32	2	Screw-PPH
3	104-4133	1	Gas Cap ASM
4	98-1372	1	Hose-Primer
5	105-1999-03	1	Panel-Support, Control
6	105-1955	1	Panel-Control
7	32144-112	5	Screw-HWH
8	55-9410	1	Guide-Rope, Starter
9	612825	1	Handle-Start
10	612824	1	Clip-Starter
11	66-7460	1	Bulb-Primer
12	44-2750	1	Body-Primer
13	63-8360	1	Key-Ignition
14	40-5940	1	Switch
15	218-532	1	Connector-Body
16	108-7335	1	Lower Shroud/Baffle ASM
20	110-2188	1	Upper Shroud ASM
24	100-9889	2	Nut-Speed

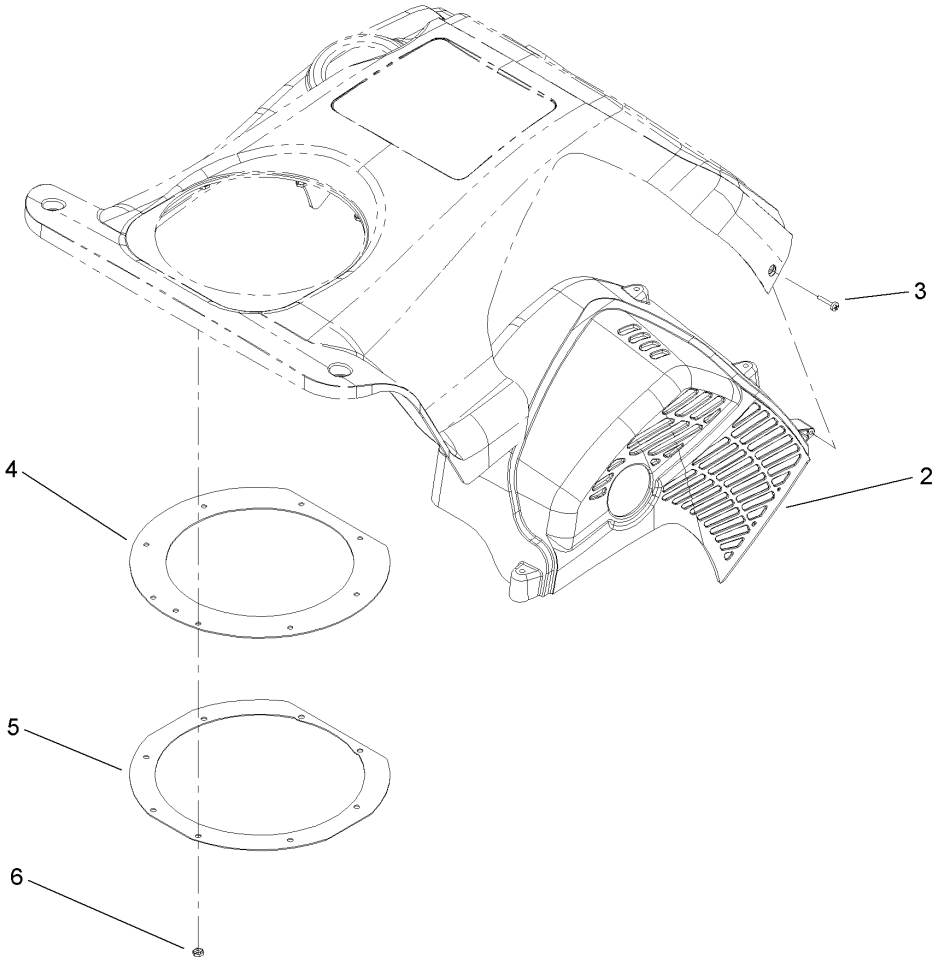

Upper Shroud Assembly No. 110-2188

Ref	Part No.	Qty.	Description
2	108-7333	1	Shield-Heat
3	94-4496	5	Screw-PPH
4	105-3543	1	Seal-Chute
5	55-9540-03	1	Retainer-Seal, Chute
6	3290-474	8	Palnut

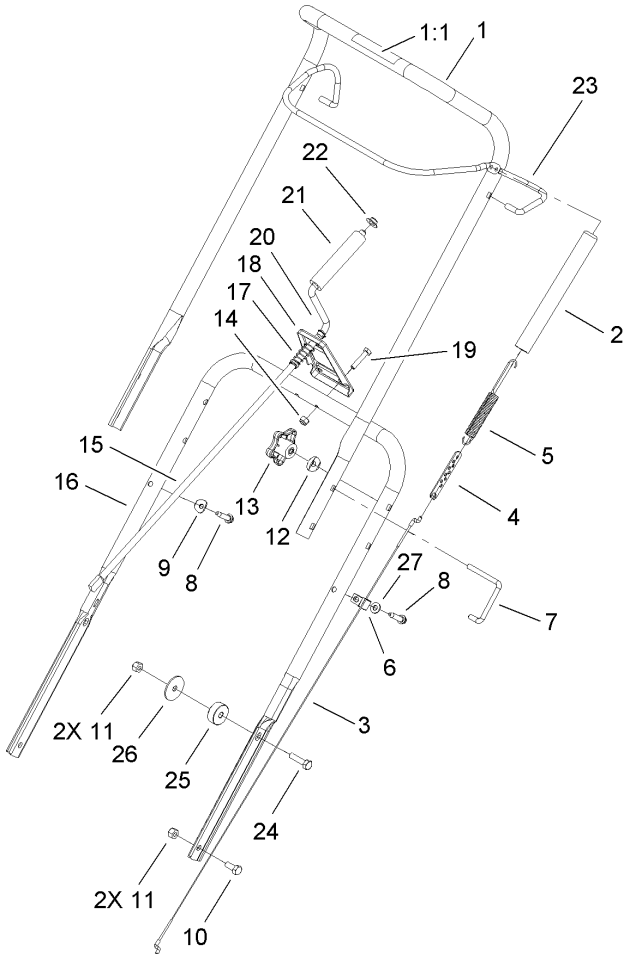

Handle Assembly

Ref	Part No.	Qty.	Description
1	95-2669	1	Upper Handle ASM
1:1	104-2775	1	Decal-Drive, Rotor
2	71-5530	1	Cover-Spring
3	110-2182	1	Cable-Clutch
4	71-5330	1	Adjuster-Cable, Clutch
5	110-2181	1	Spring-Extension
6	2412-91	1	Clamp
7	98-2266	2	Lock-Handle
8	32144-110	2	Screw-HWH
9	3-7501	1	Washer
10	322-3	2	Screw-HH
11	3296-29	4	Nut-Lock, NI
12	107-3844	2	Washer
13	106-4161	2	Knob-Handle
14	3296-42	2	Nut-Lock, NI
15	55-9140	1	Rod-Crank, Chute
16	55-9121-03	1	Handle-Lower
17	104-8664	1	Spring-Compression
18	55-9090-03	1	Support-Crank, Chute
19	321-8	2	Screw-HH
20	256-249	1	Bushing
21	40-8230	1	Grip-Control, Chute
22	3290-320	1	Retainer-Push On
23	100-5473-03	1	Bail-Control

Ref	Part No.	Qty.	Description
24	322-6	2	Screw-HH
25	105-1961	2	Spacer
26	3256-68	2	Washer-Flat
27	3256-22	1	Washer-Flat

1036 EMISSIONS LABEL

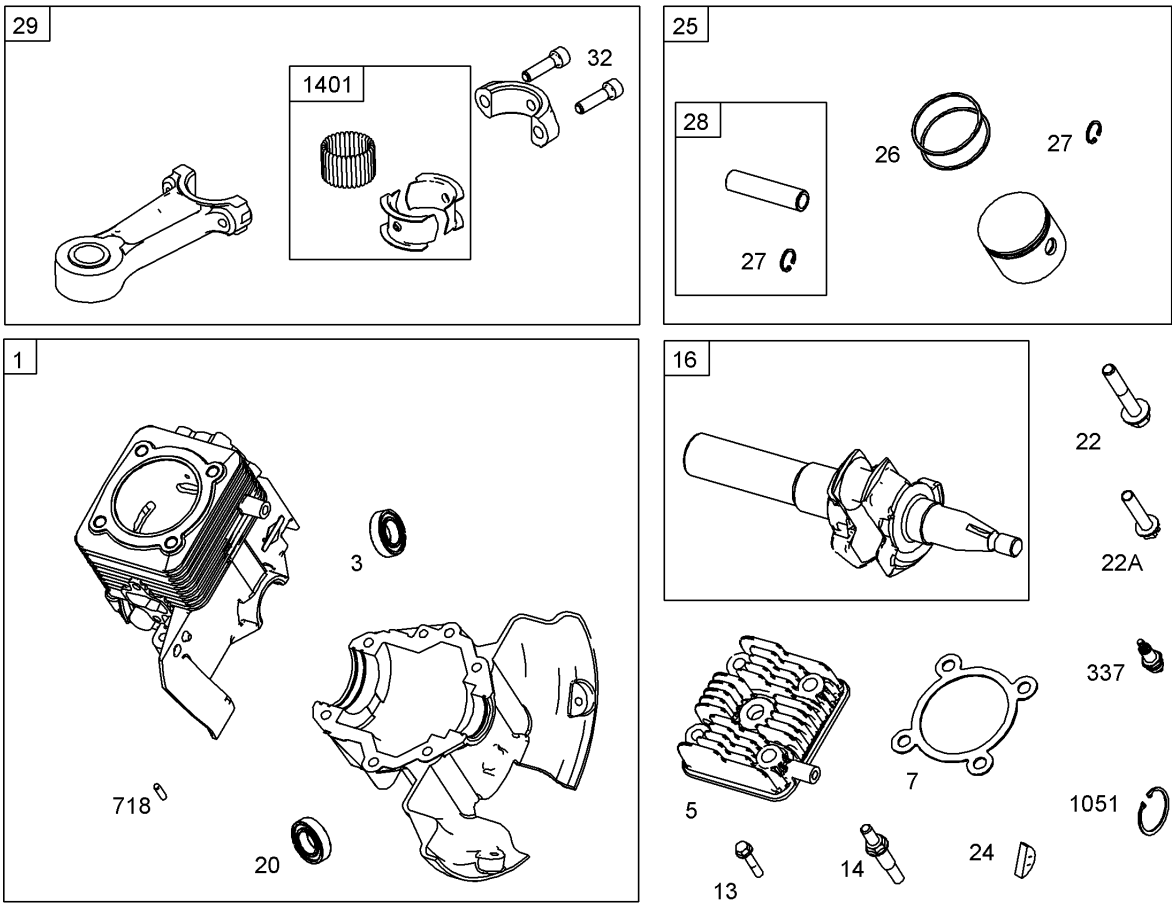

Cylinder, Piston and Connecting Rod Assemblies
Briggs and Stratton 084232-0121-E8

Ref	Part No.	Qty.	Description
❷1	801260	1	Cylinder ASM (Non Boost, Rewind Start)
❷3	801262	1	Seal-Oil (Magneto Side)
❷5	801283	1	Head-Cylinder
❷7	801263	1	Gasket-Head, Cylinder
❷13	801264	1	Screw (Cylinder Head)
❷14	801265	1	Stud (Cylinder Head)
❷16	801220	1	Crankshaft
❷20	801261	1	Seal-Oil (PTO Side)
❷22	801266	1	Screw (Crankcase Cover And Sump)
❷22A	801271	1	Screw (Crankcase Cover And Sump)
❷24	801234	1	Key-Flywheel
❷25	801279	1	Piston ASM
❷26	801280	1	Ring Set
❷27	801275	1	Lock-Pin, Piston
❷28	801276	1	Pin-Piston
❷29	801277	1	Rod-Connecting
❷32	801278	1	Screw (Connecting Rod)
❷337	801254	1	Plug-Spark
❷718	690959	1	Pin-Locating
❷1051	801274	1	Ring-Retaining
❷1036	801294	1	Label-Emissions
❷1401	801290	1	Roller-Strip

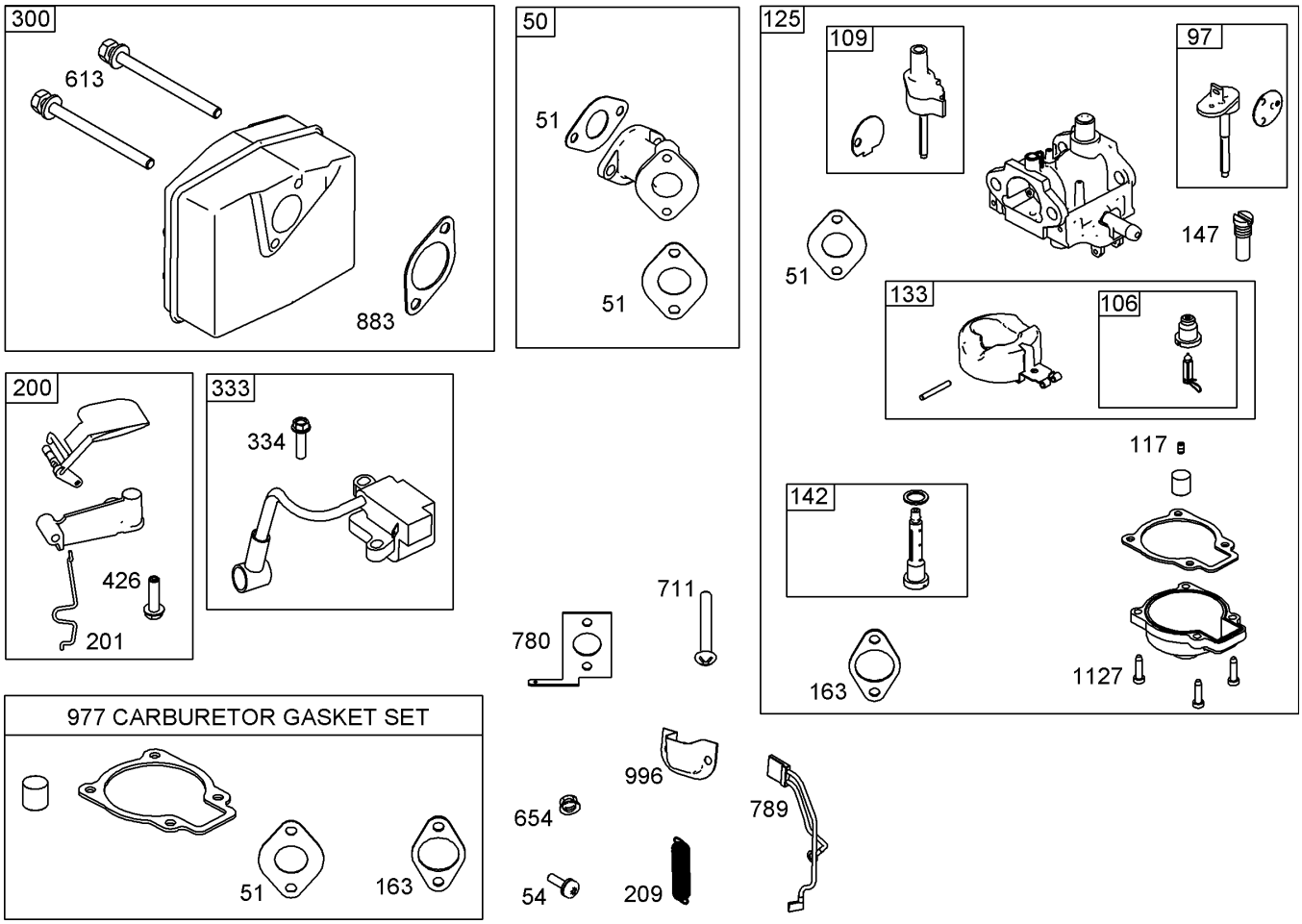

Muffler, Carburetor and Intake Manifold Assembly
Briggs and Stratton 084232-0121-E8

Ref	Part No.	Qty.	Description
❷50	801232	1	Manifold-Intake
❷❸51	801224	1	Gasket-Intake
❷54	801230	1	Screw (Intake Manifold)
❷97	801306	1	Shaft-Throttle
❷106	801317	1	Seat-Inlet
❷109	801307	1	Shaft-Choke
❷117	801310	1	Jet-Main (Standard)
❷125	801233	1	Carburetor
❷133	801316	1	Float-Carburetor
❷142	801313	1	Nozzle-Carburetor
❷147	801308	1	Jet-Pilot
❷❸163	801227	1	Gasket-Cleaner, Air
❷200	801289	1	Blade-Governor
❷201	801225	1	Link-Vane, Air
❷209	801223	1	Spring-Governor
❷300	801250	1	Muffler
❷333	801268	1	Armature-Magneto
❷334	801267	1	Screw (Magneto Armature)
❷426	801231	1	Screw (Governor Blade)
❷613	801251	1	Screw (Muffler)
❷654	801324	1	Nut (Intake Manifold) (Used Before Code Date 05042800)
❷711	801229	1	Screw (Carburetor Shield)
❷780	801228	1	Anchor-Spring

Ref	Part No.	Qty.	Description
❷789	801253	1	Wire ASM
❷883	801252	1	Gasket-Exhaust
❷977	801312	1	Gasket Set-Carburetor
❷996	801226	1	Shield-Carburetor
❷1127	801318	1	Screw (Float Bowl)

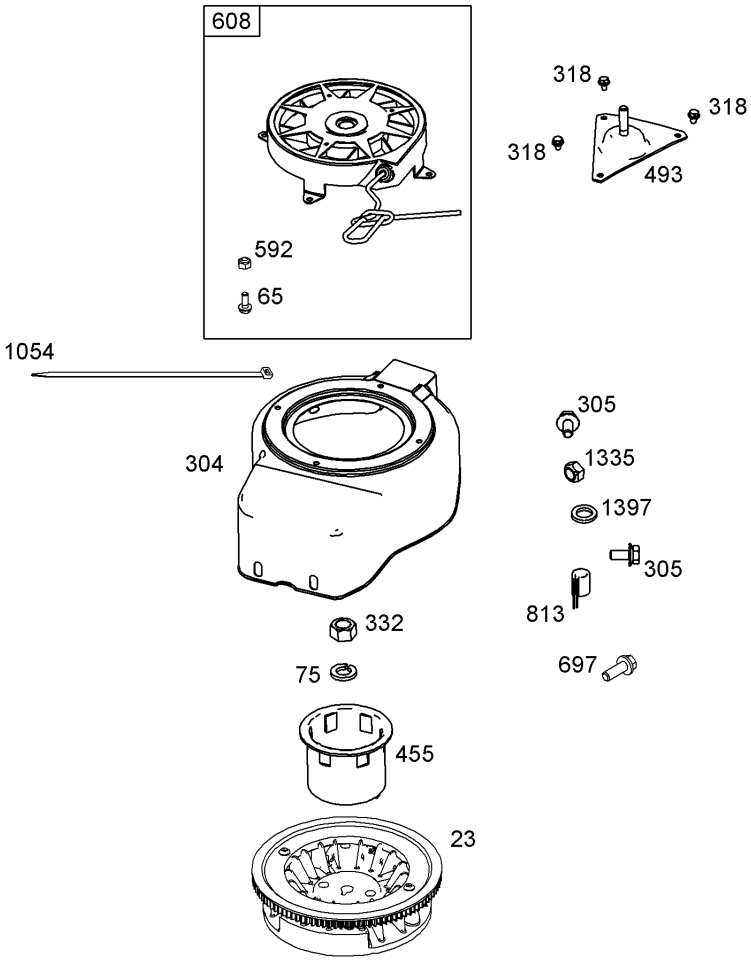

Flywheel, Blower Housing and Starter Assemblies
Briggs and Stratton 084232-0121-E8

Ref	Part No.	Qty.	Description
❷23	801246	1	Flywheel
❷65	801243	1	Screw (Rewind Starter)
❷75	801237	1	Washer (Flywheel)
❷304	801257	1	Housing-Blower
❷305	801239	1	Screw (Blower Housing)
❷318	801241	1	Screw (Mounting Bracket)
❷332	801238	1	Nut (Flywheel)
❷455	801235	1	Cup-Flywheel
❷493	801240	1	Bracket-Mounting
❷592	801244	1	Nut (Rewind Starter)
❷608	801242	1	Starter-Rewind
❷697	801248	1	Screw (Starter Motor)
❷813	801249	1	Clamp
❷1054	861206	1	Tie-Cable
❷1335	801269	1	Nut (Blower Housing)
❷1397	801270	1	Washer (Blower Housing)

Attachments and Accessories

For 38517 - CCR 3650 GTS Snowthrower

Product Name	Model/Part
Lower Shroud Replacement Kit	108-7338
Snow Cab	88-0600

NOTES


TORO®