Form Number 3355-471 Rev A

CCR™ 2450 GTS®
Snowthrower

Model No. 38535 - 270000001 and up.

Parts Catalog

Ordering Replacement Parts

To order replacement parts, please supply the part number, the quantity, and the description of each part desired.

Understanding Reference Numbers

Each Identified part in an illustration has a reference number. The reference number for a part also appears in the parts list, along with other information about the part.

This catalog uses two special reference number formats, one to indicate parts in a service assembly and another to indicate the quantity of a given part in an illustration.

Service Assembly Reference Numbers

Parts in service assemblies have reference numbers in the form a:b. The a represents the reference number of the entire service assembly and the b represents a sequential number unique to each part within the service assembly.

For example, a wheel assembly might be identified by reference number 6, the tire by 6:1, the valve by 6:2, and the wheel by 6:3. When you order the assembly identified by reference number 6, you receive all parts identified by reference numbers 6:1, 6:2, and 6:3. However, you may also order any part individually. Reference numbers of this type appear in illustrations and in part lists.

Reference Numbers Indicating Quantity

In an illustration, if a reference number indicates more than one part, the reference number has the form nX y. The n represents the quantity of the part, the X is the multiplication symbol, and the y represents the reference number.

For example, in an illustration, the reference number 2X 37 means that two of the parts identified by reference number 37 are indicated.

© The Toro Company - 2006
All Rights Reserved

Register your product at www.Toro.com

Contents

Description	Page
Rotor Housing and Scraper Assembly	3
Impeller Drive Assembly	4
Chute and Rotor Housing Assembly	5
Rotor Assembly	6
Engine, Gas Tank and Frame Assembly	7
Shroud and Control Panel Assembly	8
Upper Shroud Assembly No. 110-2187	9
Handle Assembly	10
Cylinder, Piston, and Connecting Rod Assemblies Briggs and Stratton 084132-0120-E1	11
Muffler, Carburetor, and Intake Manifold Assemblies Briggs and Stratton 084132-0120-E1	12
Flywheel, Blower Housing, and Rewind Starter Assemblies Briggs and Stratton 084132-0120-E1	13
Attachments and Accessories List	14

Part Description Abbreviations

Part descriptions in this catalog may include the following abbreviations.

AR. . . . . as required
ASM. . . . . assembly
BBC. . . . . blade brake clutch
CARR. . . . . carriage
DEG. . . . . degrees
EXT. . . . . external
FH. . . . . flat head
GA. . . . . gauge
HD. . . . . heavy-duty
HF. . . . . hex flange
HH. . . . . hex head
HHF. . . . . hex head flange
HHFTF. . . . . hex head flange thread forming
HJ. . . . . hex jam
HLH. . . . . hex lag head
HOC. . . . . height-of-cut
HSBH. . . . . hex socket button head
HSFH. . . . . hex socket flat head
HSH. . . . . hex socket head
HWH. . . . . hex washer head
HWHTF. . . . . hex washer head thread forming
HYD. . . . . hydraulic
LH. . . . . left hand
NI. . . . . nylon insert
NPTF. . . . . national pipe thread fine
PFH. . . . . phillips flat head
PPH. . . . . phillips pan head
PPHTF. . . . . phillips pan head thread forming
PRH. . . . . phillips round head
PTH. . . . . phillips truss head
PTO. . . . . power-take-off
RH. . . . . right hand
ROPS. . . . . roll-over protection system
SFH. . . . . slotted fillister head
SHH. . . . . slotted hex head
SHWH. . . . . slotted hex washer head
SPH. . . . . slotted pan head
SQH. . . . . square head
SRH. . . . . slotted round head
STD. . . . . standard
TAP. . . . . self tapping
TTH. . . . . torx truss head

Footnotes

❶ Not serviced separately

❷ Obtain from your local Briggs & Stratton dealer

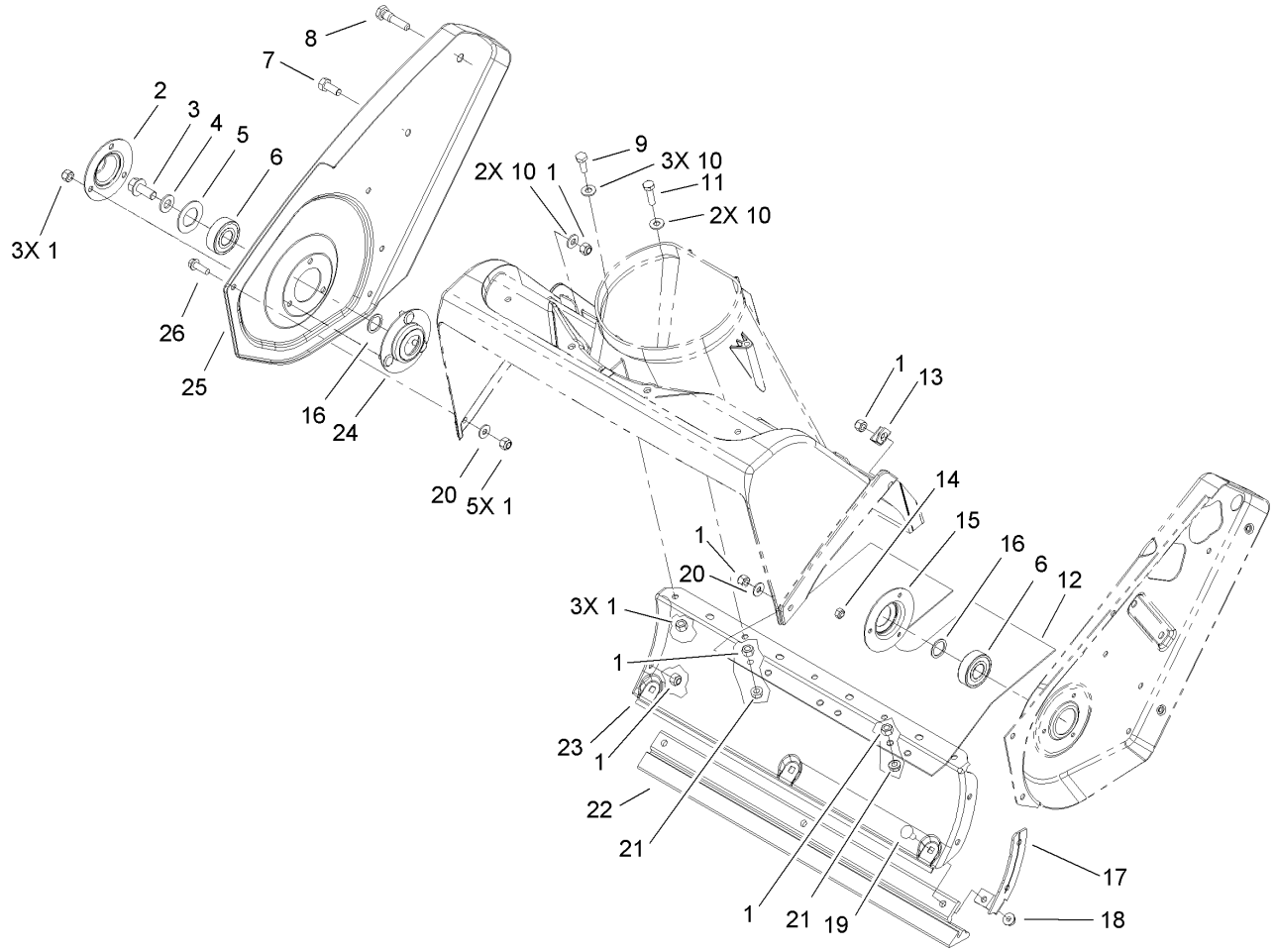

Rotor Housing and Scraper Assembly

Ref	Part No.	Qty.	Description
1	3296-42	17	Nut-Lock, NI
2	52-7290-03	1	Retainer-Bearing
3	3234-25	1	Screw-HHF
4	3256-24	1	Washer-Flat
5	52-7270	1	Washer-Rubber
6	100-1048	2	Bearing-Ball
7	322-43	1	Screw-HH
8	38-8211	1	Pin-Rotor
9	321-4	3	Screw-HH
10	3256-22	7	Washer-Flat
11	321-6	2	Screw-HH
12	55-9512	1	Cover-Bottom
13	55-9430	1	Bracket-Housing
14	3296-2	3	Nut-Lock
15	38-8620	1	Flange-Bearing
16	52-7280	2	Washer-Thrust
17	56-2610	1	Bracket-Housing, Lower
18	32149-2	3	Nut-Keps
19	3229-11	3	Screw-CARR
20	3256-1	2	Washer-Flat
21	32128-10	2	Nut-Lock, HHF
22	55-8760	1	Scraper
23	105-1967-03	1	Housing-Lower
24	52-9110	1	Flange-Bearing

Ref	Part No.	Qty.	Description
25	105-1952-03	1	Sideplate-Right
26	32105-15	5	Screw

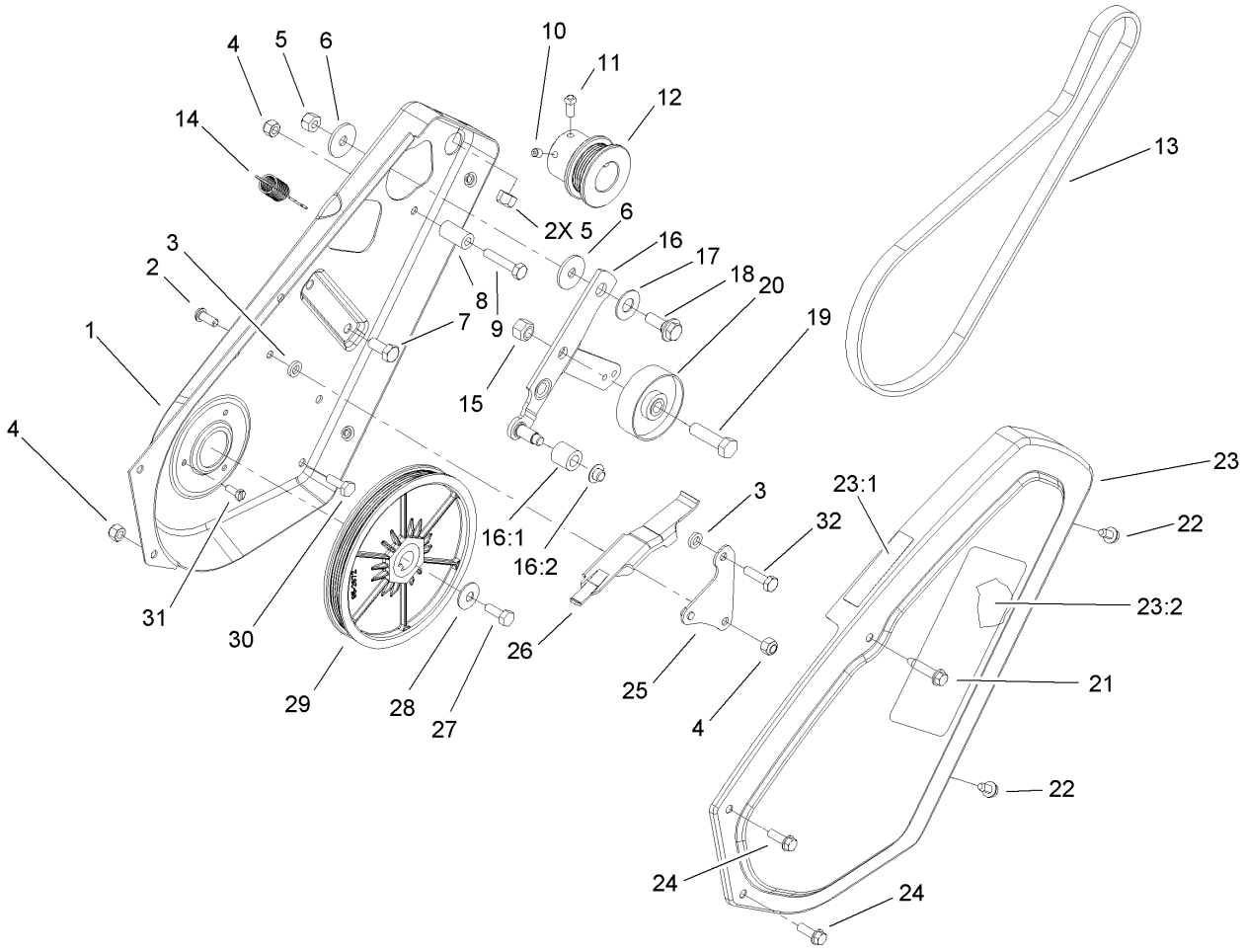

Impeller Drive Assembly

Ref	Part No.	Qty.	Description
1	55-8851-03	1	Plate-Side, LH
2	3274-31	1	Screw-HSBH
3	55-9620	2	Spacer-Plate, Pivot
4	3296-42	3	Nut-Lock, NI
5	3296-29	3	Nut-Lock, NI
6	5-4460	2	Washer-Pivot
7	322-3	2	Screw-HH
8	55-9530	1	Sleeve-Guide, Belt
9	321-13	1	Screw-HH
10	3245-32	1	Screw-HSH
11	3241-7	1	Screw-SQH
12	95-2673	1	Pulley-Engine
13	95-6151	1	Belt-Drive
14	55-9280	1	Spring-Extension
15	32152-2	1	Nut-Lock, Cone
16	105-3542	1	Idler Arm ASM
16:1	55-9520	1	Roller-Brake
16:2	32112-11	1	Nut-Push
17	25-5641	1	Washer
18	27-0410	1	Screw-Shoulder
19	323-29	1	Screw-HH
20	55-9290	1	Pulley-Idler
21	32144-110	1	Screw-HWH
22	12-3270	2	Screw

Ref	Part No.	Qty.	Description
23	105-1998	1	Drive Cover ASM
23:1	94-2561	1	Decal-Hot
23:2	60-9480	1	Decal
24	32105-15	2	Screw
25	55-9570	1	Pivot Plate ASM
26	55-9550	1	Brake-Arm
27	321-30	1	Screw-HH
28	3290-456	1	Washer-Belleville
29	95-2672	1	Pulley Rotor ASM
30	321-4	2	Screw-HH
31	32105-8	3	Screw-SHH
32	321-6	1	Screw-HH

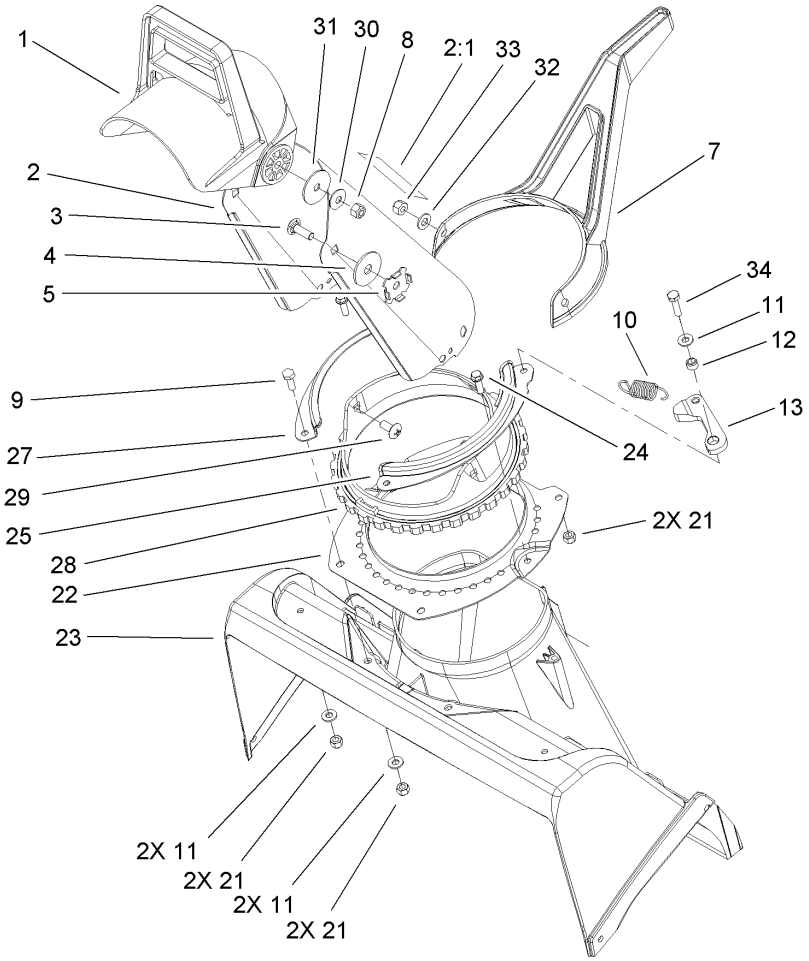

Chute and Rotor Housing Assembly

Ref	Part No.	Qty.	Description
1	56-2680	1	Chute-Deflector
2	94-2791	1	Chute ASM
2:1	94-2901	1	Decal-Danger
3	3230-22	2	Screw-CARR
4	20-4320	2	Washer-Rubber
5	55-8950	2	Plate-Friction
7	94-9914	1	Handle-Control, Chute
8	3296-29	2	Nut-Lock, NI
9	321-4	3	Screw-HH
10	80-4600	1	Spring-Extension
11	3256-22	5	Washer-Flat
12	55-9370	1	Spacer-Blade, Rotor
13	80-4610	1	Detent
21	3296-42	6	Nut-Lock, NI
22	55-8921-03	1	Ring-Support, Chute
23	105-1950	1	Housing-Rotor, Upper
24	46-8091	2	Screw-HWH
25	71-4980-03	1	Retainer-Chute, LH
27	71-4990-03	1	Retainer-Chute, RH
28	104-2763	1	Ring-Chute
29	100-5487	3	Screw-PTH
30	3290-456	2	Washer-Belleville
31	3256-68	2	Washer-Flat
32	3256-70	3	Washer-Flat

Ref	Part No.	Qty.	Description
33	3296-47	3	Nut-Lock, NI
34	321-6	1	Screw-HH

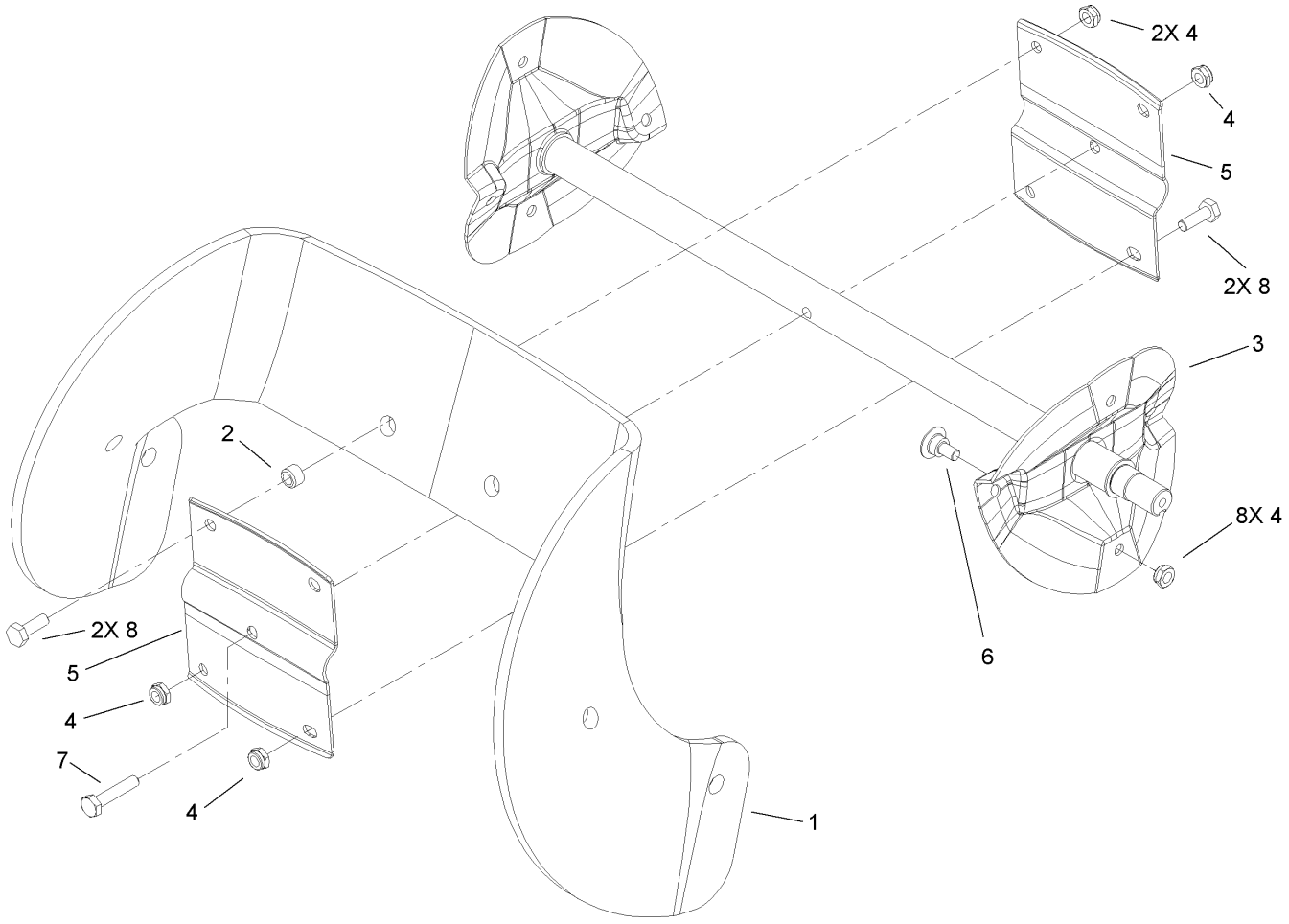

Rotor Assembly

Ref	Part No.	Qty.	Description
1	99-9313	2	Blade-Rotor
2	55-9370	4	Spacer-Blade, Rotor
3	100-5478-03	1	Rotor ASM
4	3296-56	13	Nut-Lock, NI
5	66-6600-03	2	Half-Rotor
6	84-1971	8	Screw
7	321-8	1	Screw-HH
8	321-4	4	Screw-HH

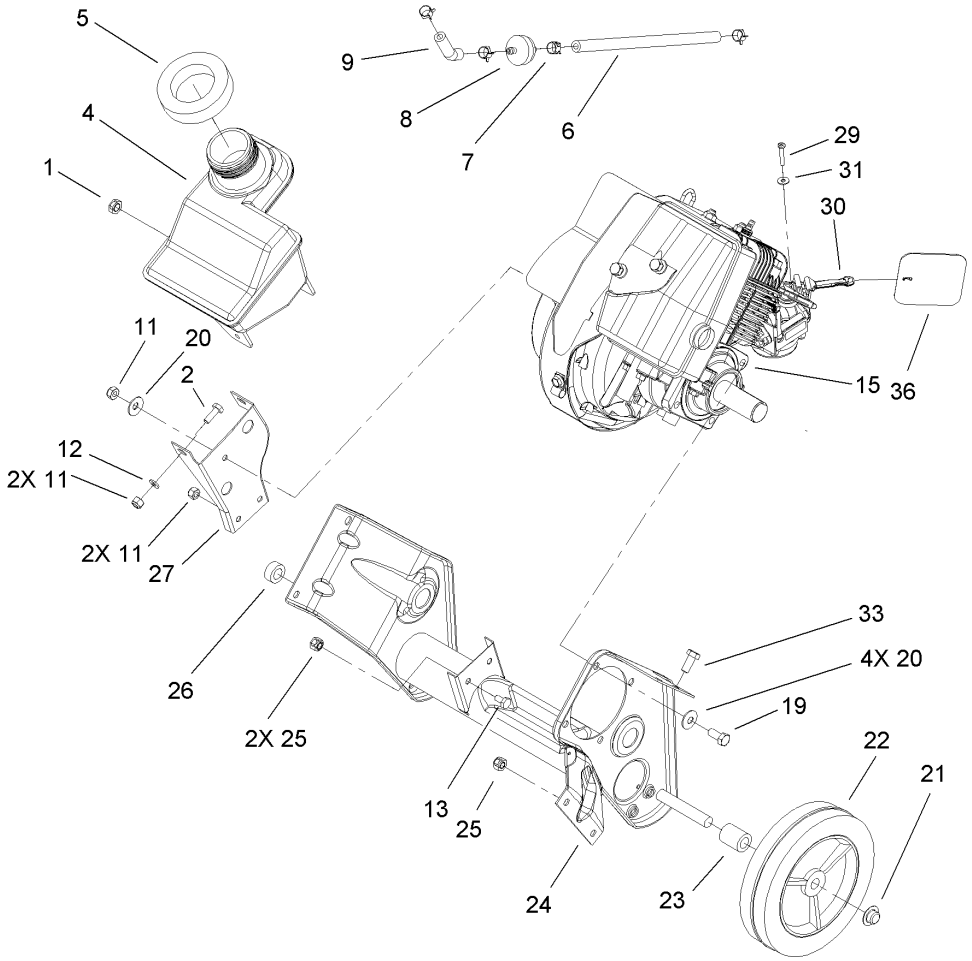

Engine, Gas Tank and Frame Assembly

Ref	Part No.	Qty.	Description
1	32152-8	1	Nut-Lock, Cone
2	321-4	2	Screw-HH
4	105-8952	1	Tank-Gas
5	55-9310	1	Seal-Foam
6	110-4894	1	Hose-Fuel
7	2412-98	4	Clamp
8	56-6360	1	Filter-Fuel
9	109-0304	1	Hose-Fuel
11	3296-42	5	Nut-Lock, NI
12	3256-22	2	Washer-Flat
13	321-2	2	Screw-HH
❶❷15		1	Engine-Briggs And Stratton, 084132-0120-E1
19	322-3	4	Screw-HH
20	3290-456	5	Washer-Belleville
21	32112-14	2	Nut-Push
22	66-6510	2	Wheel
23	66-6501	1	Spacer-Wheel
24	105-1965-03	1	Frame
25	3296-29	3	Nut-Lock, NI
26	66-6500	1	Spacer-Wheel
27	105-1968-03	1	Bracket-Support, Recoil
29	32144-97	1	Screw-PPH, Plastite
30	104-0878	1	Lever-Choke

Ref	Part No.	Qty.	Description
31	3256-14	1	Washer-Flat
33	322-43	2	Screw-HH
36	110-3444	1	Shield-Choke Hole

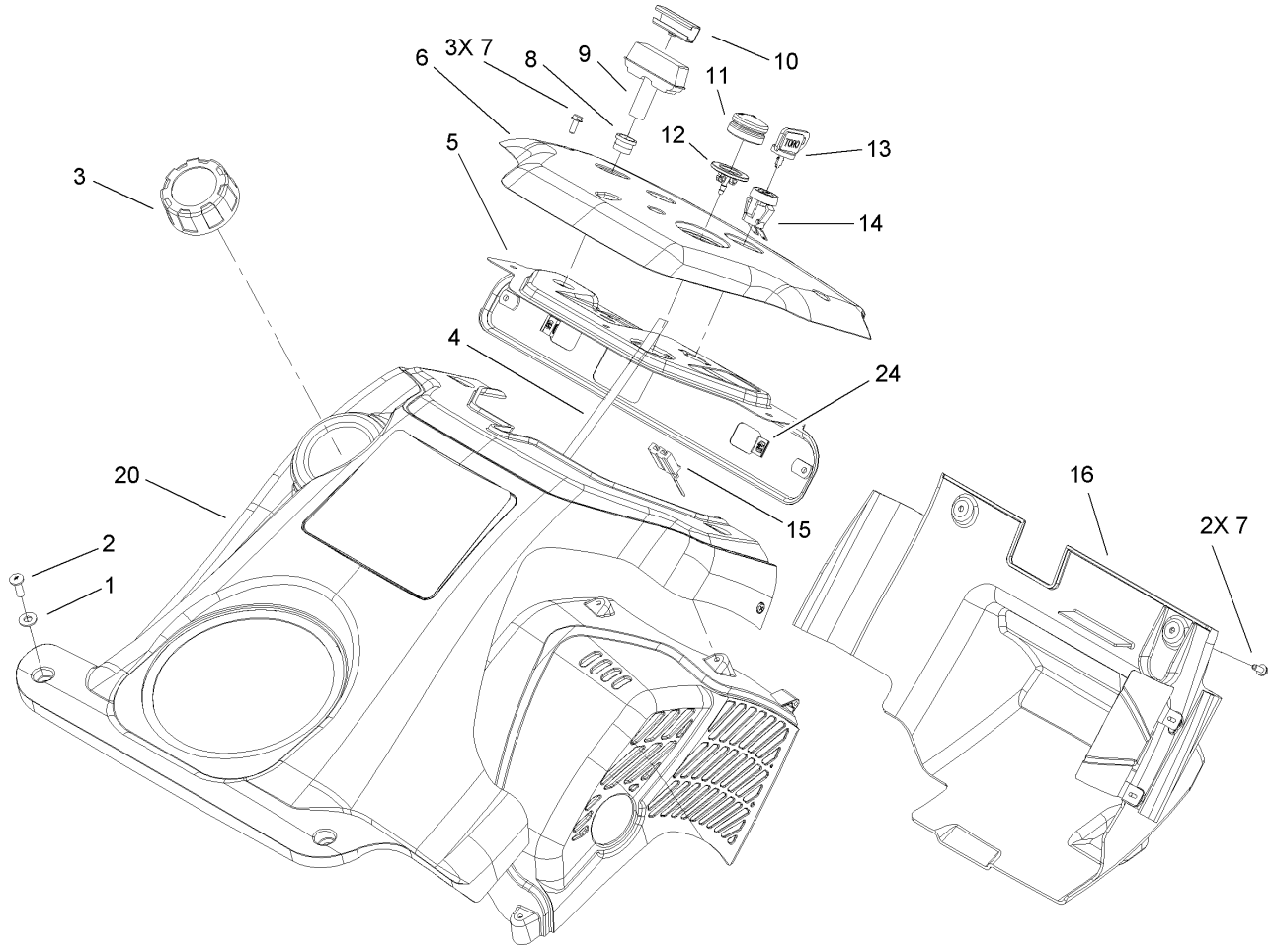

Shroud and Control Panel Assembly

Ref	Part No.	Qty.	Description
1	3256-22	2	Washer-Flat
2	3250-32	2	Screw-PPH
3	104-4133	1	Gas Cap ASM
4	98-1372	1	Hose-Primer
5	105-1999-03	1	Panel-Support, Control
6	105-3522	1	Panel-Control
7	32144-112	5	Screw-HWH
8	55-9410	1	Guide-Rope, Starter
9	612825	1	Handle-Start
10	612824	1	Clip-Starter
11	66-7460	1	Bulb-Primer
12	44-2750	1	Body-Primer
13	63-8360	1	Key-Ignition
14	40-5940	1	Switch
15	218-532	1	Connector-Body
16	108-7342	1	Lower Shroud/Baffle ASM
20	110-2187	1	Upper Shroud ASM
24	100-9889	2	Nut-Speed

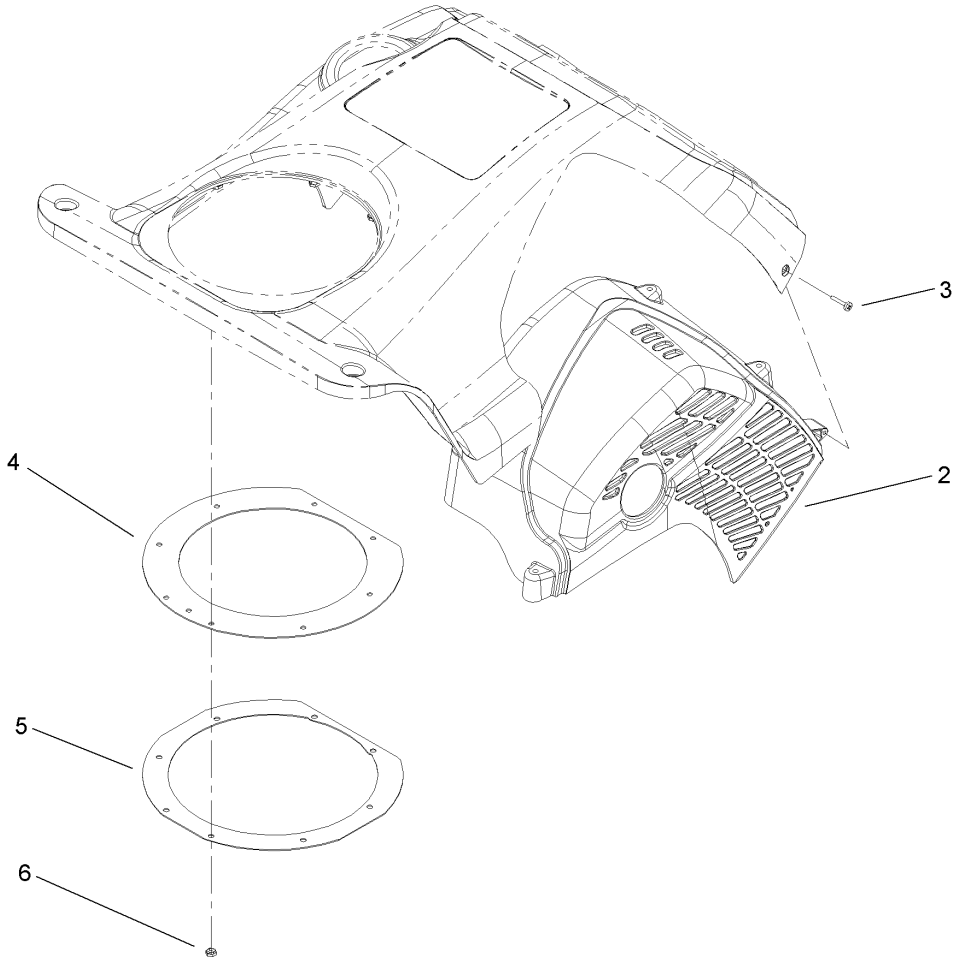

Upper Shroud Assembly No. 110-2187

Ref	Part No.	Qty.	Description
2	108-7333	1	Shield-Heat
3	94-4496	5	Screw-PPH
4	105-3543	1	Seal-Chute
5	55-9540-03	1	Retainer-Seal, Chute
6	3290-474	8	Palnut

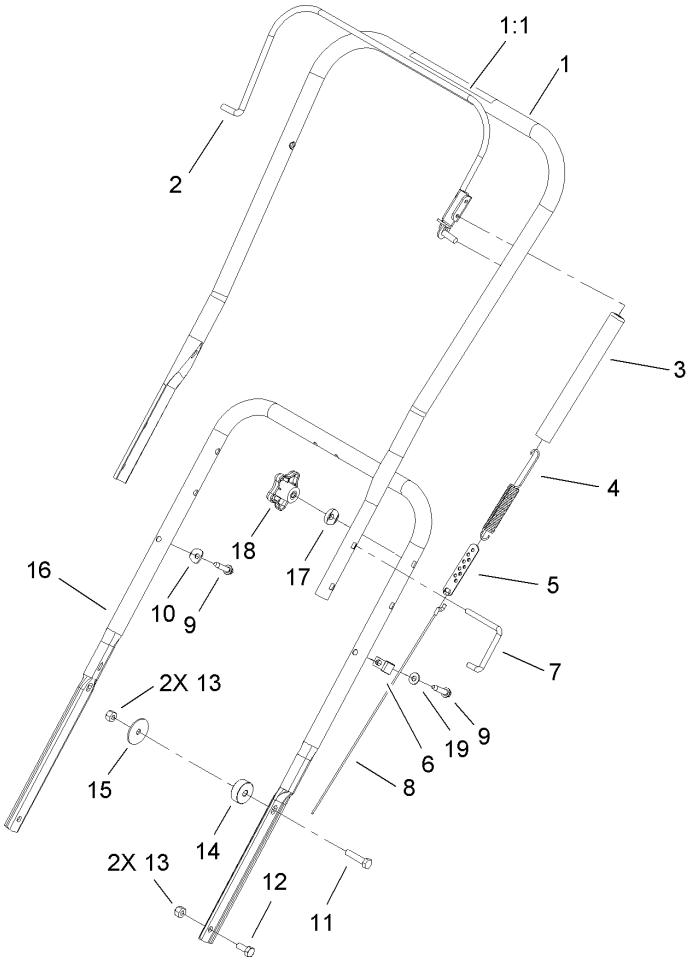

Handle Assembly

Ref	Part No.	Qty.	Description
1	95-2668	1	Upper Handle ASM
1:1	94-2577	1	Decal-Drive, Rotor
2	71-5120-03	1	Bail ASM
3	71-5530	1	Cover-Spring
4	71-5480	1	Spring-Clutch
5	71-5330	1	Adjuster-Cable, Clutch
6	2412-91	1	Clamp
7	98-2266	2	Lock-Handle
8	110-3437	1	Cable-Clutch
9	32144-110	2	Screw-HWH
10	3-7501	1	Washer
11	322-6	2	Screw-HH
12	322-3	2	Screw-HH
13	3296-29	4	Nut-Lock, NI
14	105-1961	2	Spacer
15	3256-68	2	Washer-Flat
16	55-9121-03	1	Handle-Lower
17	107-3844	2	Washer
18	106-4161	2	Knob-Handle
19	3256-22	1	Washer-Flat

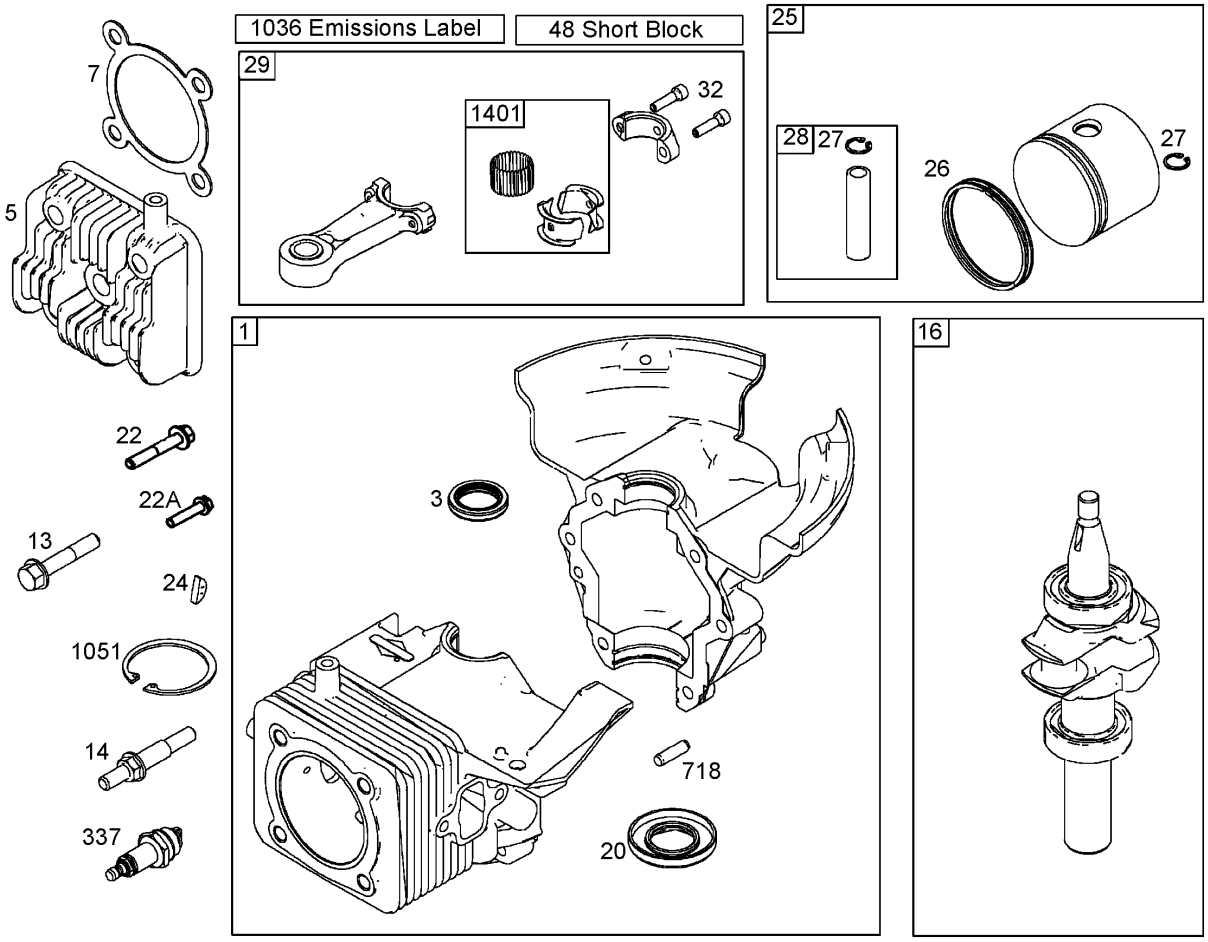

Cylinder, Piston, and Connecting Rod Assemblies
Briggs and Stratton 084132-0120-E1

Ref	Part No.	Qty.	Description
❷1	801260	1	Cylinder ASM
❷3	801262	1	Seal-Oil
❷5	801283	1	Head-Cylinder
❷7	801263	1	Gasket-Head, Cylinder
❷13	801264	1	Screw (Cylinder Head)
❷14	801265	1	Stud (Cylinder Head)
❷16	801220	1	Crankshaft
❷20	801261	1	Seal-Oil
❷22	801266	1	Screw (Crankcase Cover And Sump)
❷22A	801271	1	Screw (Crankcase Cover And Sump)
❷24	801234	1	Key-Flywheel
❷25	801279	1	Piston ASM
❷26	801280	1	Ring Set
❷27	801275	1	Lock-Pin, Piston
❷28	801276	1	Pin-Piston
❷29	801277	1	Rod-Connecting
❷32	801278	1	Screw
❷48	801284	1	Short Block
❷337	801254	1	Plug-Spark
❷718	690959	1	Pin-Locating
❷1051	801274	1	Ring-Retaining
❷1036	801294	1	Label-Emissions

Ref	Part No.	Qty.	Description
❷1401	801290	1	Roller-Strip

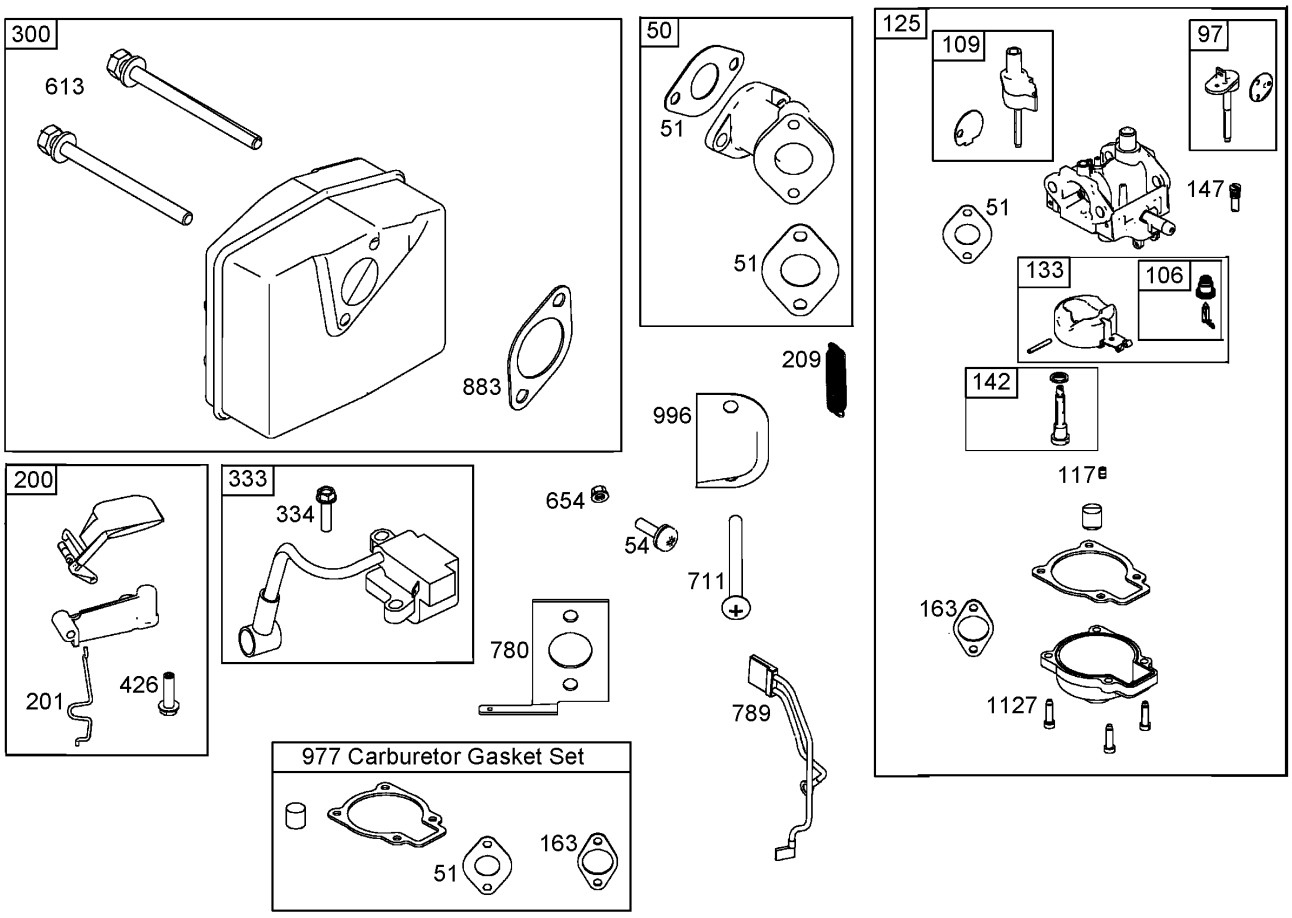

Muffler, Carburetor, and Intake Manifold Assemblies
Briggs and Stratton 084132-0120-E1

Ref	Part No.	Qty.	Description
❷50	801232	1	Manifold-Intake
❷51	801224	1	Gasket-Intake
❷54	801230	1	Screw (Intake Manifold)
❷97	801306	1	Shaft-Throttle
❷106	801317	1	Seat-Inlet
❷109	801307	1	Shaft-Choke
❷117	801310	1	Jet-Main
❷125	801233	1	Carburetor
❷133	801316	1	Float-Carburetor
❷142	801313	1	Nozzle-Carburetor
❷147	801308	1	Jet-Pilot
❷163	801227	1	Gasket-Cleaner, Air
❷200	801289	1	Blade-Governor
❷201	801225	1	Link-Vane, Air
❷209	801223	1	Spring-Governor
❷300	801250	1	Muffler
❷333	801268	1	Armature-Magneto
❷334	801267	1	Screw
❷426	801231	1	Screw
❷613	801251	1	Screw
❷654	801324	1	Nut (Intake Manifold) (Used Before Engine Code Date 05042600)
❷711	801229	1	Screw

Ref	Part No.	Qty.	Description
❷780	801228	1	Anchor-Spring
❷789	801253	1	Wire ASM
❷883	801252	1	Gasket-Exhaust
❷977	801312	1	Gasket Set-Carburetor
❷996	801226	1	Shield-Carburetor
❷1127	801318	1	Screw

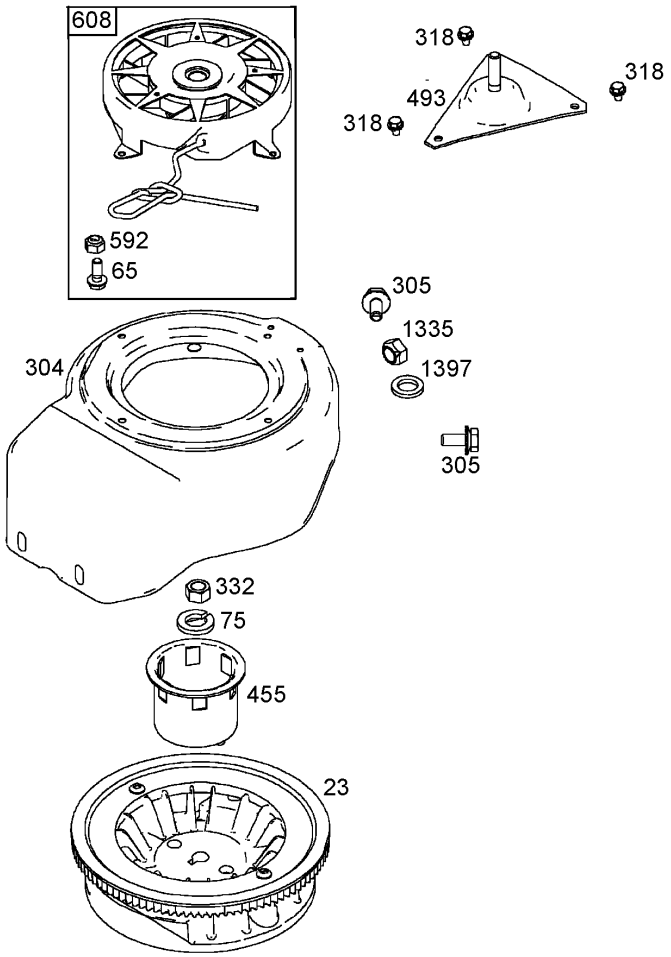

Flywheel, Blower Housing, and Rewind Starter Assemblies
Briggs and Stratton 084132-0120-E1

Ref	Part No.	Qty.	Description
❷23	801246	1	Flywheel
❷65	801243	1	Screw
❷75	801237	1	Washer
❷304	801257	1	Housing-Blower
❷305	801239	1	Screw
❷318	801241	1	Screw
❷332	801238	1	Nut
❷455	801235	1	Cup-Flywheel
❷493	801240	1	Bracket-Mounting
❷592	801244	1	Nut
❷608	801242	1	Starter-Rewind
❷1335	801269	1	Nut
❷1397	801270	1	Washer

Attachments and Accessories

For 38535 - CCR 2450 GTS Snowthrower

Product Name	Model/Part
Snow Cab	88-0600

NOTES


TORO®