FORM NO. 3313-991

TORO®

MODEL NO. 20588-0000001 & Up

PARTS CATALOG

21" H.P. REAR BAGGER

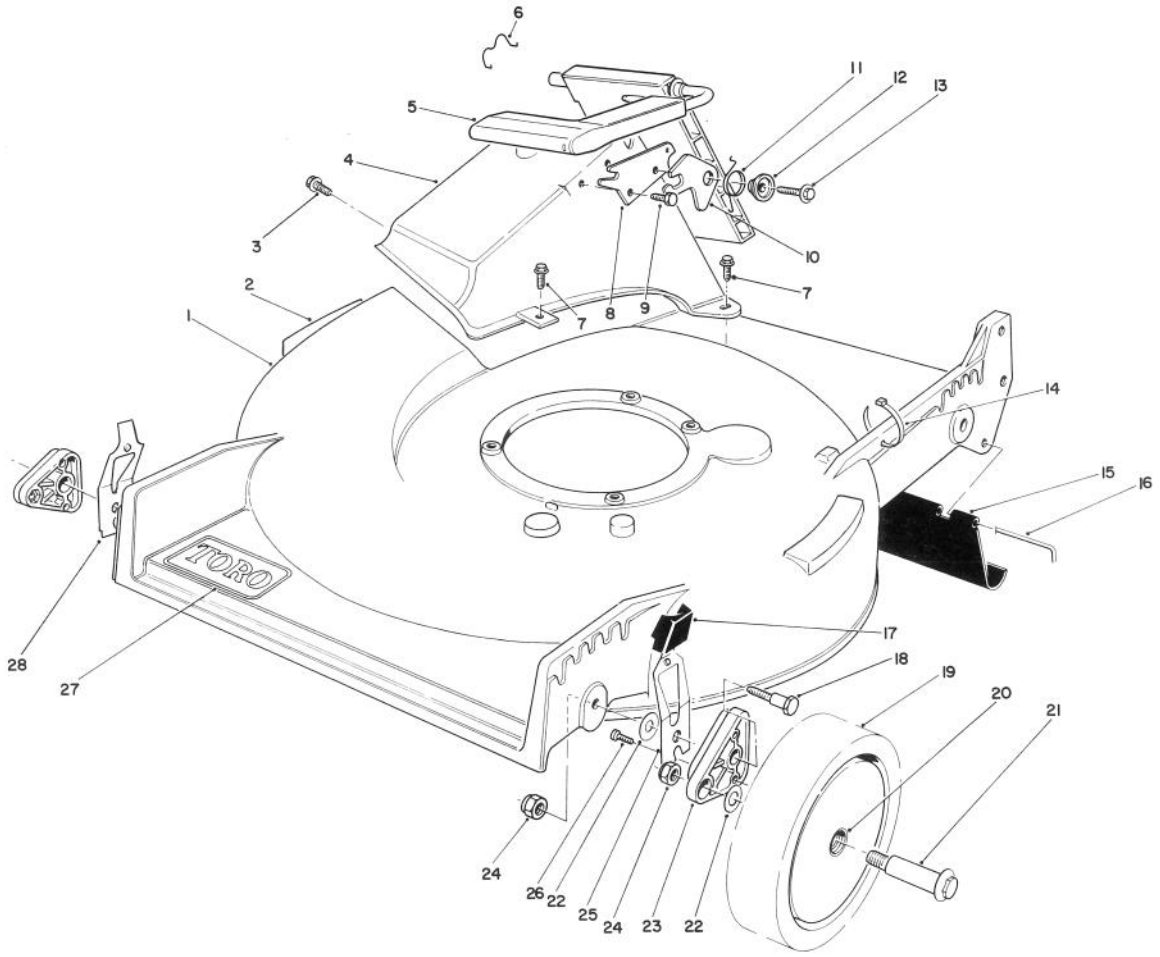

C-0484-90

HOUSING ASSEMBLY

Ref. No.	Part No.	Description	No. Used
1	13-4639	Housing (Incl. Ref. #2)	1
2	39-5770	Decal — Danger	1
3	46-6810	Screw & Washer Assembly	1
4	46-3501	Tunnel — Discharge	1
5	51-0201	Discharge Door Assembly	1
6	47-5840	Retainer — Door	1
7	46-6811	Screw — Self Tapping	3
8	23-1040	Plate — Latch	1
9	46-8090	Screw — Hex Washer Hd. Self Tapping	1
10	42-4010	Latch — Safety	1
11	33-4860	Spring — Torsion	1
12	43-4840	Spacer — Latch	1
13	46-8091	Screw — Hex Washer Hd. Self Tapping	1
14	250-4	Cable Tie	1

Ref. No.	Part No.	Description	No. Used
15	44-0580	Shield — Trailing	1
16	33-3208	Rod — Shield	1
17	25-7740	Knob — Arm	4
18	66-0561	Screw — Pivot	4
19	11-9509	Wheel & Tire Assembly (Incl. Ref. #20)	4
20	27-6250	Bushing	8
21	27-6231	Bolt — Wheel	4
22	40-1940	Washer — Wheel Bolt	8
23	66-0580	Pivot Arm Assembly	4
24	52-3620	Locknut	8
25	71-0570	Spring Arm Assembly L.H.	2
26	32144-85	Screw — Thread Form.	4
27	71-0600	Decal — Toro	1
28	71-0560	Spring Arm Assembly R.H.	2

©The Toro Company — 1989

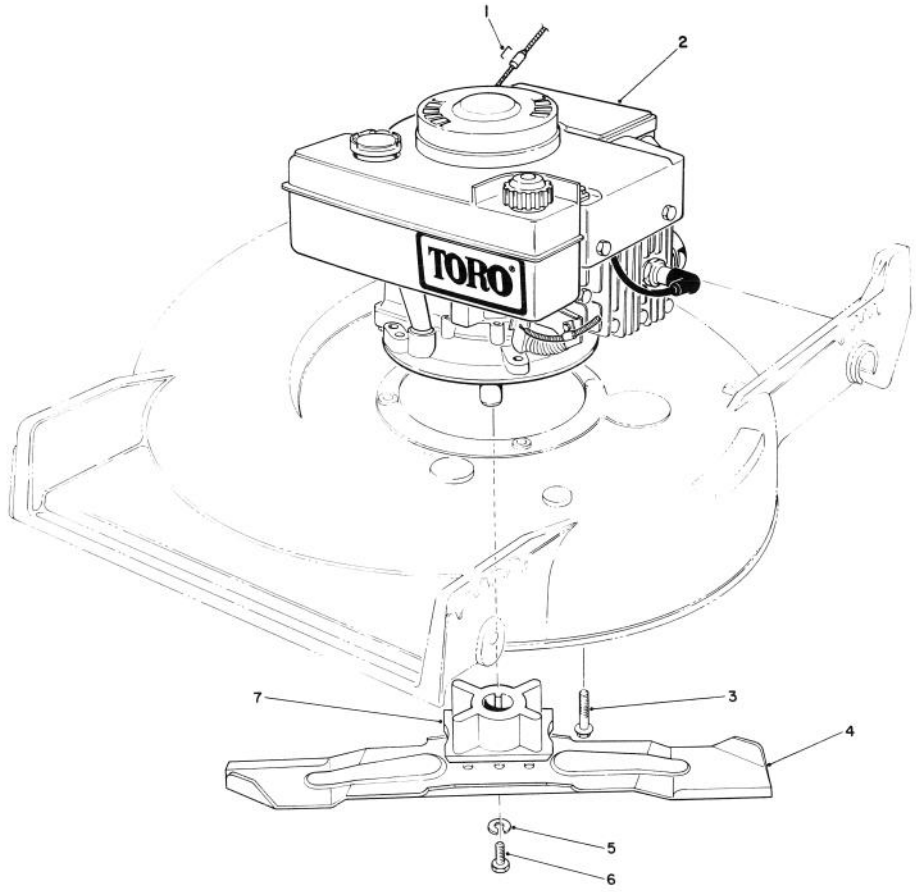

C-0485-90

ENGINE ASSEMBLY

Ref. No.	Part No.	Description	No. Used
1†		Staple	1
2		Engine	1
3	11-0581	Screw — Thread Forming	3
4	42-1000	Blade — 21"	1

Ref. No.	Part No.	Description	No. Used
5	3253-22	Lockwasher	1
6	26-0670	Screw — Blade	1
7	62-7540	Retainer — Blade	1

† Obtain Locally

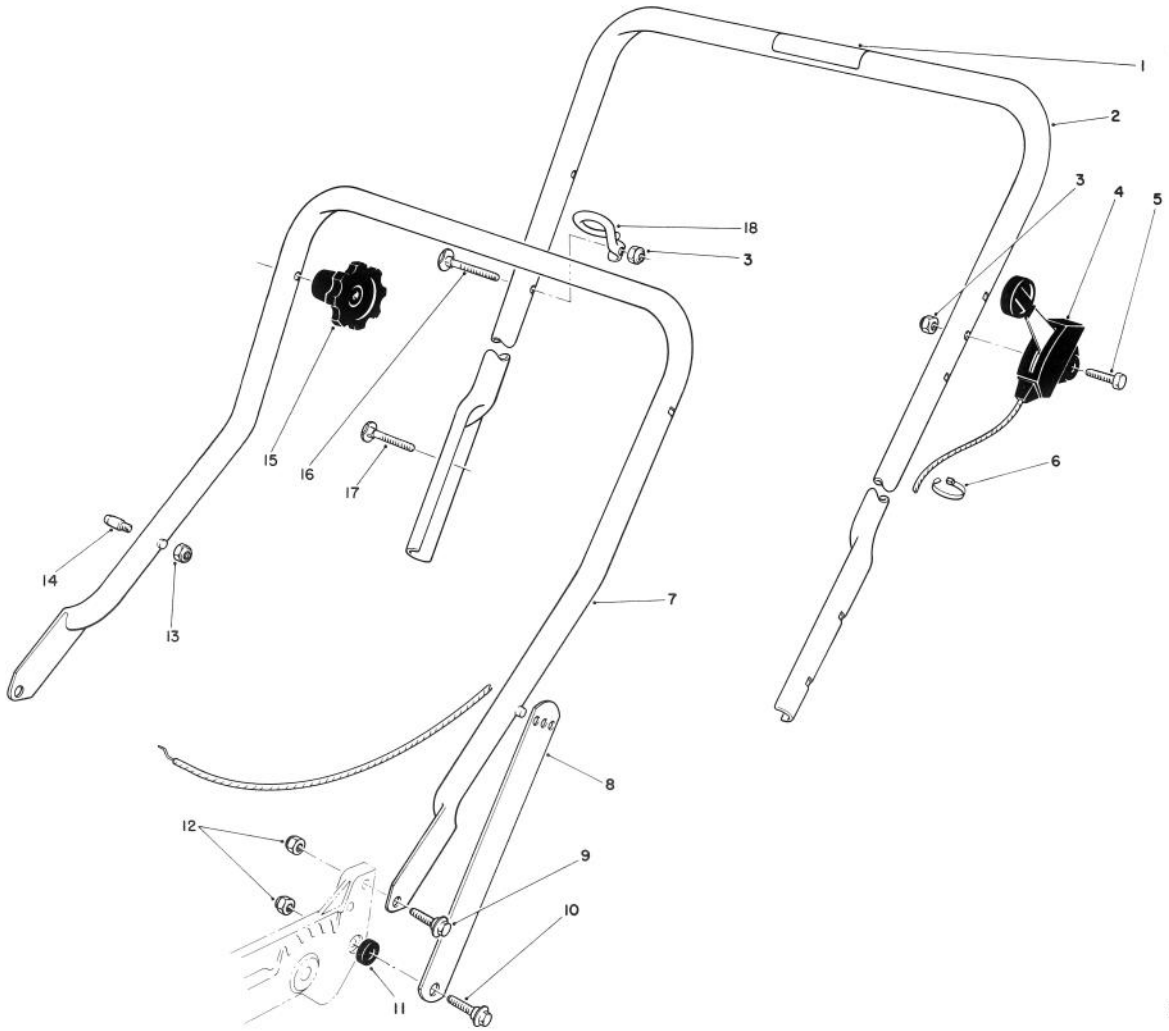

C-0315-90

HANDLE ASSEMBLY

Ref. No.	Part No.	Description	No. Used
1	52-7510	Decal — Instructions	1
2	49-4234	Handle — Upper (Incl. Ref. #1)	1
3	3296-42	Locknut	2
4	70-7570	Control — Throttle	
		Bend Type #1	
		Sheath Lg. 42 inch	
		Wire Lg. 2-3/16 inch	1
5	46-6430	Screw — Handle	1
6	3290-378	Cable Tie	2
7	43-1361	Handle — Lower	1
8	43-1370	Latch — Handle	2

Ref. No.	Part No.	Description	No. Used
9	27-7211	Screw — Shoulder	2
10	27-7210	Screw — Shoulder	2
11	3-3287	Spacer — Handle Latch	2
12	3296-29	Locknut	4
13†	3296-47	Locknut	2
14†	49-2750	Pin — Handle	2
15	19-4050	Knob — Handle Release	2
16	46-6433	Screw — Handle	1
17	17-9421	Screw — Handle	2
18	46-8080	Guide — Rope	1

† Service Replacement Part

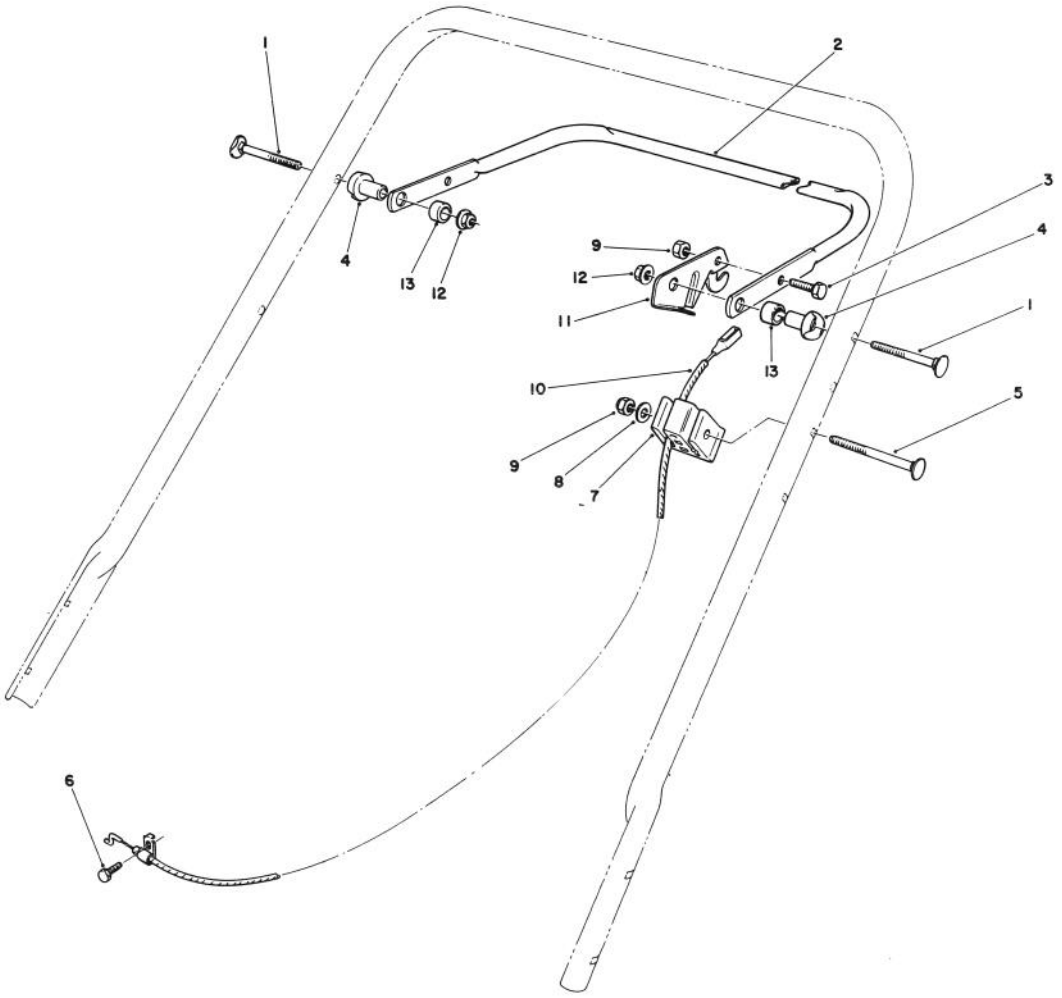

C-0316-90

CONTROL ASSEMBLY

Ref. No.	Part No.	Description	No. Used
1	17-9421	Screw — Handle	2
2	71-3080	Bar — Control	1
3	321-3	Capscrew	1
4	49-1630	Support — Spacer	2
5	46-6434	Screw — Handle	1
6	2210-250	Capscrew	1
7	46-6980	Support — Cable	1

Ref. No.	Part No.	Description	No. Used
8	3256-22	Washer — Flat	1
9	3296-42	Locknut	2
10	46-8012	Cable — Brake	1
11	74-1820	Lever — Control	1
12	3296-58	Locknut	2
13	256-276	Spacer — Nylon	2

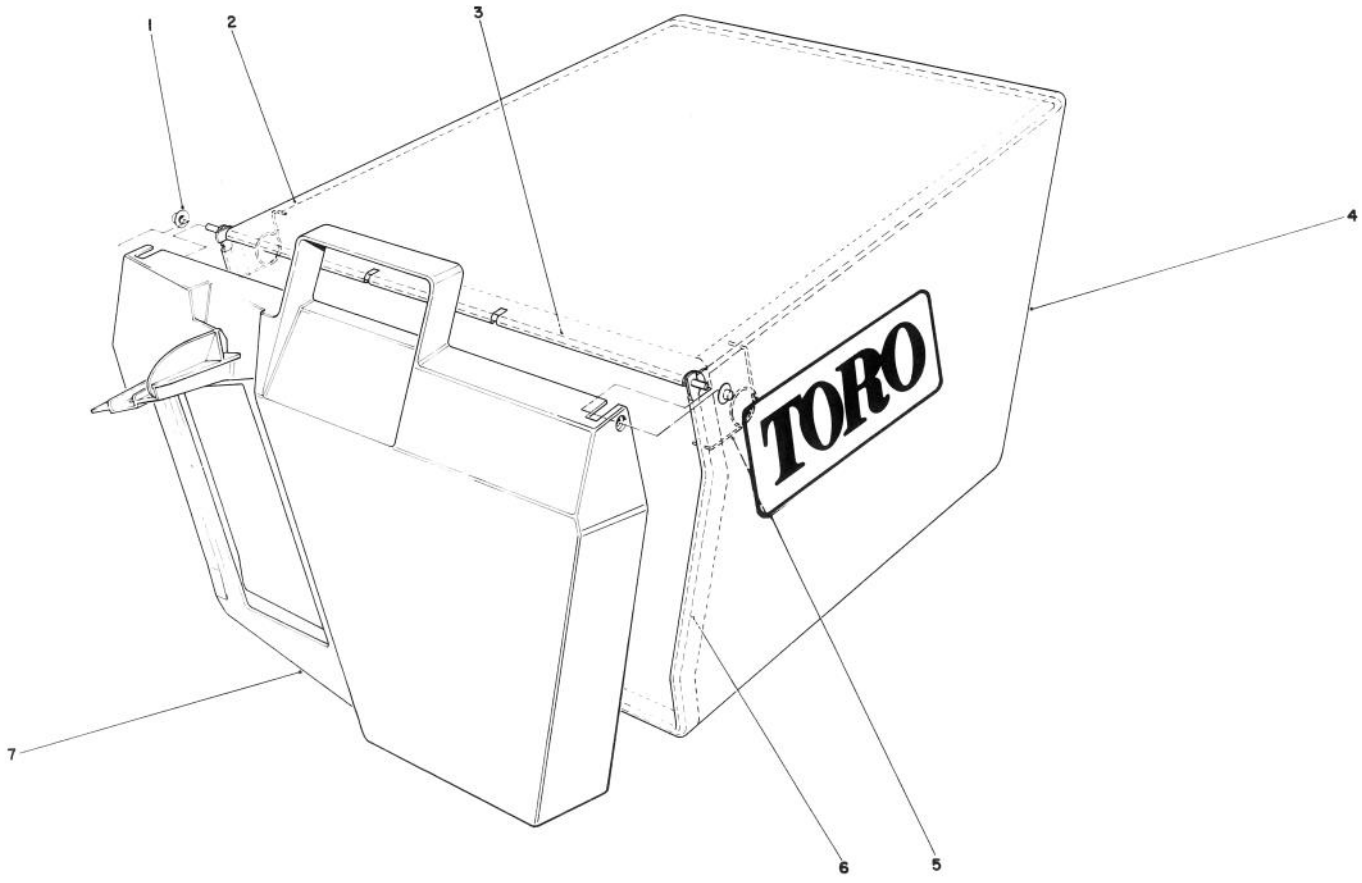

C-0301-90

GRASS BAG ASSEMBLY NO. 11-0159

Ref. No.	Part No.	Description	No. Used
1	3290-422	Push Nut	2
2	42-4030	Bag Frame Upper	1
3	33-4820	Hinge Bag Door	1
4	8-2759	Grass Bag	1

Ref. No.	Part No.	Description	No. Used
5	36-6910	Spring	2
6	43-0030	Frame Bag	1
7	36-1332	Door Grass Bag	1

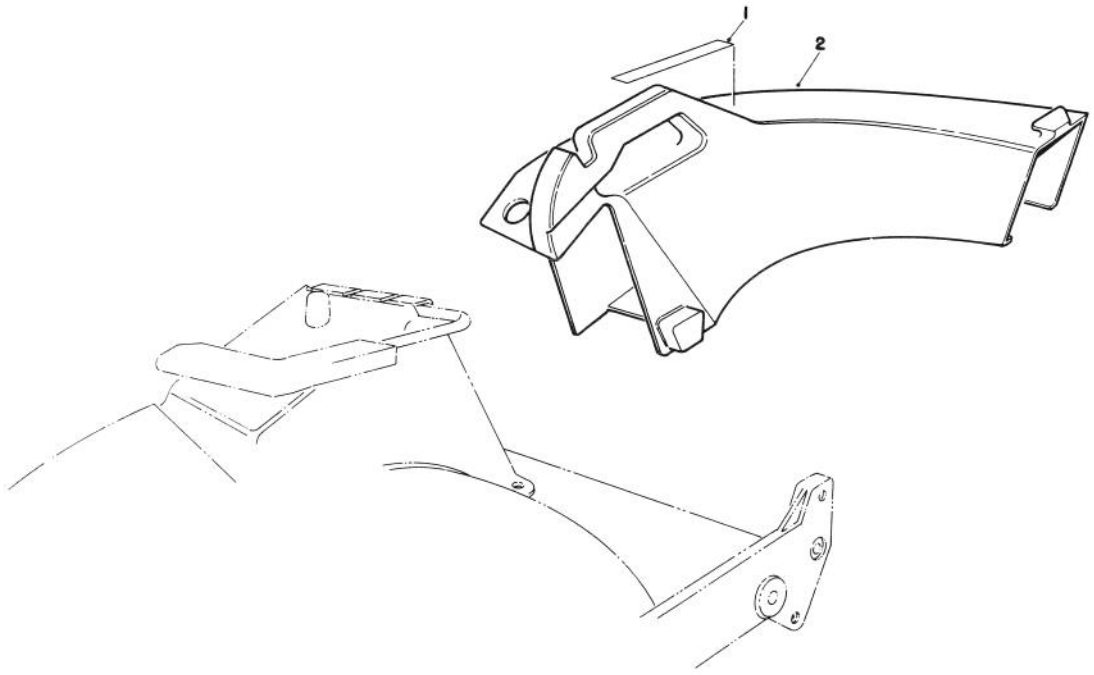

T-0716-90

SIDE DISCHARGE CHUTE MODEL NO. 59168 (Optional)

Ref. No.	Part No.	Description	No. Used
1	39-9120	Decal — Caution	1

Ref. No.	Part No.	Description	No. Used
2	13-2239	Chute — Discharge (Incl. Ref. #1)	1

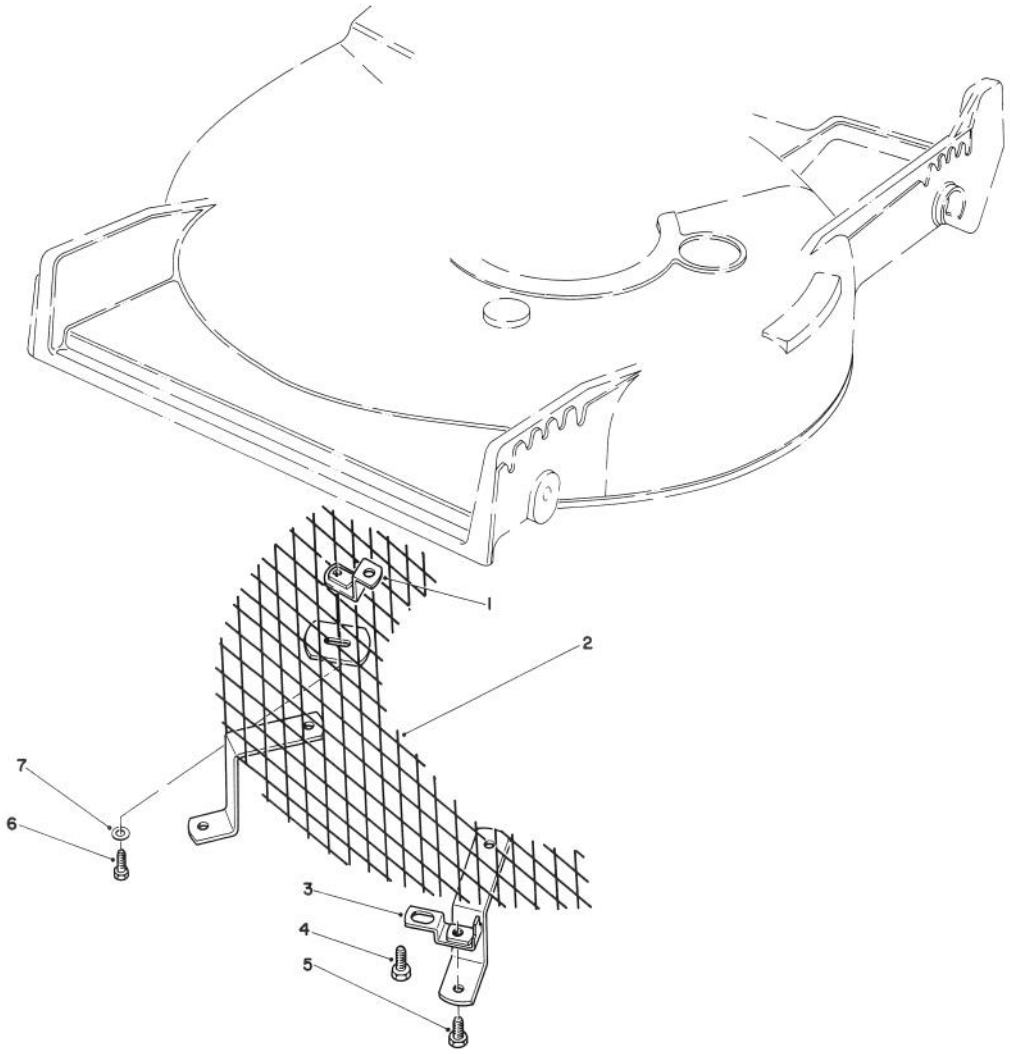

C-0302-90

LEAF SHREDDER KIT MODEL NO. 59157 (Optional)

Ref. No.	Part No.	Description	No. Used
1	47-6260	Bracket	1
2	47-6230	Screen	1
3	46-4880	Mounting Bracket	2
4	32144-11	Screw — Self Tapping	3

Ref. No.	Part No.	Description	No. Used
5	321-3	Capscrew — Hex Hd.	2
6	321-5	Capscrew — Hex Hd.	1
7	3256-1	Washer	1

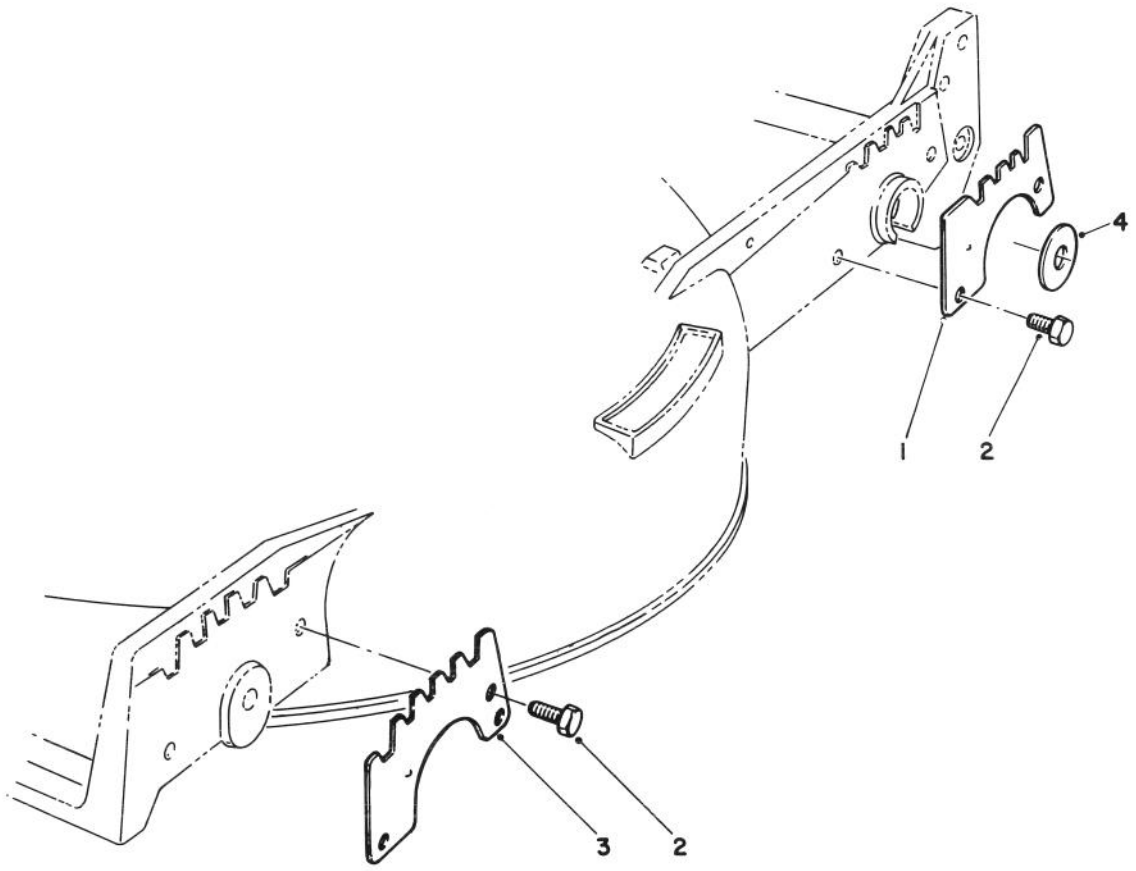

C-0304-90

WEAR PLATE KIT MODEL NO. 49-4080 (Optional)

Ref. No.	Part No.	Description	No. Used
1	49-4070	Plate — Wear, Rear	2
2	32104-17	Screw — Thread Forming	8

Ref. No.	Part No.	Description	No. Used
3	43-5050	Plate — Wear, Front	2
4	33-0390	Washer	2

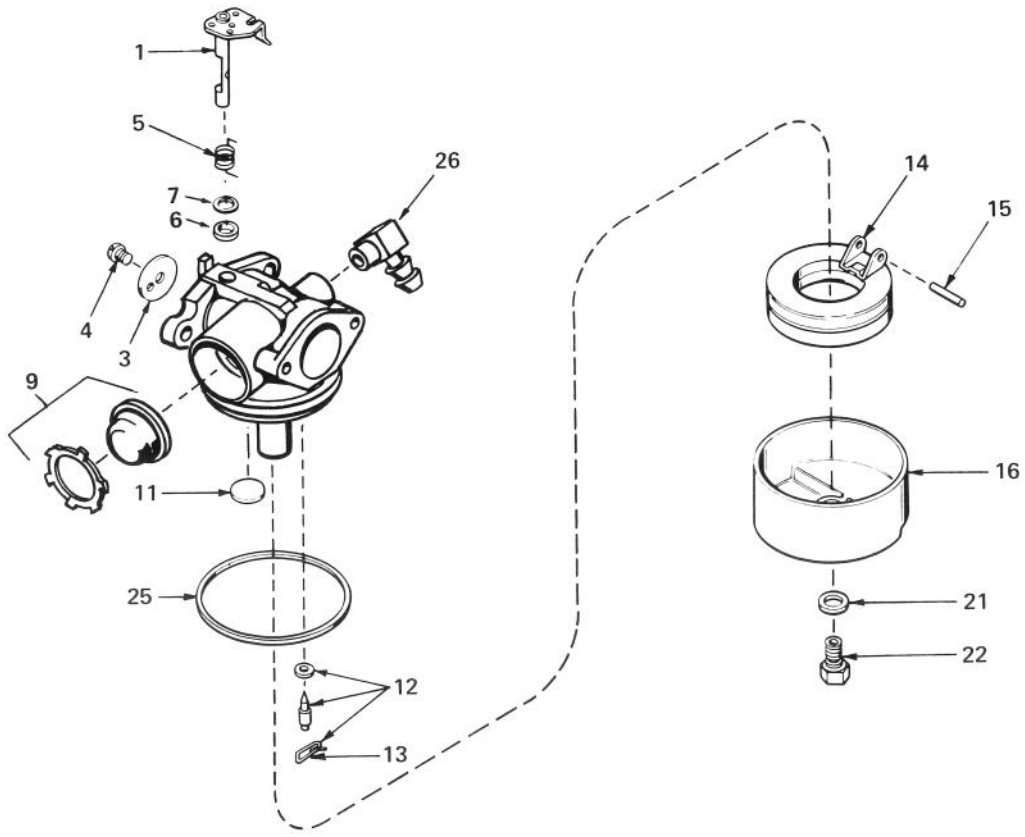

CARBURETOR NO. 632098

Ref. No.	Part No.	Description	No. Used
1	631615	Shaft & Lever Assy. — Throttle	1
3	631616	Shutter — Throttle	1
4	650506	Screw — Throttle Shutter	1
5	631767	Spring — Throttle Return	1
6	631971	Seal — Dust	1
7	631184	Washer — Flat	1
9	632047	Primer Assembly	1
11	631027	Plug — Welch	1
12	631021	Inlet Needle — Seat & Clip Assy. (Incl. Ref. #13)	1

Ref. No.	Part No.	Description	No. Used
13	631022	Clip — Inlet Needle	1
14	632019	Float — Carburetor	1
15	631024	Shaft — Float	1
16	631700	Bowl — Float	1
21	631334	Gasket — Bowl-To-Body	1
22	631937	Nut — Float Bowl	1
25	631028	Gasket — Bowl-To-Body	1
26	631807	Fitting — Fuel Inlet	1

ENGINE TECUMSEH MODEL NO. TVS100-44015B

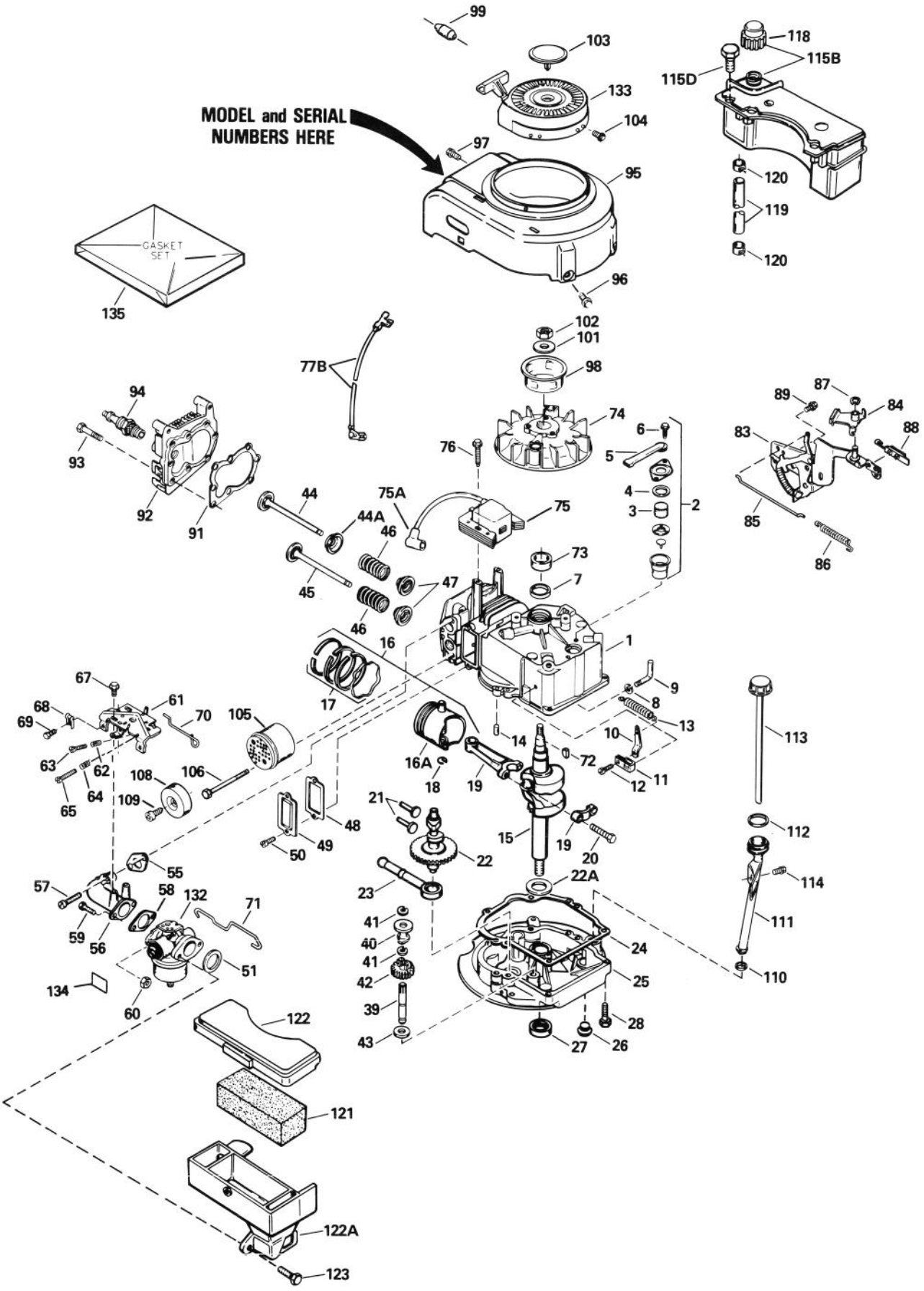

ENGINE TECUMSEH MODEL NO. TVS100-44015B

Ref. No.	Part No.	Description	No. Used
1	35010	Cylinder Assembly (Incl. Ref. #7 & 14)	1
2	34214A	Breather Assembly (Incl. Ref. #3-6)	1
3	33734	Element — Breather	1
4	*33735	Gasket — Breather	1
5	33886	Tube — Breather	1
6	30200	Screw — Hex Washer Hd.	2
7	32600	Seal — Oil	1
8	28277	Washer — Flat	1
9	30589	Rod — Governor (Incl. Ref. #8)	1
10	31383A	Lever — Governor	1
11	31335	Clamp — Governor Lever	1
12	650548	Screw — Hex Washer Hd.	1
13	31361	Spring — Extension	1
14	26727	Pin — Dowel	2
15	35482	Crankshaft Assembly	1
16	35544	Piston — Pin & Ring Assy. (Std.) (Incl. Ref. #16A, 17 & 18)	1
16	35545	Piston — Pin & Ring Assembly (.010 oversize) (Incl. Ref. #16A, 17 & 18)	1
16	35546	Piston — Pin & Ring Assembly (.020 oversize) (Incl. Ref. #16A, 17 & 18)	1
16A	35541	Piston & Pin Assembly (Std.) (Incl. Ref. #18)	1
16A	35542	Piston & Pin Assembly (.010 oversize) (Incl. Ref. #18)	1
16A	35543	Piston & Pin Assembly (.020 oversize) (Incl. Ref. #18)	1
17	35547	Ring Set — Piston (Std.)	1
17	35548	Ring Set — Piston (.010 oversize)	1
17	35549	Ring Set — Piston (.020 oversize)	1
18	20381	Ring — Piston Pin Retaining	2
19	30963B	Rod Assembly — Connecting (Incl. Ref. #20)	1
20	32610A	Bolt — Connecting Rod	2
21	27241	Valve — Lifter	2
22	33553	Camshaft (Mechanical Compression Release)	1
22A	32323	Washer — Thrust	1
23	29914	Pump Assembly — Oil	1
24	*35261	Gasket — Mounting Flange	1
25	34311B	Flange — Mounting (Incl. Ref. #26, 27 & 39)	1
26	27244	Plug — Oil Drain	1
27	27897	Seal — Oil	1
28	650488	Screw — Hex Hd.	6
39	30574	Shaft — Governor	1
40	30588A	Spool — Governor	1
41	29193	Ring — Retaining	1
42	30591	Gear Assembly — Governor (Incl. Ref. #43)	1
43	35479	Washer — Flat	1
44	29314B	Valve — Intake (Std.) (Incl. Ref. #47)	1
44	29315C	Valve — Intake (1/32" oversize) (Incl. Ref. #47)	1
44A	35390	Seal Assy. — Intake Valve	1
45	29313C	Valve — Exhaust (Std.) (Incl. Ref. #47)	1
45	29315C	Valve — Exhaust (1/32" oversize) (Incl. Ref. #47)	1
46	31672	Spring — Valve	2
47	31673	Cap — Lower Valve Spring	2
48	*27234A	Gasket — Valve Spring Box	1
49	32755	Cover — Valve Spring Box	1
50	650128	Screw — Hex Hd.	2
51	*34338	Gasket — Air Cleaner	1
55	*34690A	Gasket — Intake Pipe	1
56	31384A	Pipe — Intake (Incl. Ref. #55)	1
57	650451	Screw — Hex Hd.	2
58	*26756	Gasket — Carburetor	1
59	6201	Screw — Hex Hd.	2
60	29752	Nut & Lockwasher	2
61	33131A	Bracket Assembly — Control (Incl. Ref. #62-65)	1
62	33802	Spring — Compression	1
63	650777	Screw — Fil. Hd.	1
64	31342	Spring — Compression	1
65	650549	Screw — Fil. Hd.	1
67	30200	Screw — Hex Washer Hd.	2
68	27793	Clip — Conduit	1
69	28942	Screw — Hex Washer Hd.	1
70	34337	Link — Governor Spring	1
71	34336	Link — Throttle	1
72	611004	Key — Flywheel	1
73	34080	Spacer — Flywheel Key	1
74	611112	Flywheel	1
75	34443A	Solid State Assembly	1
75A	610118	Cover — Spark Plug	1
76	650814	Screw — Torx Hex Washer Hd.	2
77B	34961	Wire — Ground	1
83	35015A	Bracket — S.E. Brake	1
84	34968	Lever — Brake	1
85	34966	Link — Control	1
86	34965	Spring — Extension	1
87	32309	Ring — Retaining	1
88	610973	Terminal Assembly	1
89	650839	Screw — Hex Washer Hd.	2
91	*33015A	Gasket — Cylinder Head	1
92	34342	Head — Cylinder	1
93	6021A	Screw — Hex Flange Hd.	8
94	35395	Spark Plug — Resistor (Champion RJ-19LM or equivalent)	1

* Indicates items included in Gasket Set, Ref. #135

ENGINE TECUMSEH MODEL NO. TVS100-44015B (Continued)

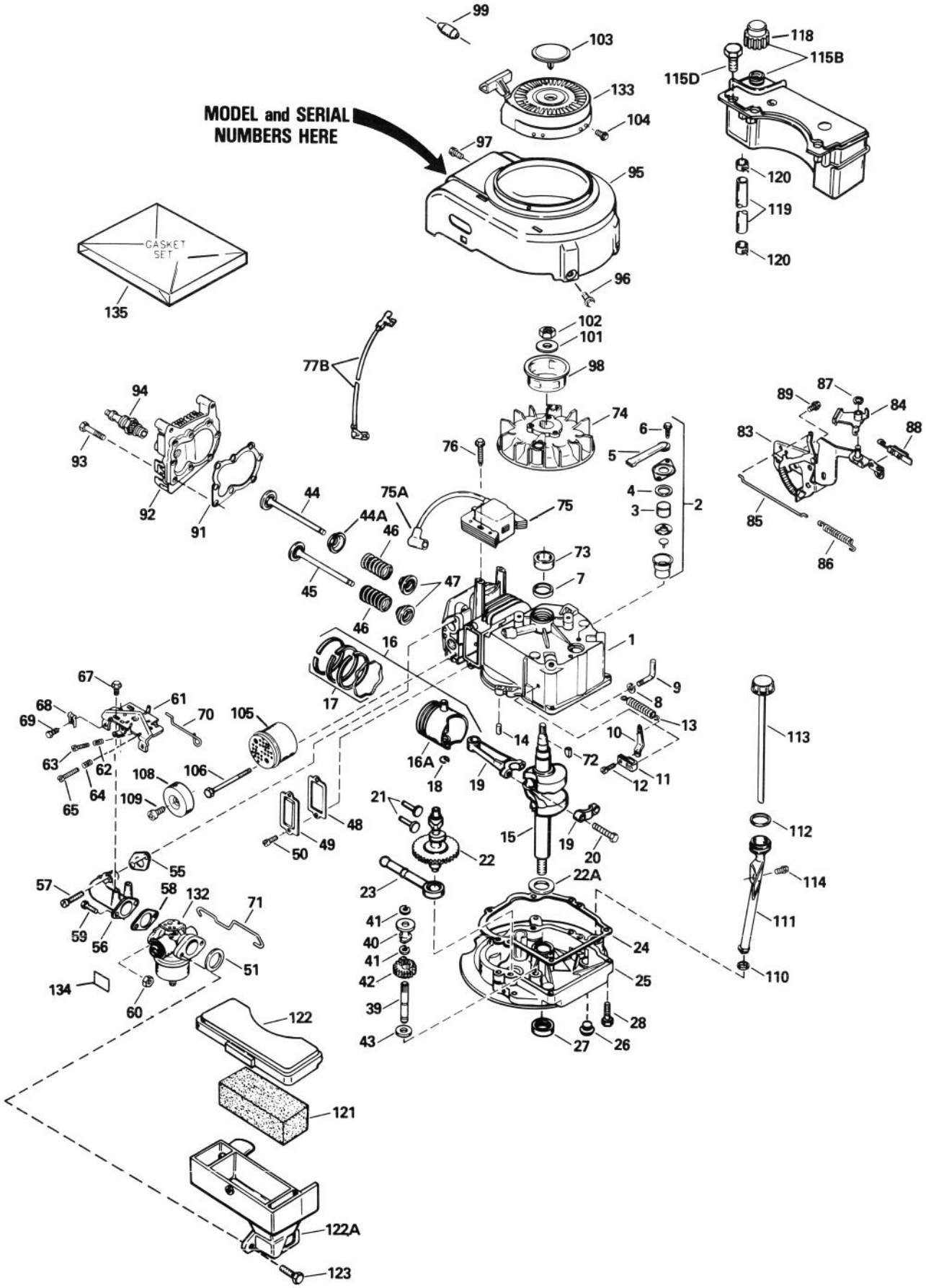

ENGINE TECUMSEH MODEL NO. TVS100-44015B (Continued)

Ref. No.	Part No.	Description	No. Used
95	35485	Housing — Blower	1
96	650831	Screw — Hex Washer Hd.	2
97	30200	Screw — Hex Washer Hd.	2
98	35000	Hub — Starter	1
99	34985	Retainer — Starter Roper (ECV)	1
101	650815	Washer — Belleville	1
102	650816	Nut — Flywheel	1
103	35392	Plug — Starter	1
104	650884	Screw — Hex Washer Hd.	2
105	27181B	Muffler Assembly (Incl. Ref. #106)	1
106	650795	Screw — Hex Hd.	2
108	32431	Cover — Muffler	1
109	650760	Screw — Pan Hd.	1
110	34265	Gasket — Fill Tube	1
111	35577	Tube — Oil Fill	1
112	35499	"O" Ring	1
113	35578	Dipstick — Oil Fill	1
114	650562	Screw — Hex Washer Hd.	1
115B	34476	Tank Assembly (Incl. Ref. #118 & 126)	1
115D	28763	Screw — Hex Washer Hd.	1
118	33032	Cap — Fuel	1
119	30705	Line — Fuel	1
120	26460	Clamp — Fuel Line	1
121	34340	Filter — Air Cleaner	1
122	34341A	Cover — Air Cleaner	1
122A	34858	Body — Air Cleaner	1
123	650806	Screw — Hex Washer Hd.	2
132	632098	Carburetor (Incl. Ref. #58)	1
133	590621	Starter — Rewind	1
134	34144	Decal — Primer	1
135	33238D	Gasket Set (Incl. Items Marked *)	1

* Indicates parts included in Gasket Set, Ref. #135.

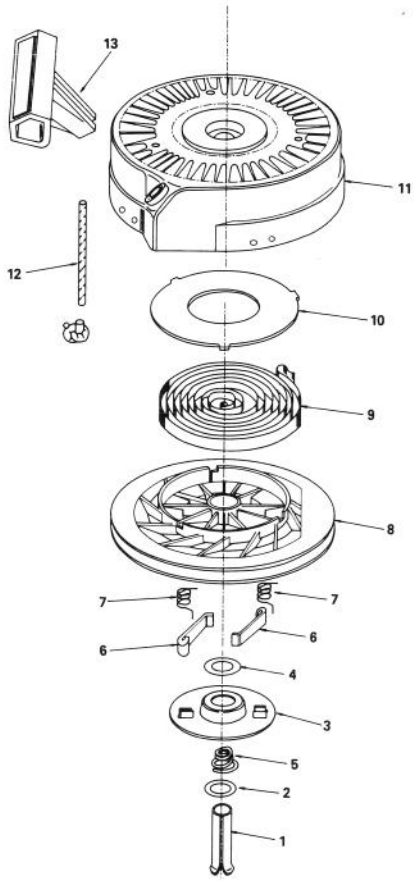

REWIND STARTER NO. 590621

Ref. No.	Part No.	Description	No. Used
1	590599A	Pin — Spring (Incl. Ref. #4)	1
2	590600	Washer	1
3	590615	Retainer	1
4	590601	Washer	1
5	590598	Spring — Brake	1
6	590616	Dog — Starter	2
7	590617	Spring — Dog	2

Ref. No.	Part No.	Description	No. Used
8	590618	Pulley	1
9	590619	Spring — Rewind	1
10	590620	Cover — Spring	1
11	590622	Housing Assembly — Starter	1
12	590535	Rope — Starter (Length 98" & 9/64" dia.)	1
13	590452	Handle — Starter	1

PRODUCT CHANGES

In an effort to make improvements available to TORO owners as quickly as possible, minor changes are incorporated into Toro's products from time to time that do not become immediately shown in the Parts Catalog. If such a change apparently has been made in your unit, which is not reflected in your manual, see your TORO Distributor or his Authorized TORO Service Dealer for information and part numbers.

IDENTIFICATION AND ORDERING

MODEL AND SERIAL NUMBERS

The Mower has two identification numbers: a model number and a serial number. The two numbers are stamped on a decal which is located on the mower housing between the rear wheels. In any correspondence concerning the mower, supply model and serial numbers to assure that correct information and replacement parts are obtained.

To order replacement parts from an Authorized TORO Service Dealer, supply the following information:

1. Model and serial numbers of the mower.
2. Part number, description, and quantity of part(s) desired.

Note: Do not order by reference number if a parts catalog is being used; use the PART NUMBER.

The Toro Promise

A Two Year Limited Warranty

On All

Gasoline Powered Consumer Products

The Toro Company promises to repair your TORO Product if defective in materials or workmanship. The following time periods from the date of purchase apply:

Residential Product ..... 2 Years
Residential Products Used Commercially ..... 45 Days

The costs of parts and labor are included, but the customer pays the transportation costs. Just return any residential product to an Authorized TORO Service Dealer or TORO Distributor.

Should you feel your TORO Product is defective and wish to rely on The Toro Promise, the following procedure is recommended:

1. Contact any Authorized TORO Service Dealer, TORO Master Service Dealer, or TORO Distributor (the Yellow Pages of your telephone directory is a good reference source).
2. He will either instruct you to return the product to him or recommend another Authorized TORO Service outlet which might be more convenient.
3. Bring the product along with your original sales slip, or other evidence of purchase date, to the service dealer.
4. The servicing dealer will inspect the unit, advise you whether the product is defective and, if so, make all repairs necessary to correct the defect without extra charge to you.

If for any reason you are dissatisfied with the dealer's analysis of the defect or the service performed, you may contact us.

Write:

TORO Consumer Service Department
8111 Lyndale Avenue South
Minneapolis, Minnesota 55420

The above remedy of product defects through repair by an Authorized TORO Service Dealer is the purchaser's sole remedy for any defect.

THERE IS NO OTHER EXPRESS WARRANTY. ALL IMPLIED WARRANTIES OF MERCHANTABILITY AND FITNESS FOR USE ARE LIMITED TO THE DURATION OF THE EXPRESS WARRANTY.

Some states do not allow limitations on how long an implied warranty lasts, so the above limitation may not apply to you.

This warranty applies only to parts or components which are defective and does not cover repairs necessary due to normal wear, misuse, accidents, or lack of proper maintenance. Regular, routine maintenance of the unit to keep it in proper operating condition is the responsibility of the owner.

All warranty repairs reimbursable under The Toro Promise must be performed by an Authorized TORO Service Dealer using Toro approved replacement parts.

Repairs or attempted repairs by anyone other than an Authorized TORO Service Account are not reimbursable under The Toro Promise. In addition, these unauthorized repair attempts may result in additional malfunctions, the correction of which is not covered by warranty.

THE TORO COMPANY IS NOT LIABLE FOR INDIRECT, INCIDENTAL OR CONSEQUENTIAL DAMAGES IN CONNECTION WITH THE USE OF THE PRODUCT INCLUDING ANY COST OR EXPENSE OF PROVIDING SUBSTITUTE EQUIPMENT OR SERVICE DURING PERIODS OF MALFUNCTION OR NON-USE.

Some states do not allow the exclusion or limitation of incidental or consequential damages, so the above limitation or exclusion may not apply to you.

This warranty gives you specific legal rights, and you may also have other rights which vary from state to state.

COUNTRIES OTHER THAN THE UNITED STATES OR CANADA

Customers who have purchased TORO products exported from the United States or Canada should contact their TORO Distributor (Dealer) to obtain guarantee policies for your country, province or state. If for any reason you are dissatisfied with your Distributor's service or have difficulty obtaining guarantee information, contact the TORO importer. If all other remedies fail, you may contact us at The Toro Company.

Compliance with Radio Interference Regulations Certified.
Certifie Conforme au Reglement sur le Brouillage Radioelectrique.

MAINTENANCE RECORD

Date	Hours Used	Oil Change	Air Cleaner Service	Lubrication	Sharpen Blade	Winter Storage	Spring Service	Spark Plug Gap