FORM NO. 3313-993

TORO®

MODEL NO. 16776-0000001 & UP

**PARTS CATALOG**

# 21" S.P. SIDE DISCHARGE

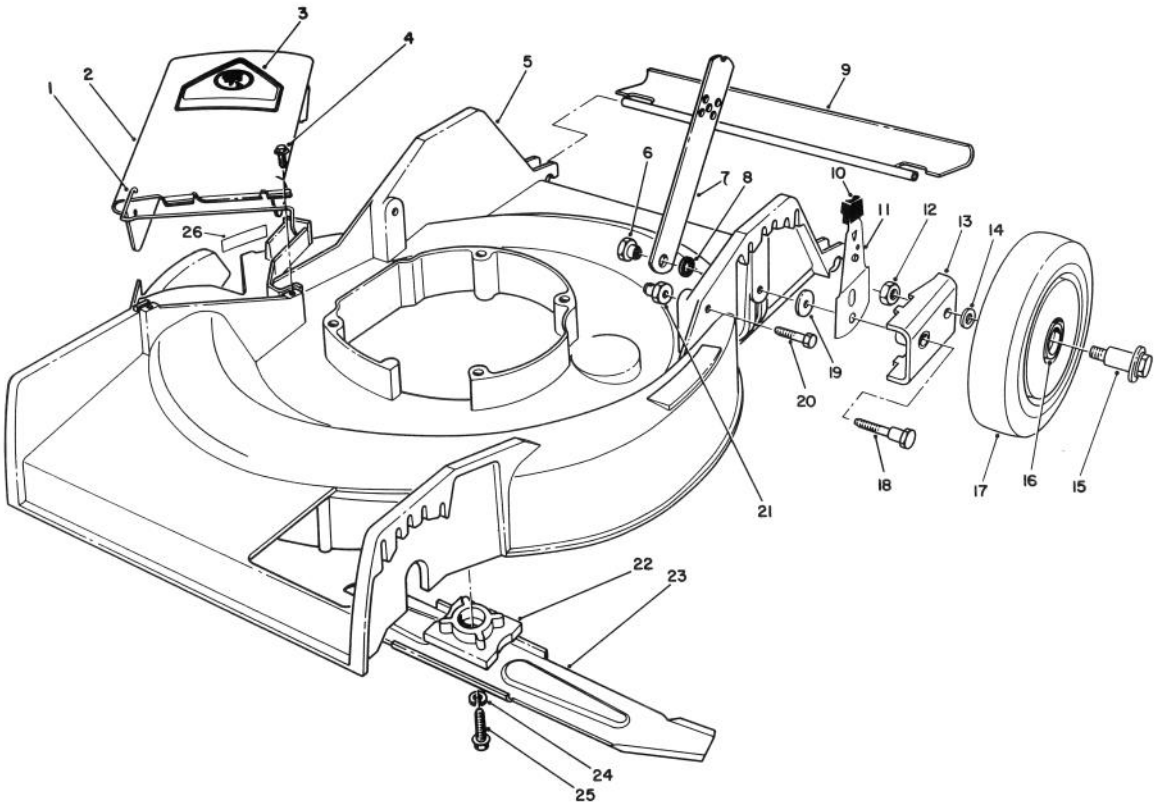


C-0499-90

## HOUSING ASSEMBLY

| Ref. No. | Part No. | Description | No. Used |
|---|---|---|---|
| 1 | 20-2640 | Spring — Hinge | 1 |
| 2 | 13-3429 | Deflector Assembly (Incl. Ref. #1 & 3) | 1 |
| 3 | 56-6270 | Decal — Danger | 1 |
| 4 | 46-6811 | Screw w/Washer | 2 |
| 5 | 13-3489 | Housing — 21" (Incl. Ref. #26) | 1 |
| 6 | 27-6520 | Nut — Shoulder | 2 |
| 7 | 27-7080 | Latch — Handle | 2 |
| 8 | 3-3287 | Spacer — Handle Latch | 2 |
| 9 | 66-5990 | Shield — Rear | 1 |
| 10 | 25-7740 | Knob — Spring Arm | 2 |
| 11 | 66-9260 | Spring Arm Assy. — L.H. Rear | 1 |
| * | 66-9250 | Spring Arm Assy. — R.H. Rear | 1 |
| 12 | 52-3620 | Locknut | 2 |
| 13 | 47-2940 | Pivot Arm Assembly | 2 |
| 14 | 40-1940 | Washer — Wheel Bolt | 2 |
| 15 | 27-6230 | Bolt — Wheel | 2 |
| 16 | 27-6250 | Bushing | 4 |
| 17 | 11-9509 | Wheel & Tire Assembly (Incl. Ref. #16) | 2 |
| 18 | 44-5271 | Screw — Pivot | 2 |
| 19 | 33-0390 | Washer — Pivot | 2 |
| 20 | 322-6 | Hex Hd. Capscrew | 2 |
| 21 | 12-2080 | Nut — Shoulder | 2 |
| 22 | 49-7900 | Retainer — Blade | 1 |
| 23 | 20-2720 | Blade — 21" | 1 |
| 24 | 3253-22 | Lockwasher | 1 |
| 25 | 26-0671 | Blade — Screw | 1 |
| 26 | 62-4200 | Decal — Danger | 1 |

* Not Illustrated

©The Toro Company — 1989

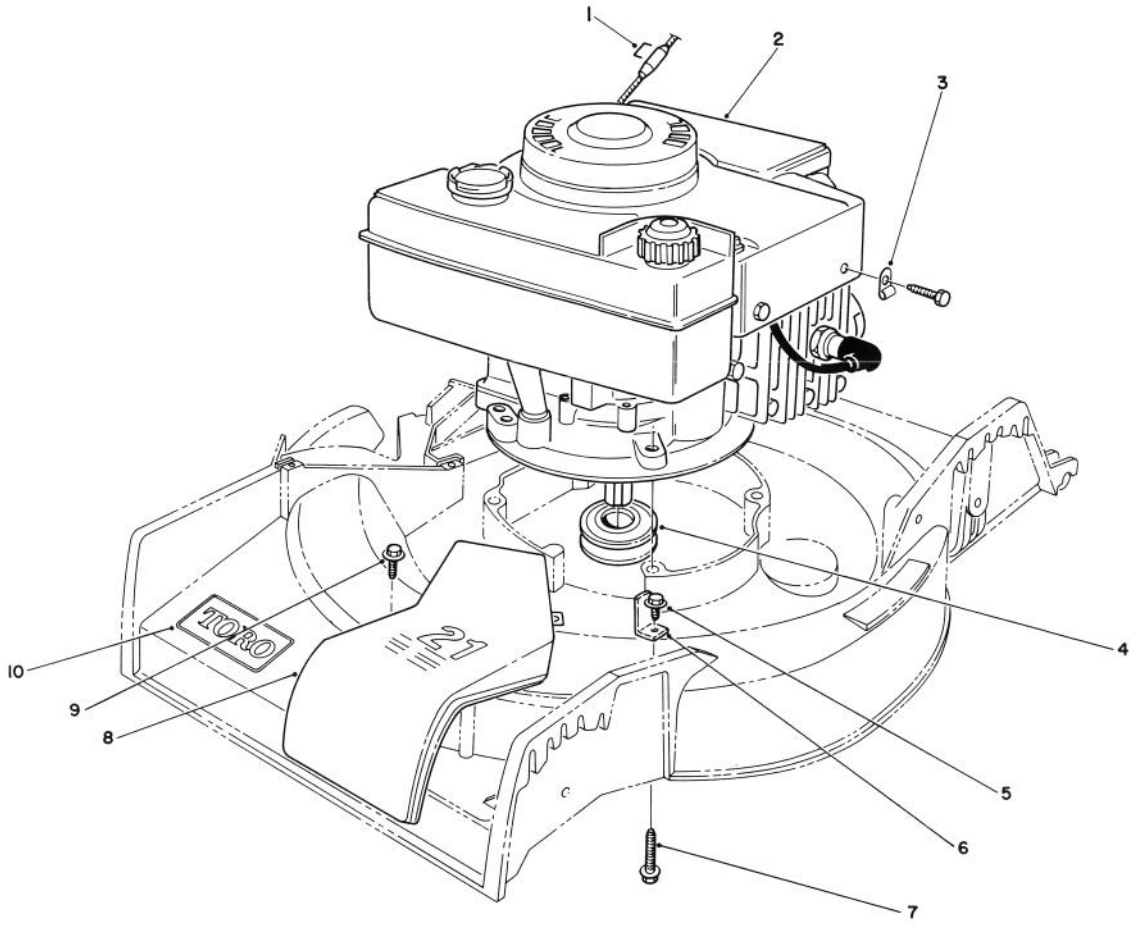


C-0266-90

# ENGINE ASSEMBLY

| Ref. No. | Part No. | Description | No. Used |
|---|---|---|---|
| 1† | | Staple | 1 |
| 2 | | Engine | 1 |
| 3 | 2412-63 | Clamp — Casing | 1 |
| 4 | 46-7910 | Pulley — Driver | 1 |
| 5 | 32144-70 | Hex Hd. Flange Screw | 1 |

| Ref. No. | Part No. | Description | No. Used |
|---|---|---|---|
| 6 | 70-8080 | Belt Guide | 1 |
| 7 | 11-0580 | Screw — Engine | 3 |
| 8 | 46-4780 | Cover — Belt | 1 |
| 9 | 12-5450 | Screw — Thread Forming | 2 |
| 10 | 70-2200 | Decal — Toro | 1 |

† Obtain locally

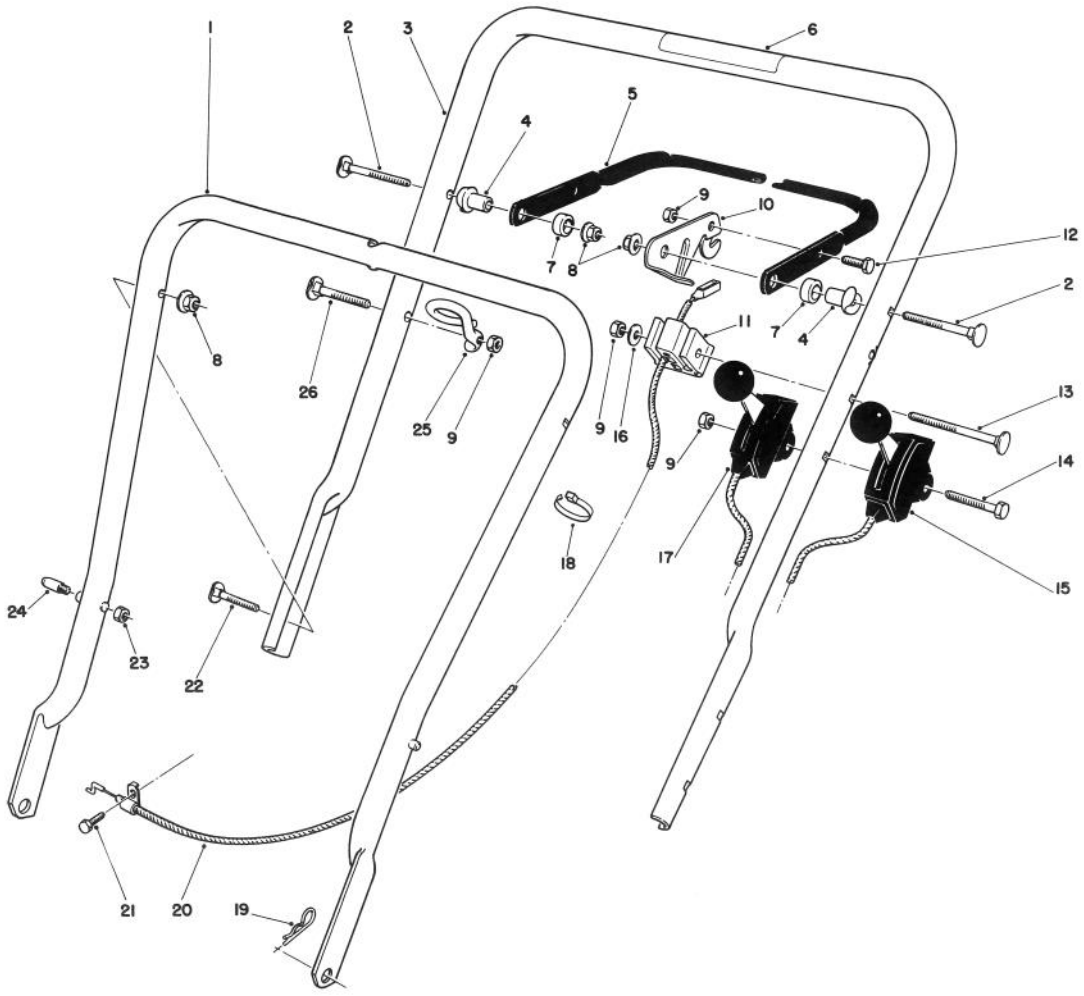


C-0267-90

# HANDLE ASSEMBLY

| Ref. No. | Part No. | Description | No. Used |
|---|---|---|---|
| 1 | 49-1690 | Lower Handle Assembly | 1 |
| 2 | 17-9421 | Screw — Handle | 2 |
| 3 | 13-2369 | Handle — Upper (Incl. Ref. #6) | 1 |
| 4 | 49-1630 | Support — Spacer | 2 |
| 5 | 71-3080 | Bar — Control | 1 |
| 6 | 63-8540 | Decal — Warning | 1 |
| 7 | 256-276 | Spacer — Nylon | 2 |
| 8 | 3296-58 | Nut — Flange Lock | 4 |
| 9 | 3296-42 | Nut — Lock | 4 |
| 10 | 74-1820 | Lever — Control | 1 |
| 11 | 46-6980 | Support — Cable | 1 |
| 12 | 321-3 | Capscrew | 1 |
| 13 | 46-6434 | Screw — Handle | 1 |
| 14 | 321-15 | Capscrew | 1 |
| 15 | 74-3870 | Control — Traction (Bend Type #3) (Sheath Lg. 46") (Wire Lg. 1-1/4") | 1 |

| Ref. No. | Part No. | Description | No. Used |
|---|---|---|---|
| 16 | 3256-22 | Washer — Flat | 1 |
| 17 | 52-0067 | Control — Throttle (Bend Type #1) (Sheath Lg. 30") (Wire Lg. 2-1/8") | 1 |
| 18 | 3290-378 | Cable Tie | 1 |
| 19 | 3290-255 | Pin — Cotter Hair | 2 |
| 20 | 46-8010 | Cable — Brake | 1 |
| 21 | 2210-250 | Capscrew | 1 |
| 22 | 17-9424 | Screw — Handle | 2 |
| †23 | 3296-47 | Nut — Lock | 2 |
| †24 | 49-2750 | Pin — Handle | 2 |
| 25 | 46-8080 | Guide — Rope | 1 |
| 26 | 46-6433 | Screw — Handle | 1 |

† Service Replacement Part

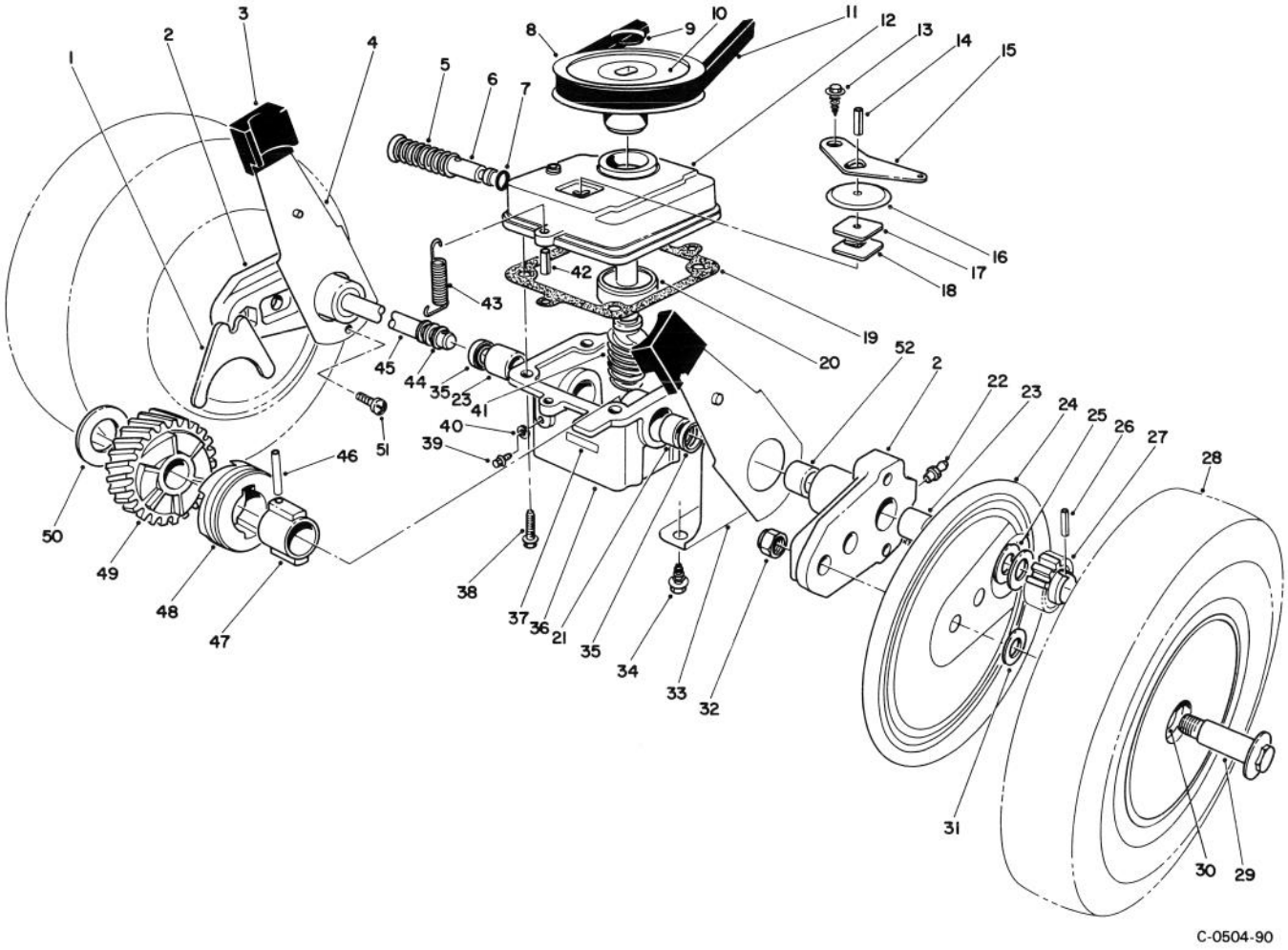


# GEAR CASE ASSEMBLY

| Ref. No. | Part No. | Description | No. Used |
|---|---|---|---|
| 1 | 5-3247 | Fork — Shifter | 1 |
| 2 | 66-6001 | Arm — Pivot (Incl. Ref. #22, 23, & 52) | 2 |
| 3 | 25-7740 | Knob — Arm | 2 |
| 4 | 67-9370 | Spring Arm Assembly | 2 |
| 5 | 3-0731 | Spring | 1 |
| 6 | 46-8240 | Rod — Shifter | 1 |
| 7 | 237-137 | "O" Ring | 1 |
| 8 | 18-9760 | Pulley | 1 |
| 9 | 3290-346 | Retainer — Push On | 1 |
| 10 | 33-2450 | Decal — Caution | 1 |
| 11 | 5-4505 | V-Belt | 1 |
| 12 | 39-1101 | Cover — Gear Case | 1 |
| 13 | 32140-64 | Screw — Self Tapping | 1 |
| 14 | 32121-114 | Roll Pin | 1 |
| 15 | 5-3252 | Arm — Shifter | 1 |
| 16 | 52-7380 | Dust Cover — Transmission | 1 |
| 17 | 52-7370 | Filter — Dust | 1 |
| 18 | 3-0681 | Plate — Latch | 1 |
| 19 | 36-1000 | Gasket — Gear Case | 1 |
| 20 | 47-7250 | Ball Bearing | 1 |
| 21 | 47-2890 | Bushing | 1 |
| 22 | 302-56 | Fitting — Grease | 2 |

| Ref. No. | Part No. | Description | No. Used |
|---|---|---|---|
| 23 | 47-2900 | Bushing | 3 |
| 24 | 63-5270 | Cover — Wheel | 2 |
| 25 | 46-6510 | Washer — Thrust | 4 |
| 26 | 32121-98 | Pin — Coil | 2 |
| 27 | 46-6520 | Gear — Pinion | 2 |
| 28 | 11-9519 | Wheel, Tire, & Gear Assembly (Incl. Ref. #30) | 2 |
| 29 | 27-6230 | Bolt — Wheel | 2 |
| 30 | 27-6250 | Bushing — Wheel | 4 |
| 31 | 40-1940 | Washer — Wheel Bolt | 2 |
| 32 | 52-3620 | Locknut | 2 |
| 33 | 68-9000 | Cap — End | 2 |
| 34 | 32144-70 | Screw — Self Tapping | 4 |
| 35 | 47-6730 | Seal — Oil | 2 |
| 36 | 8-0479 | Gear Case (Incl. Ref. #21, 23, & 35) | 1 |
| 37 | 40-4755 | Decal | 1 |
| 38 | 11-9760 | Screw | 4 |
| 39 | 28-1550 | Screw — Nylon | 1 |
| 40 | 46-9640 | Gasket | 1 |
| 41 | 8-5679 | Worm Shaft & Gear (Incl. Ref. #49) | 1 |
| 42 | 32121-1 | Pin — Roll | 2 |

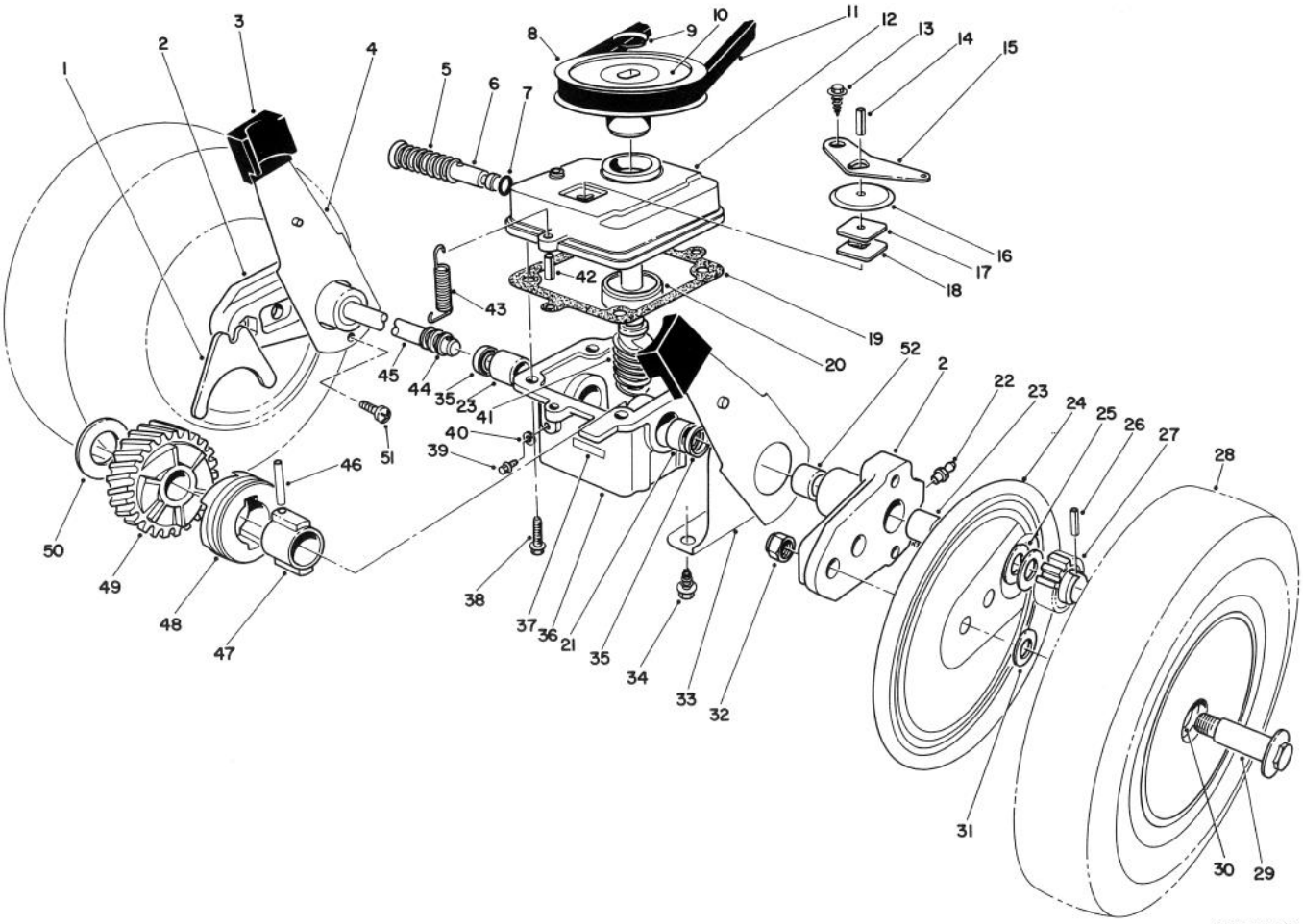


# GEAR CASE ASSEMBLY (Continued)

| Ref. No. | Part No. | Description | No. Used |
|---|---|---|---|
| 43 | 17-4490 | Spring — Belt Tension | 1 |
| 44 | 24-7920 | Cover — Drive Shaft | 1 |
| 45 | 66-6020 | Shaft — Drive | 1 |
| 46 | 32121-88 | Pin — Coil | 1 |
| 47 | 3-0721 | Sleeve | 1 |
| 48 | 19-5660 | Jaw — Clutch | 1 |
| 49 | | Helical Gear | 1 |

| Ref. No. | Part No. | Description | No. Used |
|---|---|---|---|
| 50 | 3-0724 | Washer — Thrust | 1 |
| 51 | 63-8590 | Screw — Button Hd. | 2 |
| * | 13-3479 | Gear Case Assy. (Complete) | 1 |
| * | 27-0490 | Bearing & Shaft Tool | 1 |
| *† | 39-9640 | Metric Bearing Tool | 1 |
| * | 27-0460 | Tool Bushing | 1 |
| 52 | 70-9760 | Bushing | 2 |

* Not Illustrated
† Use with 27-0490 Bearing & Shaft Tool

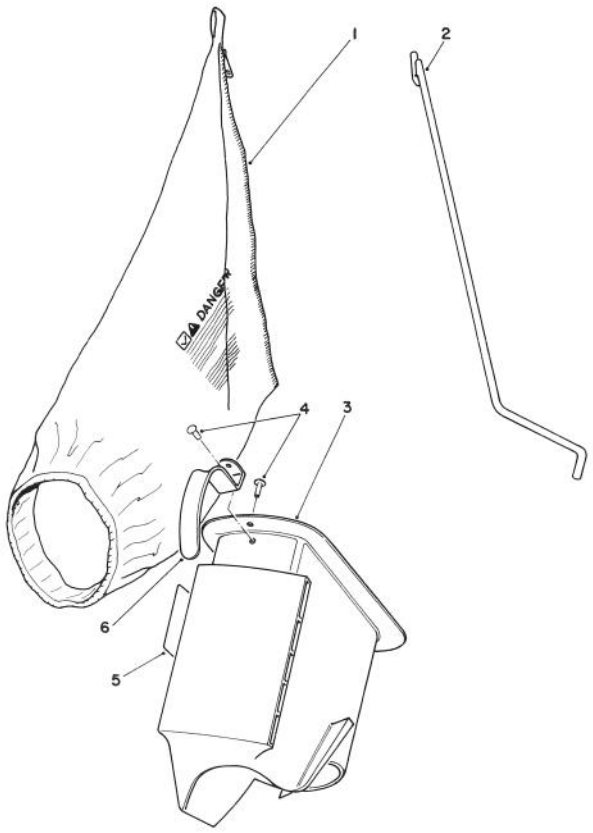


C-0187-90

# BAGGING KIT NO. 47-6510 (Optional)

| Ref. No. | Part No. | Description | No. Used |
|---|---|---|---|
| 1 | 6-0929 | Grass Bag | 1 |
| 2 | 47-5830 | Bag Rod | 1 |
| 3 | 6-1089 | Grass Chute (Incl. Ref. #4 & 6) | 1 |

| Ref. No. | Part No. | Description | No. Used |
|---|---|---|---|
| 4 | 3295-26 | Rivet | 2 |
| 5 | 36-5230 | Decal — Bag Chute | 1 |
| 6 | 20-4650 | Handle Chute | 1 |

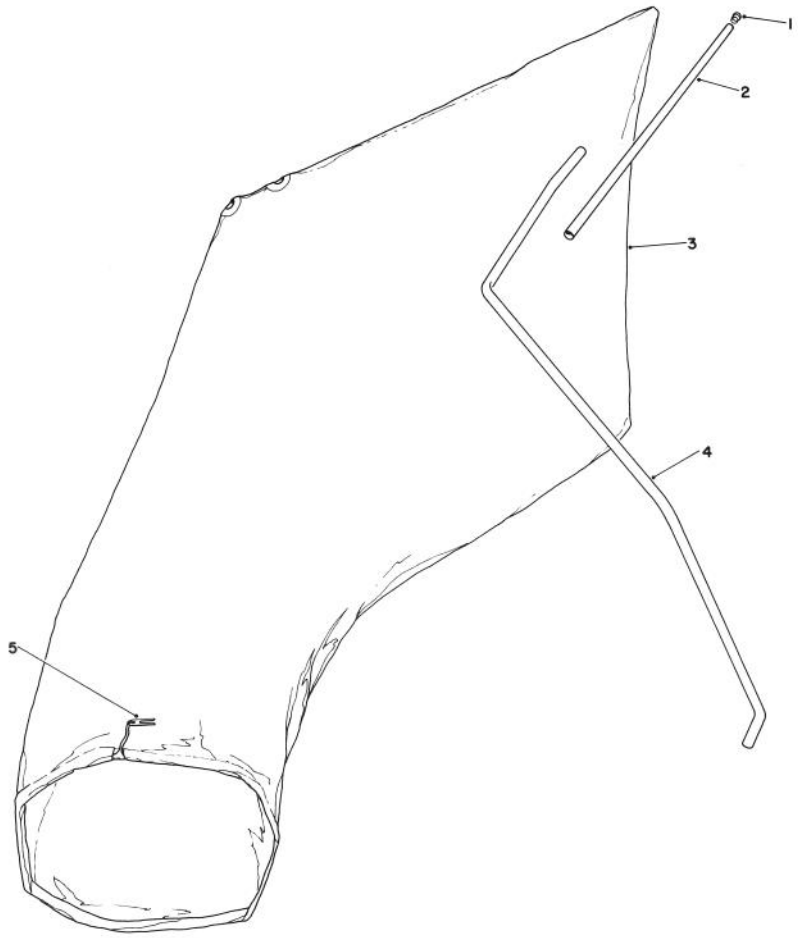


C-0190-90

# GIANT BAGGING KIT NO. 29-9750 (Optional)

| Ref. No. | Part No. | Description | No. Used |
|---|---|---|---|
| 1 | 2410-29 | Cap | 1 |
| 2 | 29-7000 | Tube 25" | 1 |
| 3 | 8-4719 | Bag (Incl. Ref. #5) | 1 |

| Ref. No. | Part No. | Description | No. Used |
|---|---|---|---|
| 4 | 22-4820 | Hanger Rod | 1 |
| 5 | 3-2781 | Bag Cord Fasteners | 1 |

# ENGINE TECUMSEH MODEL NO. TVS100-44021B

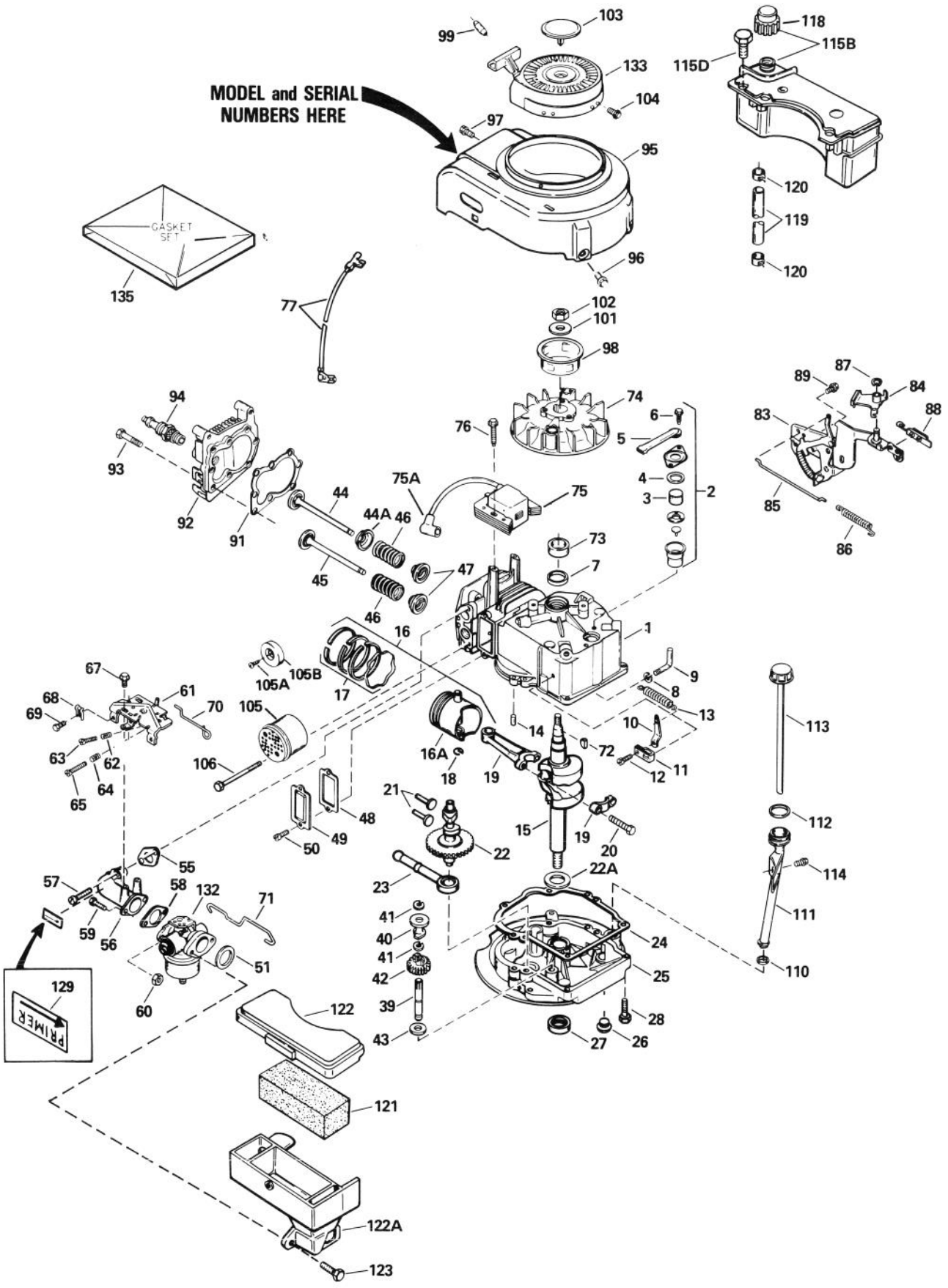

# ENGINE TECUMSEH MODEL NO. TVS100-44021B

| Ref. No. | Part No. | Description | No. Used |
|---|---|---|---|
| 1 | 35010 | Cylinder Assembly (Incl. Ref. #7 & 14) | 1 |
| 2 | 34214A | Breather Assembly (Incl. Ref. #3, 4, 5 & 6) | 1 |
| 3 | 33734 | Element — Breather | 1 |
| 4 | *33735 | Gasket — Breather | 1 |
| 5 | 33886 | Tube — Breather | 1 |
| 6 | 30200 | Screw — Hex Washer Hd. | 2 |
| 7 | 32600 | Seal — Oil | 1 |
| 8 | 28277 | Washer — Flat | 1 |
| 9 | 30589 | Rod — Governor (Incl. Ref. #8) | 1 |
| 10 | 31383A | Lever — Governor | 1 |
| 11 | 31335 | Clamp — Governor Lever | 1 |
| 12 | 650548 | Screw — Hex Washer Hd. | 1 |
| 13 | 31361 | Spring — Extension | 1 |
| 14 | 26727 | Pin — Dowel | 2 |
| 15 | 35482 | Crankshaft Assembly | 1 |
| 16 | 35544 | Piston — Pin & Ring Assy. (Std.) (Incl. Ref. #16A, 17 & 18) | 1 |
| 16 | 35545 | Piston — Pin & Ring Assembly (.010 oversize) (Incl. Ref. #16A, 17 & 18) | 1 |
| 16 | 35546 | Piston — Pin & Ring Assembly (.020 oversize) (Incl. Ref. #16A, 17 & 18) | 1 |
| 16A | 35541 | Piston & Pin Assembly (Std.) (Incl. Ref. #18) | 1 |
| 16A | 35542 | Piston & Pin Assembly (.010 oversize) (Incl. Ref. #18) | 1 |
| 16A | 35543 | Piston & Pin Assembly (.020 oversize) (Incl. Ref. #18) | 1 |
| 17 | 35547 | Ring Set — Piston (Std.) | 1 |
| 17 | 35548 | Ring Set — Piston (.010 oversize) | 1 |
| 17 | 35549 | Ring Set — Piston (.020 oversize) | 1 |
| 18 | 20381 | Ring — Piston Pin Retaining | 2 |
| 19 | 30963B | Rod Assembly — Connecting (Incl. Ref. #20) | 1 |
| 20 | 32610A | Bolt — Connecting Rod | 2 |
| 21 | 27241 | Valve — Lifter | 2 |
| 22 | 33553 | Camshaft (Mechanical Compression Release) | 1 |
| 22A | 32323 | Washer — Thrust | 1 |
| 23 | 29914 | Pump Assembly — Oil | 1 |
| 24 | *35261 | Gasket — Mounting Flange | 1 |
| 25 | 34311B | Flange — Mounting (Incl. Ref. #26, 27 & 39) | 1 |
| 26 | 27244 | Plug — Oil Drain | 1 |
| 27 | 27897 | Seal — Oil | 1 |
| 28 | 650488 | Screw — Hex Hd. | 6 |
| 39 | 30574 | Shaft — Governor | 1 |
| 40 | 30588A | Spool — Governor | 1 |
| 41 | 29193 | Ring — Retaining | 1 |
| 42 | 30591 | Gear Assembly — Governor (Incl. Ref. #43) | 1 |
| 43 | 35479 | Washer — Flat | 1 |
| 44 | 29314B | Valve — Intake (Std.) (Incl. Ref. #47) | 1 |
| 44 | 29315C | Valve — Intake (1/32" oversize) (Incl. Ref. #47) | 1 |
| 44A | 35390 | Seal Assy. — Intake Valve | 1 |
| 45 | 29313C | Valve — Exhaust (Std.) (Incl. Ref. #47) | 1 |
| 45 | 29315C | Valve — Exhaust (1/32" oversize) (Incl. Ref. #47) | 1 |
| 46 | 31672 | Spring — Valve | 2 |
| 47 | 31673 | Cap — Lower Valve Spring | 2 |
| 48 | *27234A | Gasket — Valve Spring Box | 1 |
| 49 | 32755 | Cover — Valve Spring Box | 1 |
| 50 | 650128 | Screw — Hex Hd. | 2 |
| 51 | *34338 | Gasket — Air Cleaner | 1 |
| 55 | *34690A | Gasket — Intake Pipe | 1 |
| 56 | 31384A | Pipe — Intake (Incl. Ref. #55) | 1 |
| 57 | 650451 | Screw — Hex Hd. | 2 |
| 58 | *26756 | Gasket — Carburetor | 1 |
| 59 | 6201 | Screw — Hex Hd. | 2 |
| 60 | 29752 | Nut — Whiz Lock | 2 |
| 61 | 33131A | Bracket Assembly — Control (Incl. Ref. #62-65) | 1 |
| 62 | 33802 | Spring — Compression | 1 |
| 63 | 650777 | Screw — Fil. Hd. | 1 |
| 64 | 31342 | Spring — Compression | 1 |
| 65 | 650549 | Screw — Fil. Hd. | 1 |
| 67 | 30200 | Screw — Hex Washer Hd. | 2 |
| 68 | 27793 | Clip — Conduit | 1 |
| 69 | 28942 | Screw — Hex Washer Hd. | 1 |
| 70 | 34337 | Link — Governor Spring | 1 |
| 71 | 34336 | Link — Throttle | 1 |
| 72 | 611004 | Key — Flywheel | 1 |
| 73 | 34080 | Spacer — Flywheel Key | 1 |
| 74 | 611112 | Flywheel | 1 |
| 75 | 34443A | Solid State Assembly | 1 |
| 75A | 610118 | Cover — Spark Plug | 1 |
| 76 | 650814 | Screw — Torx Hex Washer Hd. | 2 |
| 77 | 34961 | Wire — Ground | 1 |
| 83 | 35015A | Bracket — S.E. Brake | 1 |
| 84 | 34968 | Lever — Brake | 1 |
| 85 | 34966 | Link — Control | 1 |
| 86 | 34965 | Spring — Extension | 1 |
| 87 | 32309 | Ring — Retaining | 1 |
| 88 | 610973 | Terminal Assembly | 1 |
| 89 | 650839 | Screw — Hex Washer Hd. | 2 |
| 91 | *33015A | Gasket — Cylinder Head | 1 |
| 92 | 34342 | Head — Cylinder | 1 |
| 93 | 6021A | Screw — Hex Flange Hd. | 8 |
| 94 | 35395 | Spark Plug — Resistor (Champion RJ-19LM or equivalent) | 1 |

* Indicates parts included in Gasket Set, Ref. #135.
* Indicates optional parts.

# ENGINE TECUMSEH MODEL NO. TVS100-44021B (Continued)

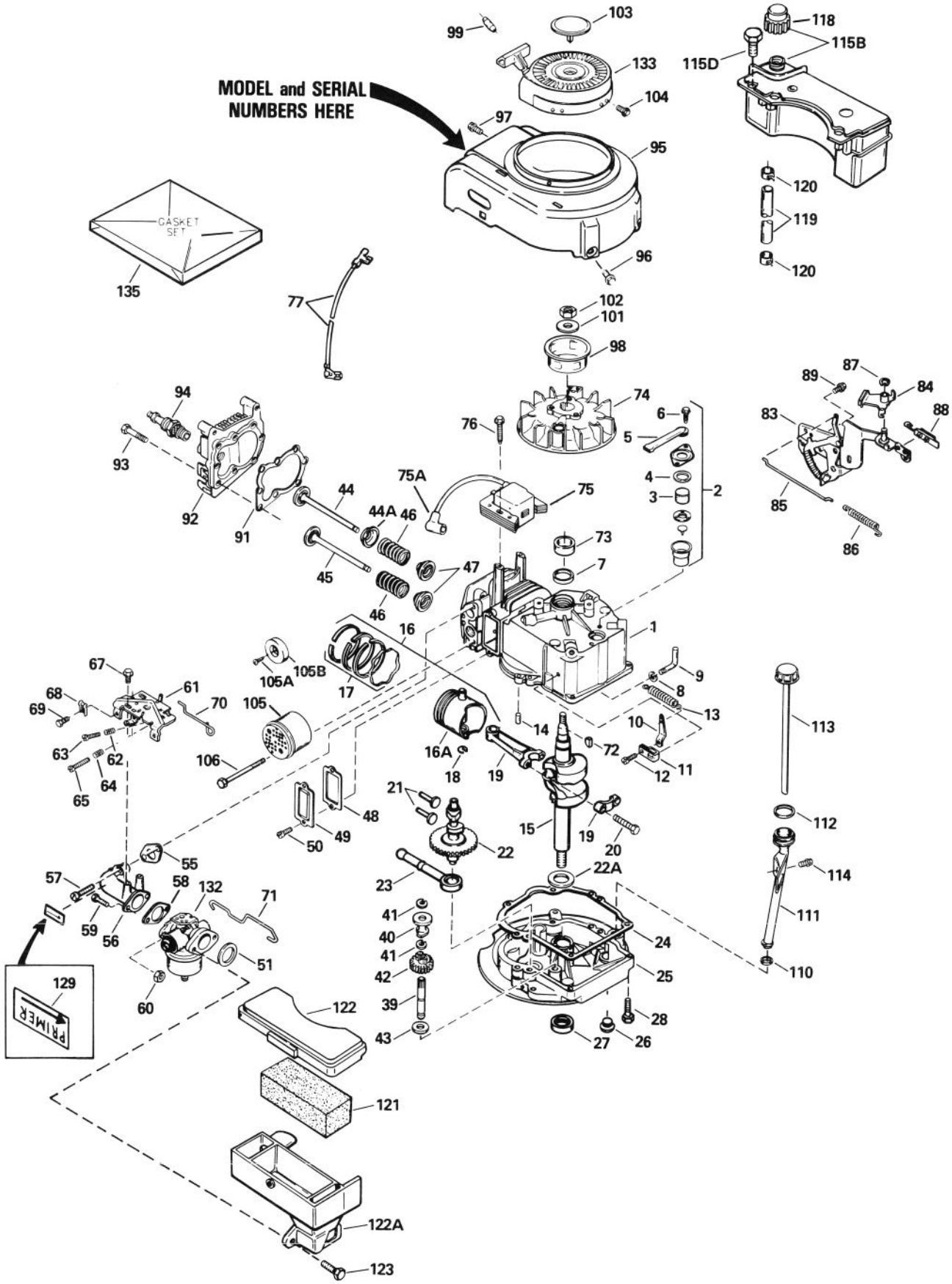

# ENGINE TECUMSEH MODEL NO. TVS100-44021B (Continued)

| Ref. No. | Part No. | Description | No. Used |
|---|---|---|---|
| 95 | 35484 | Housing — Blower | 1 |
| 96 | 650831 | Screw — Hex Washer Hd. | 2 |
| 97 | 30200 | Screw — Hex Washer Hd. | 2 |
| 98 | 35000 | Hub — Starter | 1 |
| 99 | 34985 | Retainer — Starter Roper (ECV) | 1 |
| 101 | 650815 | Washer — Belleville | 1 |
| 102 | 650816 | Nut — Flywheel | 1 |
| 103 | 35392 | Plug — Starter | 1 |
| 104 | 650884 | Screw — Hex Washer Hd. | 4 |
| 105 | 35708 | Muffler Assembly (Incl. Ref. #106) | 1 |
| 105A | 32431 | Cover — Muffler | 1 |
| 105B | 650760 | Screw — Pan Hd. | 1 |
| 106 | 650795 | Screw — Hex Hd. | 2 |
| 110 | 34265 | Gasket — Fill Tube | 1 |
| 111 | 35577 | Tube — Oil Fill | 1 |
| 112 | 35499 | "O" Ring | 1 |
| 113 | 35578 | Dipstick — Oil Fill | 1 |
| 114 | 650562 | Screw — Hex Washer Hd. | 1 |
| 115B | 34476 | Tank Assembly (Incl. Ref. #118 & 120) | 1 |
| 115D | 28763 | Screw — Hex Washer Hd. | 3 |
| 118 | 33032 | Cap — Fuel | 1 |
| 119 | 30705 | Line — Fuel | 1 |
| 120 | 26460 | Clamp — Fuel Line | 1 |
| 121 | 34340 | Filter — Air Cleaner | 1 |
| 122 | 34341A | Cover — Air Cleaner | 1 |
| 122A | 34858 | Body — Air Cleaner | 1 |
| 123 | 650806 | Screw — Hex Washer Hd. | 2 |
| 129 | 34144 | Decal — Instruction | 1 |
| 132 | 632098 | Carburetor (Incl. Ref. #58) | 1 |
| 133 | 590621 | Starter — Rewind | 1 |
| 135 | 33238D | Gasket Set (Incl. Items Marked *) | 1 |

* Indicates parts included in Gasket Set, Ref. #135.
* Indicates optional parts.

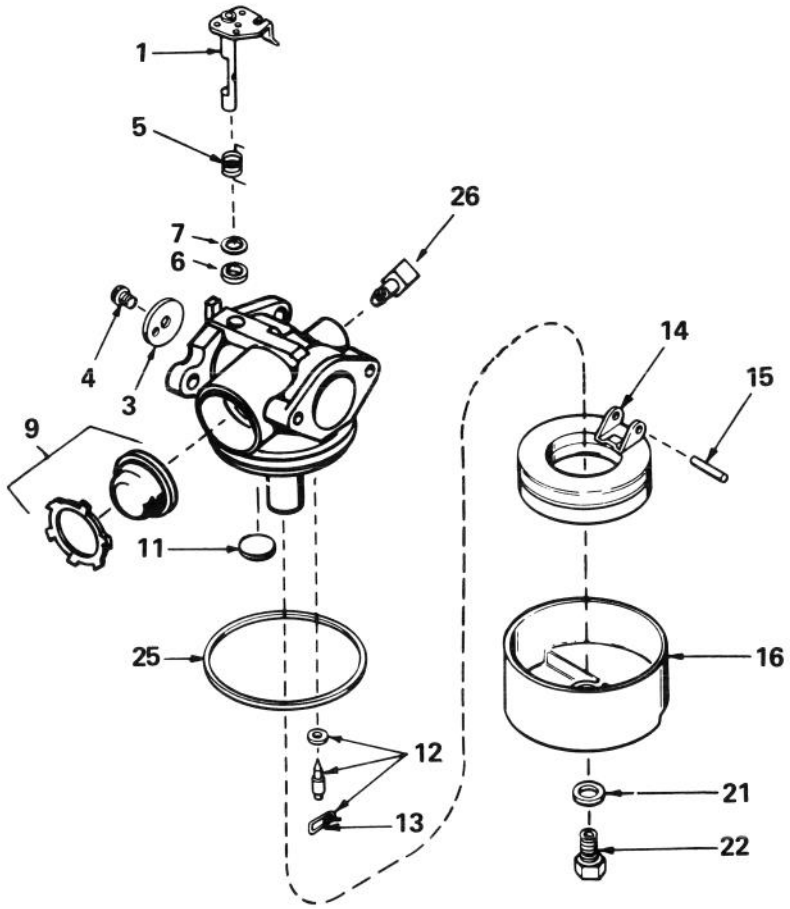


# CARBURETOR NO. 632098

| Ref. No. | Part No. | Description | No. Used |
|---|---|---|---|
| 1 | 631615 | Shaft & Lever Assy. — Throttle | 1 |
| 3 | 631616 | Shutter — Throttle | 1 |
| 4 | 650506 | Screw — Throttle Shutter | 1 |
| 5 | 631767 | Spring — Throttle Return | 1 |
| 6 | 631971 | Seal — Dust | 1 |
| 7 | 631184 | Washer — Flat | 1 |
| 9 | 632047 | Primer Assembly | 1 |
| 11 | 631027 | Plug — Welch | 1 |
| 12 | 631021 | Inlet Needle — Seat & Clip Assy. (Incl. Ref. #13) | 1 |

| Ref. No. | Part No. | Description | No. Used |
|---|---|---|---|
| 13 | 631022 | Clip — Inlet Needle | 1 |
| 14 | 632019 | Float — Carburetor | 1 |
| 15 | 631024 | Shaft — Float | 1 |
| 16 | 631700 | Bowl — Float | 1 |
| 21 | 631334 | Gasket — Bowl-To-Body | 1 |
| 22 | 631937 | Nut — Float Bowl | 1 |
| 25 | 631028 | Gasket — Bowl-To-Body | 1 |
| 26 | 631807 | Fitting — Fuel Inlet | 1 |

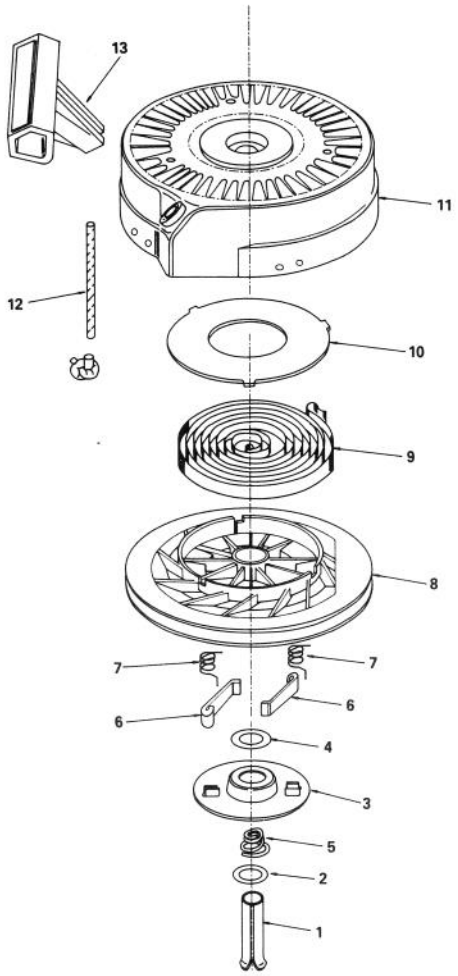


# REWIND STARTER NO. 590621

| Ref. No. | Part No. | Description | No. Used |
|---|---|---|---|
| 1 | 590599A | Pin — Spring (Incl. Ref. #4) | 1 |
| 2 | 590600 | Washer | 1 |
| 3 | 590615 | Retainer | 1 |
| 4 | 590601 | Washer | 1 |
| 5 | 590598 | Spring — Brake | 1 |
| 6 | 590616 | Dog — Starter | 2 |
| 7 | 590617 | Spring — Dog | 2 |

| Ref. No. | Part No. | Description | No. Used |
|---|---|---|---|
| 8 | 590618 | Pulley | 1 |
| 9 | 590619 | Spring — Rewind | 1 |
| 10 | 590620 | Cover — Spring | 1 |
| 11 | 590622 | Housing Assembly — Starter | 1 |
| 12 | 590535 | Rope — Starter (Length 98" & 9/64" dia.) | 1 |
| 13 | 590452 | Handle — Starter | 1 |

# PRODUCT CHANGES

In an effort to make improvements available to TORO owners as quickly as possible, minor changes are incorporated into Toro's products from time to time that do not become immediately shown in the Parts Catalog. If such a change apparently has been made in your unit, which is not reflected in your manual, see your TORO Distributor or his Authorized TORO Service Dealer for information and part numbers.

# IDENTIFICATION AND ORDERING

### MODEL AND SERIAL NUMBERS

The Mower has two identification numbers: a model number and a serial number. The two numbers are stamped on a decal which is located on the mower housing between the rear wheels. In any correspondence concerning the mower, supply model and serial numbers to assure that correct information and replacement parts are obtained.

To order replacement parts from an Authorized TORO Service Dealer, supply the following information:

1. Model and serial numbers of the mower.
2. Part number, description, and quantity of part(s) desired.

**Note:** Do not order by reference number if a parts catalog is being used; use the PART NUMBER.

# The Toro Promise

***A Two Year Limited Warranty***

*On All*

*Gasoline Powered Consumer Products*

*The Toro Company promises to repair your TORO Product if defective in materials or workmanship. The following time periods from the date of purchase apply:*

Residential Product ..... 2 Years
Residential Products Used Commercially ..... 45 Days

*The costs of parts and labor are included, but the customer pays the transportation costs. Just return any residential product to an Authorized TORO Service Dealer or TORO Distributor.*

Should you feel your TORO Product is defective and wish to rely on The Toro Promise, the following procedure is recommended:

1. Contact any Authorized TORO Service Dealer, TORO Master Service Dealer, or TORO Distributor (the Yellow Pages of your telephone directory is a good reference source).
2. He will either instruct you to return the product to him or recommend another Authorized TORO Service outlet which might be more convenient.
3. Bring the product along with your original sales slip, or other evidence of purchase date, to the service dealer.
4. The servicing dealer will inspect the unit, advise you whether the product is defective and, if so, make all repairs necessary to correct the defect without extra charge to you.

If for any reason you are dissatisfied with the dealer's analysis of the defect or the service performed, you may contact us.

Write:

TORO Consumer Service Department
8111 Lyndale Avenue South
Minneapolis, Minnesota 55420

The above remedy of product defects through repair by an Authorized TORO Service Dealer is the purchaser's sole remedy for any defect.

THERE IS NO OTHER EXPRESS WARRANTY. ALL IMPLIED WARRANTIES OF MERCHANTABILITY AND FITNESS FOR USE ARE LIMITED TO THE DURATION OF THE EXPRESS WARRANTY.

Some states do not allow limitations on how long an implied warranty lasts, so the above limitation may not apply to you.

This warranty applies only to parts or components which are defective and does not cover repairs necessary due to normal wear, misuse, accidents, or lack of proper maintenance. Regular, routine maintenance of the unit to keep it in proper operating condition is the responsibility of the owner.

All warranty repairs reimbursable under The Toro Promise must be performed by an Authorized TORO Service Dealer using Toro approved replacement parts.

Repairs or attempted repairs by anyone other than an Authorized TORO Service Account are not reimbursable under The Toro Promise. In addition, these unauthorized repair attempts may result in additional malfunctions, the correction of which is not covered by warranty.

THE TORO COMPANY IS NOT LIABLE FOR INDIRECT, INCIDENTAL OR CONSEQUENTIAL DAMAGES IN CONNECTION WITH THE USE OF THE PRODUCT INCLUDING ANY COST OR EXPENSE OF PROVIDING SUBSTITUTE EQUIPMENT OR SERVICE DURING PERIODS OF MALFUNCTION OR NON-USE.

Some states do not allow the exclusion or limitation of incidental or consequential damages, so the above limitation or exclusion may not apply to you.

This warranty gives you specific legal rights, and you may also have other rights which vary from state to state.

## COUNTRIES OTHER THAN THE UNITED STATES OR CANADA

Customers who have purchased TORO products exported from the United States or Canada should contact their TORO Distributor (Dealer) to obtain guarantee policies for your country, province or state. If for any reason you are dissatisfied with your Distributor's service or have difficulty obtaining guarantee information, contact the TORO importer. If all other remedies fail, you may contact us at The Toro Company.

Compliance with Radio Interference Regulations Certified.
Certifie Conforme au Reglement sur le Brouillage Radioelectrique.

# MAINTENANCE RECORD

| Date | Hours Used | Oil Change | Air Cleaner Service | Lubrication | Sharpen Blade | Winter Storage | Spring Service | Spark Plug Gap |
|---|---|---|---|---|---|---|---|---|
| | | | | | | | | |
| | | | | | | | | |
| | | | | | | | | |

# MAINTENANCE RECORD

| Date | Hours Used | Oil Change | Air Cleaner Service | Lubrication | Sharpen Blade | Winter Storage | Spring Service | Spark Plug Gap |
|---|---|---|---|---|---|---|---|---|
| | | | | | | | | |
| | | | | | | | | |
| | | | | | | | | |
| | | | | | | | | |
| | | | | | | | | |
| | | | | | | | | |
| | | | | | | | | |
| | | | | | | | | |
| | | | | | | | | |
| | | | | | | | | |
| | | | | | | | | |
| | | | | | | | | |
| | | | | | | | | |
| | | | | | | | | |
| | | | | | | | | |
| | | | | | | | | |
| | | | | | | | | |
| | | | | | | | | |
| | | | | | | | | |
| | | | | | | | | |
| | | | | | | | | |
| | | | | | | | | |
| | | | | | | | | |
| | | | | | | | | |
| | | | | | | | | |
| | | | | | | | | |
| | | | | | | | | |
| | | | | | | | | |
| | | | | | | | | |