Form Number 3355-547 Rev A

Ultra 225 Blower/Vacuum

Model No. 51598 - 250000001 and up.

Parts Catalog

Ordering Replacement Parts

To order replacement parts, please supply the part number, the quantity, and the description of each part desired.

Understanding Reference Numbers

Each Identified part in an illustration has a reference number. The reference number for a part also appears in the parts list, along with other information about the part.

This catalog uses two special reference number formats, one to indicate parts in a service assembly and another to indicate the quantity of a given part in an illustration.

Service Assembly Reference Numbers

Parts in service assemblies have reference numbers in the form a:b. The a represents the reference number of the entire service assembly and the b represents a sequential number unique to each part within the service assembly.

For example, a wheel assembly might be identified by reference number 6, the tire by 6:1, the valve by 6:2, and the wheel by 6:3. When you order the assembly identified by reference number 6, you receive all parts identified by reference numbers 6:1, 6:2, and 6:3. However, you may also order any part individually. Reference numbers of this type appear in illustrations and in part lists.

Reference Numbers Indicating Quantity

In an illustration, if a reference number indicates more than one part, the reference number has the form nX y. The n represents the quantity of the part, the X is the multiplication symbol, and the y represents the reference number.

For example, in an illustration, the reference number 2X 37 means that two of the parts identified by reference number 37 are indicated.

© The Toro Company - 2006
All Rights Reserved

Register your product at www.Toro.com

Contents

Description	Page	Description	Page
Blower/Vacuum Assembly	 3	Attachments and Accessories List	 5
Vacuum Tube and Bag Assembly	 4		

Part Description Abbreviations

Part descriptions in this catalog may include the following abbreviations.

AR. . . . . as required
ASM. . . . . assembly
BBC. . . . . blade brake clutch
CARR. . . . . carriage
DEG. . . . . degrees
EXT. . . . . external
FH. . . . . flat head
GA. . . . . gauge
HF. . . . . hex flange
HH. . . . . hex head
HHF. . . . . hex head flange
HHFTF. . . . . hex head flange thread forming
HJ. . . . . hex jam
HLH. . . . . hex lag head
HOC. . . . . height-of-cut
HSBH. . . . . hex socket button head
HSFH. . . . . hex socket flat head
HSH. . . . . hex socket head
HWH. . . . . hex washer head
HWHTF. . . . . hex washer head thread forming
HYD. . . . . hydraulic
INC. . . . . incorporated
LH. . . . . left hand
NI. . . . . nylon insert
NPTF. . . . . national pipe thread fine
PFH. . . . . phillips flat head
PPH. . . . . phillips pan head
PPHTF. . . . . phillips pan head thread forming
PRH. . . . . phillips round head
PTH. . . . . phillips truss head
PTO. . . . . power-take-off
RH. . . . . right hand
ROPS. . . . . roll-over-protection-system
SFH. . . . . slotted fillister head
SHH. . . . . slotted hex head
SHWH. . . . . slotted hex washer head
SPH. . . . . slotted pan head
SQH. . . . . square head
SRH. . . . . slotted round head
STD. . . . . standard
TAP. . . . . self tapping
TTH. . . . . torx truss head

Footnotes

❶ Not serviced separately

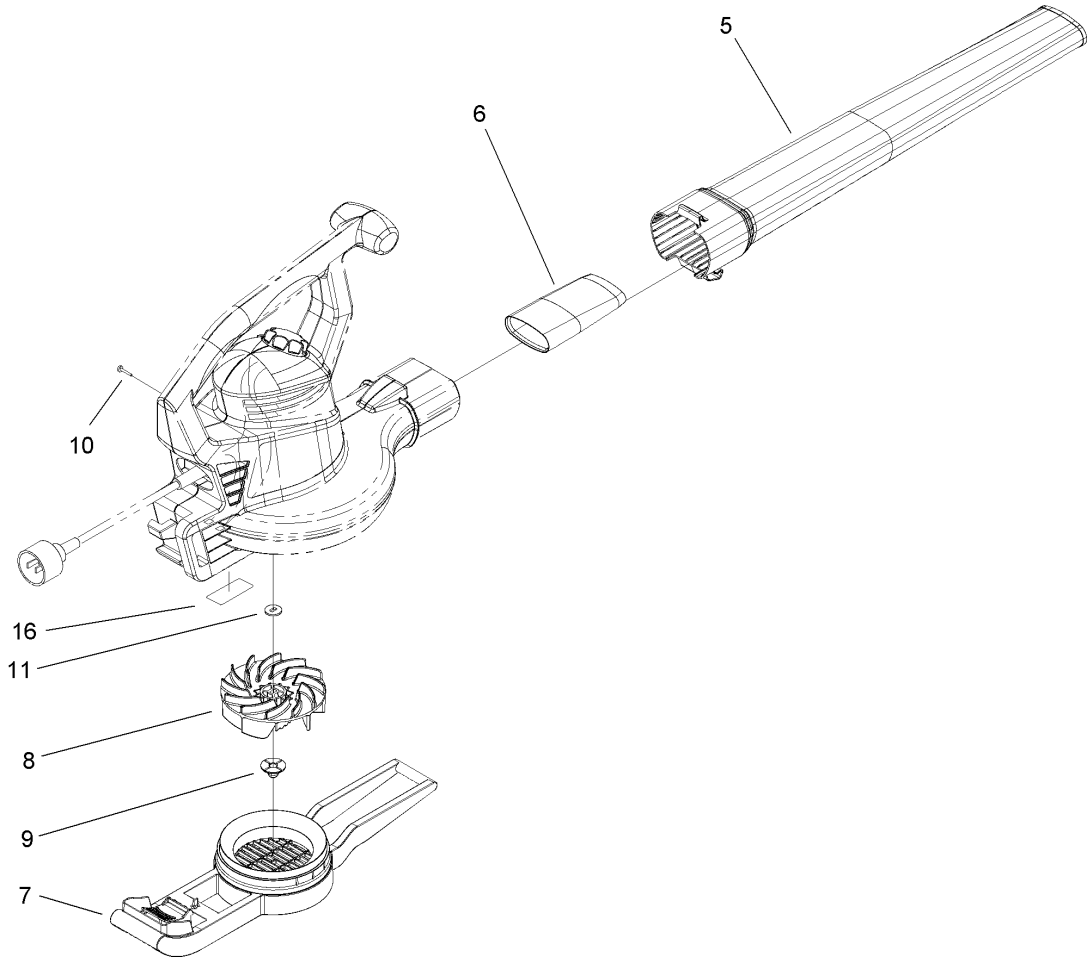

Blower/Vacuum Assembly

Ref	Part No.	Qty.	Description
5	100-9072	1	Tube-Blower
6	100-9069	1	Tube-Insert
7	107-9989	1	Cover-Inlet
8	100-9076	1	Impeller-Magnesium
9	73-5380	1	Nut-Hex
10	94-4496	10	Screw-PPH
11	93-0585	1	Washer
16	110-3108	1	Decal-Caution

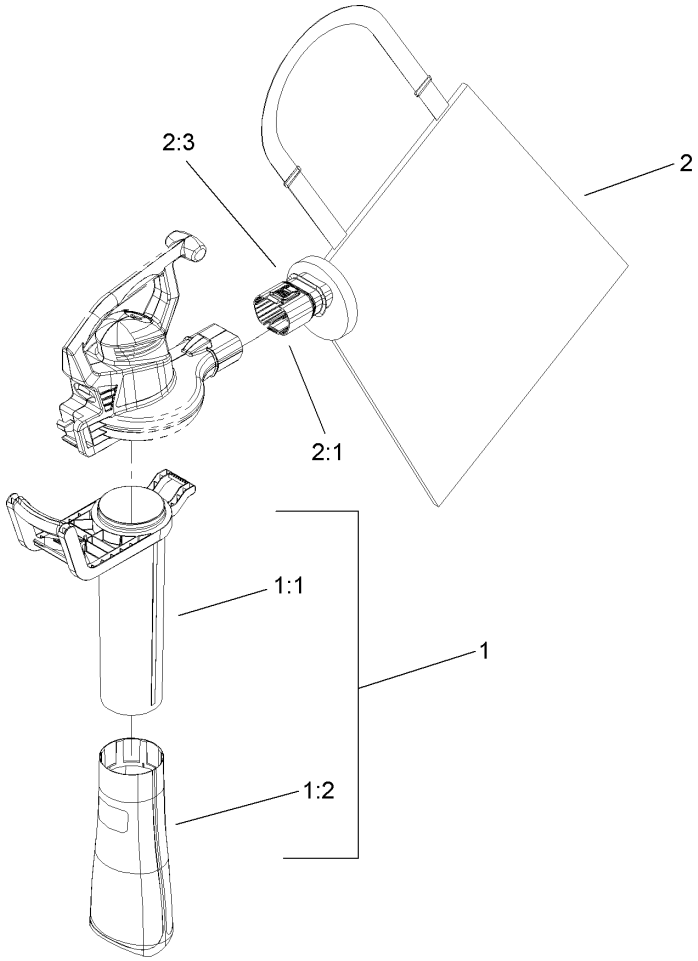

Vacuum Tube and Bag Assembly

Ref	Part No.	Qty.	Description
❶1		1	Vac Tube ASM
1:1	100-9066	1	Tube-Vac, Upper
1:2	100-9074	1	Tube-Vac, Lower
2	104-3809	1	Bag ASM
2:1	100-9065	1	Collar-Bag
2:3	100-9064	1	Tie-Cable

Attachments and Accessories

For 51598 - Ultra 225 Blower/Vacuum

Product Name	Model/Part
Blower/Vacuum Replacement Bag	51601

NOTES

NOTES


TORO®