FORM NO. 3314-109

TORO

MODEL NO. 26620B-0900001 & UP
MODEL NO. 26620BG-0900001 & UP

PARTS CATALOG

53cm REAR BAGGER

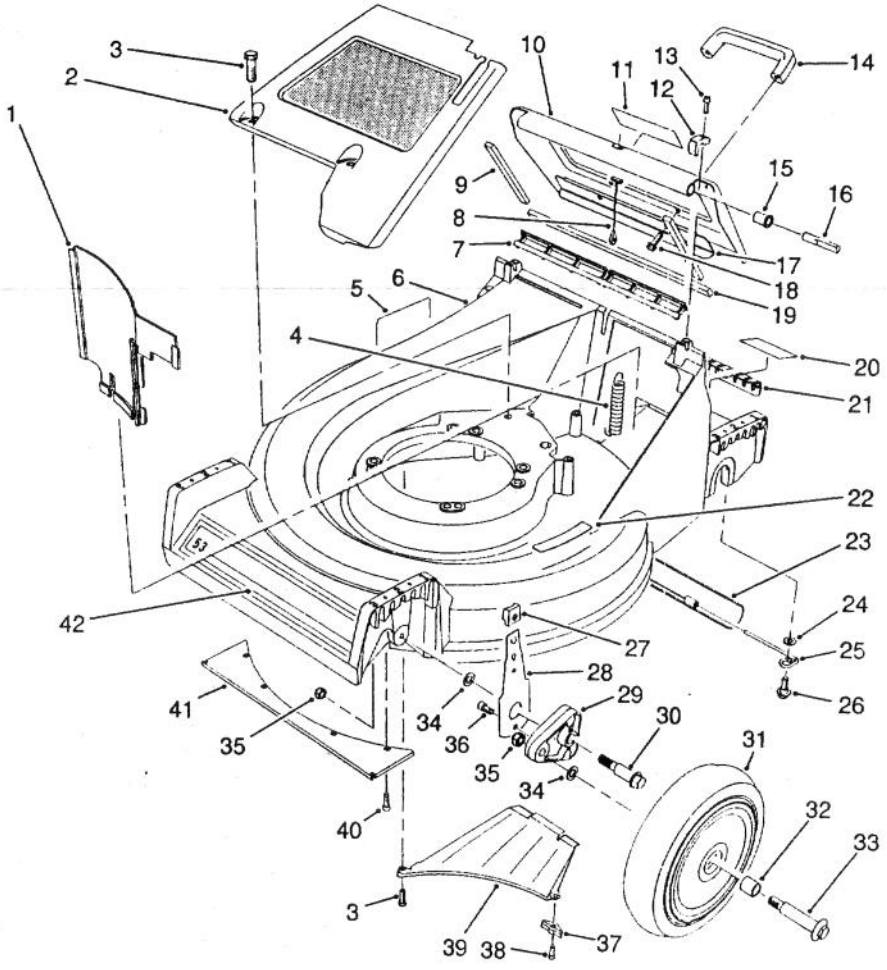

C-0491

HOUSING ASSEMBLY

Ref. No.	Part No.	Description	No. Used
1	66-0020	Panel - Vertical	1
2	65-5660	Panel - Screen	1
3	32144-70	Screw - Cap Hex. Hd.	3
4	65-5360	Spring - Extension	1
5	62-3860	Decal - Danger	1
6	13-5869	Housing - 53cm (Incl. Ref. #5 & 22)	1
7	65-5160	Seal - Door	1
8	65-5370	Cable - Door	1
9	65-5480	Seal - Door Side	2
10	13-5889	Door - Discharge (Incl. Ref. #9, 11 & 19)	1
11	71-8370	Decal - Danger	1
12	65-5140	Clamp - Hinge	2
13	65-5210	Screw - Hex. Socket Hd.	2
14	65-5100	Handle - Door	1
15	65-5460	Bushing - Door	2
16	65-5290	Pin - Hinge	2
17	66-0610	Brace - Door	1
18	46-8091	Screw - Handle	2
19	65-5490	Seal - Door (End)	1
20	40-2440	Decal - Maintenence (Model 26620BG Only)	1
21	65-5150	Cover - Access	1
22	62-3950	Decal - Step Pad	1
23	65-5350	Shield - Trailing	1
24	3256-23	Washer - Flat	2
25	76-1980	Hanger - Shield	2
26	5-2490	Screw - Shoulder	2
27	25-7740	Knob - Spring Arm	2
28	66-0540	Arm - Front Spring	2
29	66-0580	Arm - Front Pivot	2
30	66-0560	Screw - Shoulder	2

©The TORO Company - 1989

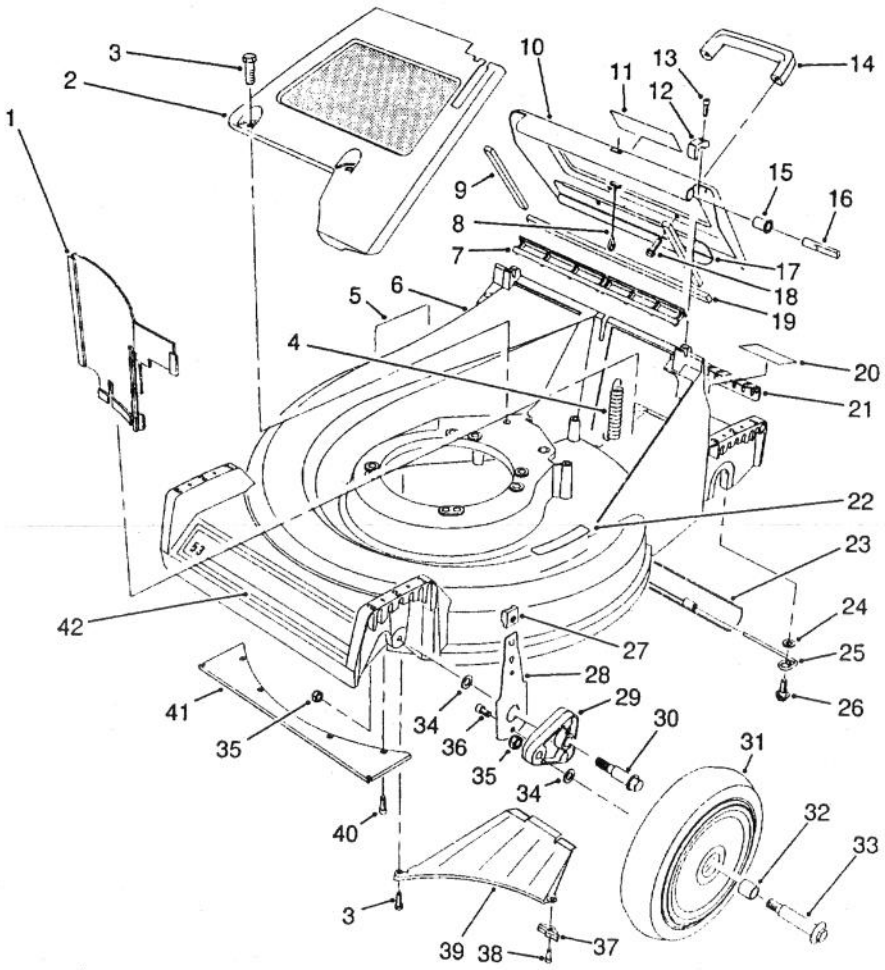

C-0491

HOUSING ASSEMBLY (Continued)

Ref. No.	Part No.	Description	No. Used
31	11-9509	Wheel & Tire Assembly (Incl. Ref. #32)	2
32	27-6250	Bushing - Wheel	4
33	27-6231	Bolt - Wheel	2
34	40-1940	Washer - Wheel	4
35	52-3620	Nut - Lock	4
36	65-5220	Screw - Cap Socket Hd.	2
37	66-0640	Bracket - Discharge	1

Ref. No.	Part No.	Description	No. Used
38	65-5221	Screw - Bracket	1
39	65-5010	Ramp - Discharge	1
40	32144-4	Screw - Self Tapping (Model 26620BG Only)	4
41	70-7030	Guard - Front (Model 26620BG Only)	1
42	70-7590	Decal - 53cm	1

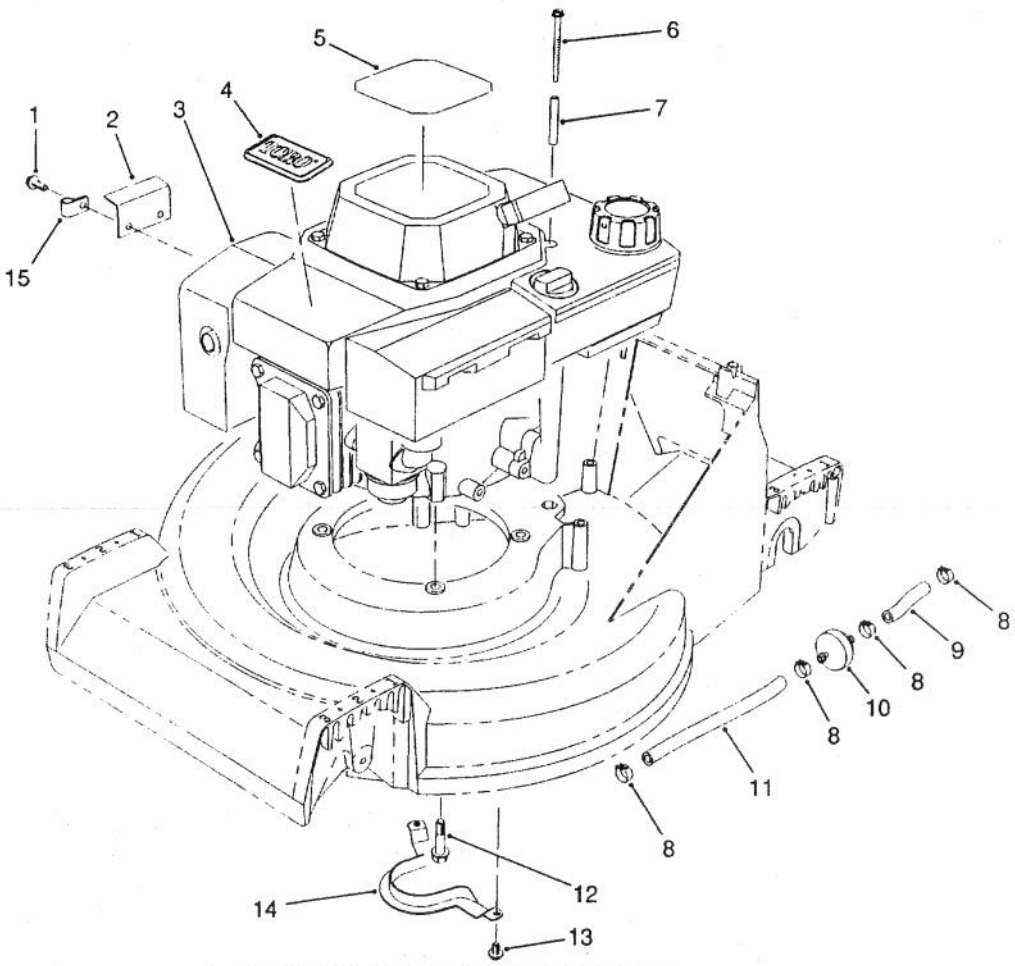

ENGINE ASSEMBLY

Ref. No.	Part No.	Description	No. Used
1	46-0790	Screw - Thread Forming (Model 26620B-0900101 thru 0903406, Model 26620BG-0900101 thru 0901241)	2
2	55-7890	Shield - Flywheel (Model 26620B-0900101 thru 0903406, Model 26620BG-0900101 thru 0901241)	1
3	72-4140	Engine - OHV (Model 26620B-0900101 thru 0902961, Model 26620BG-0900101 thru 0901241)	1
*	62-5440	Engine - OHV (Model 26620B-0902962 thru 0903406)	1
*	81-5920	Engine - OHV (Model 26620B-0903407 & Up, Model 26620BG-0901242 & Up)	1
4	46-8290	Plate - TORO Logo	1
5	57-3120	Decal - Recoil (Model 26620B Only)	1
*	55-8070	Decal - Recoil (Model 26620BG Only)	1
6	56-6610	Screw - Thread Forming	2
7	57-3830	Spacer - Tubular	2
8	2412-95	Clamp - Fuel Line	4
9	51-3211	Line - Fuel	1
10	56-6360	Filter - Fuel	1
11	51-3214	Line - Fuel	1
12	11-0590	Screw - Cap Hex. Hd.	3
13	32144-70	Screw - Cap Hex. Hd.	2
14	66-0570	Guide - Belt	1
15	2412-89	Clamp - R (Model 26620B-0900101 thru 0903406, Model 26620BG-0900101 thru 0901241)	1
*	75-9850	Tube - Oil Drain	1
*	66-1970	Wrench - Oil Drain	1
*	66-1971	Pin - Oil Drain Wrench	1
*	62-6770	Wrench	1
*	46-9620	Wrench - Spark Plug	1
*	46-9621	Pin - Spark Plug Wrench	1

*Not Illustrated

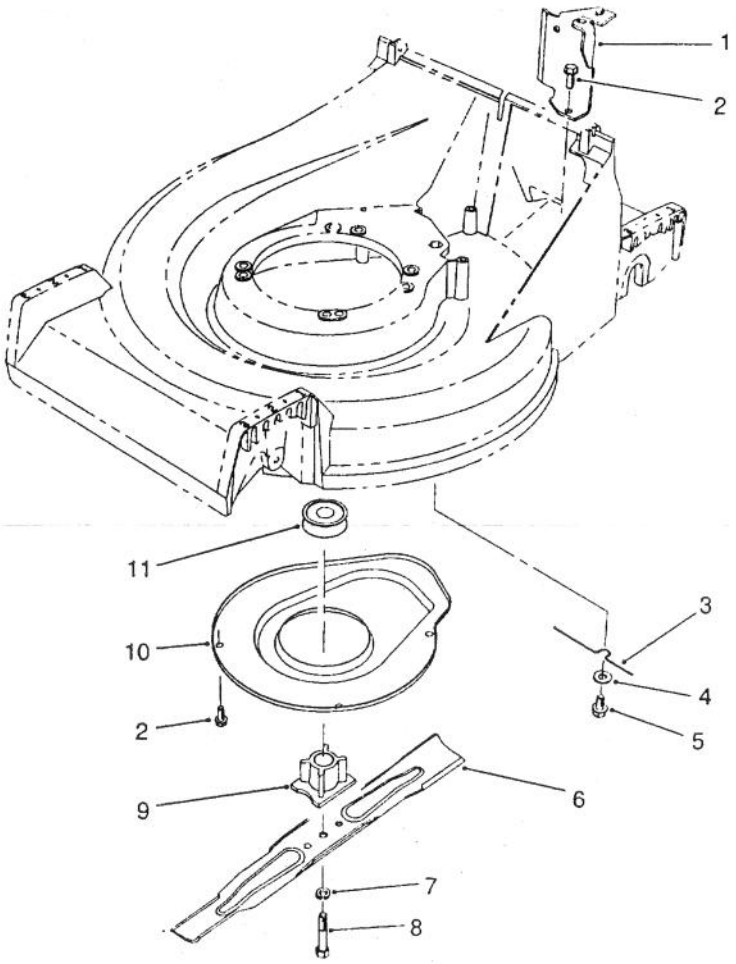

C-0172

BLADE ASSEMBLY

Ref. No.	Part No.	Description	No. Used
1	66-0030	Bracket - Cable Support	1
2	32144-70	Screw - Cap Hex. Hd.	5
3	66-0620	Retainer - Belt	1
4	3256-24	Washer - Flat	1
5	32144-15	Screw - Hex. Flange Hd.	1
6	62-7700	Blade - 21"	1

Ref. No.	Part No.	Description	No. Used
7	3253-22	Washer - Blade	1
8	26-0670	Bolt - Blade	1
9	62-7540	Retainer - Blade	1
10	65-5200	Cover	1
11	62-7550	Pulley - Engine	1

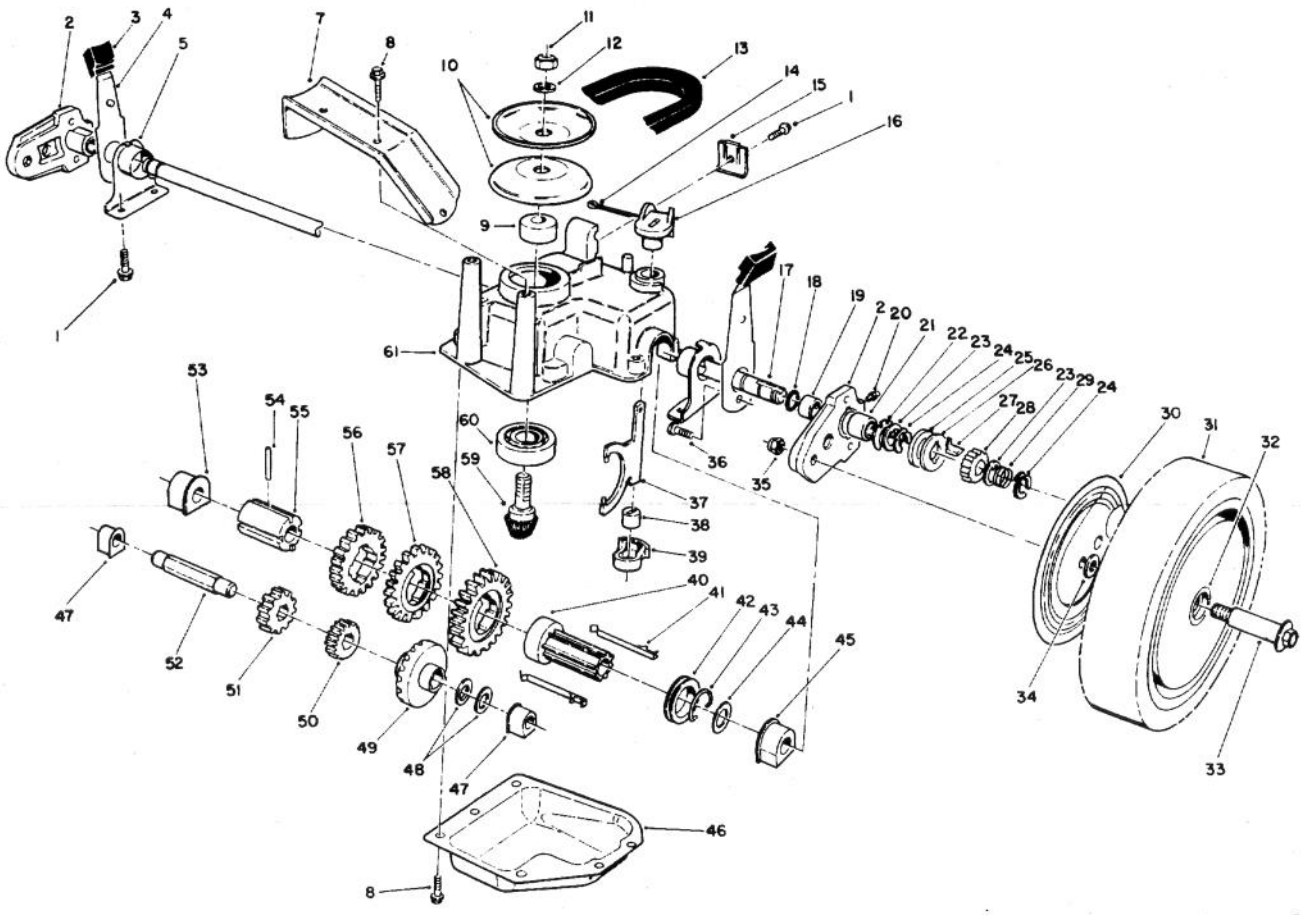

C-0152

GEAR CASE ASSEMBLY
(For Model 26620B-0900101 thru 0900861, Model 26620BG-09000101 thru 090121)

Ref. No.	Part No.	Description	No. Used
1	32144-70	Screw - Hex. Washer Hd.	5
2	65-5040	Pivot Arm Assembly (Incl. Ref. #19-21)	2
3	25-7740	Knob - Arm	2
4	65-5440	Spring Arm Assembly	2
5	66-0360	Cap - End	2
7	65-5190	Bracket - Belt Guide	1
8	49-2040	Screw - Self Tapping	8
9	62-6660	Spacer	1
10	60-8840	Pulley - Half	2
11	3296-5	Nut - Lock	1
12	3256-24	Washer - Flat	1
13	66-0210	V-Belt	1
14	3272-5	Pin - Cotter	1
15	66-0240	Clamp - Cable	1
16	74-3740	Lever - Shift	1
17	65-4770	Shaft - Output	1
18	237-153	Seal - O-Ring	2
19	47-2900	Bushing - Sleeve	2
20	302-56	Fitting - Grease	2
21	48-2060	Bearing -Needle	2

Ref. No.	Part No.	Description	No. Used
22	65-4730	Washer - Thrust (Inner)	2
23	65-4740	Washer - Thrust (Keyed)	4
24	65-2720	Ring - Retaining	4
25	65-4710	Ring - Friction	2
26	65-4760	Washer -Clutch	2
27	66-6050	Key - Rocking (L.H.)	1
*	66-6040	Key - Rocking (R.H.)	1
28	65-4750	Pinion	2
29	65-4720	Spring - Compression	2
30	63-5270	Cover - Wheel	2
31	11-9519	Wheel Tire & Gear Assy. (Incl. Ref. #32)	2
32	27-6250	Bushing - Wheel	4
33	27-6231	Bolt - Wheel	2
34	40-1940	Washer - Wheel Bolt	4
35	52-3620	Nut - Lock	2
36	65-5220	Screw - Cap Socket Hd.	2
37	60-8870	Yoke - Shift	1
38	29-9570	Bushing - Yoke	1
39	60-8810	Retainer - Shift Fork	1
40	60-8780	Sleeve - Shift Key	1

*Not Illustrated

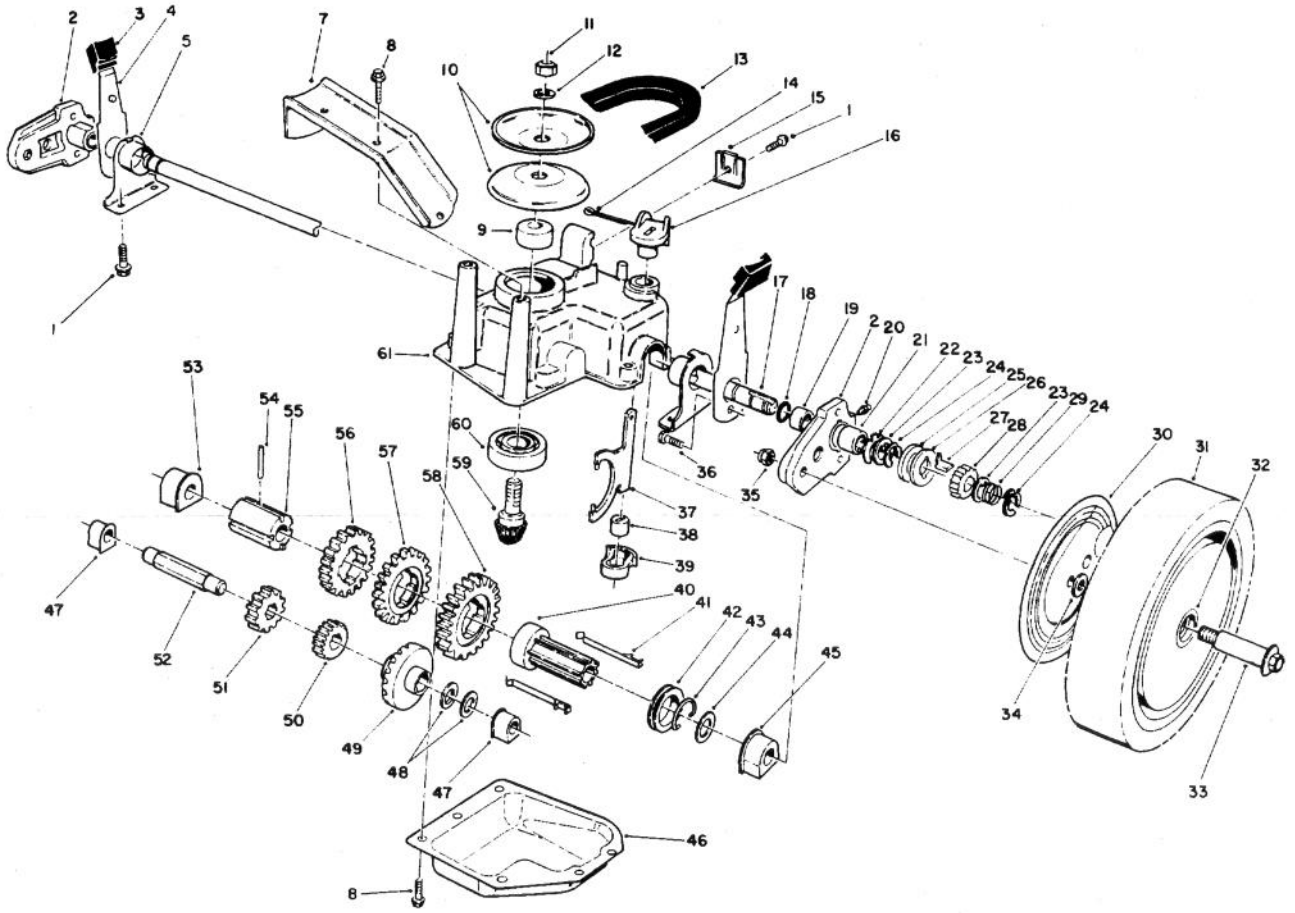

C-0152

GEAR CASE ASSEMBLY (Continued)
(For Model 26620B-0900101 thru 0900861, Model 26620BG-09000101 thru 090121)

Ref. No.	Part No.	Description	No. Used
41	65-5230	Key - Shift	2
42	60-8760	Collar - Shift	1
43	65-5250	Clip - Spring	1
44	36-4780	Washer - Thrust	1
45	60-8770	Bushing - Output Shaft	1
46	60-8730	Cover - Gear Case	1
47	60-8750	Bushing - Intrmdt. Shaft	2
48	36-4791	Washer - Thrust	2
49	55-3760	Gear - Pinion 15T	1
50	55-3780	Gear - Pinion 20T	1
51	55-3800	Gear - Pinion 25T	1

Ref. No.	Part No.	Description	No. Used
52	60-8800	Shaft - Intermediate	1
53	60-8850	Bushing - Output Shaft	1
54	32121-120	Pin - Coil	1
55	60-8790	Sleeve - Gear	1
56	55-3810	Gear - 39T (3rd Gear)	1
57	55-3790	Gear - 44T (2nd Gear)	1
58	55-3770	Gear - 49T (1st Gear)	1
59	60-8890	Pinion - Bevel	1
60	38-7820	Bearing - Ball	1
61	60-8710	Case - Gear (Upper)	1
*	62-6672	Gear Case Assy. Complete	1

*Not Illustrated

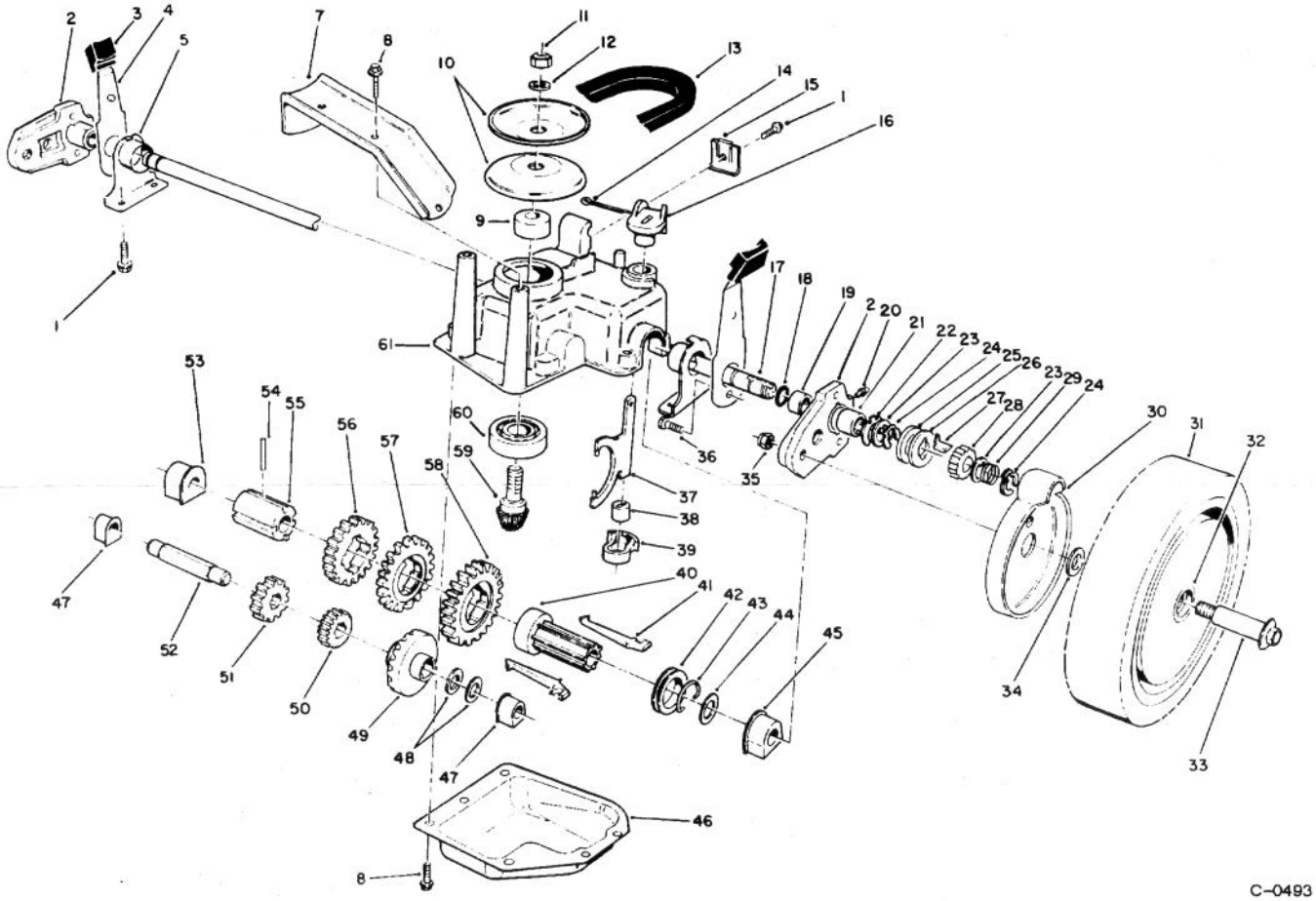

GEAR CASE ASSEMBLY
(Model 26620B–0900862 & Up, Model 26620BG–0901242 & Up)

Ref. No.	Part No.	Description	No. Used
1	32144-70	Screw – Hex. Washer Hd.	5
2	65-5040	Pivot Arm Assembly (Incl. Ref. #19-21)	2
3	25-7740	Knob – Arm	2
4	65-5440	Spring Arm Assembly	2
5	66-0360	Cap – End	2
7	65-5190	Bracket – Belt Guide	1
8	49-2040	Screw – Self Tapping	8
9	62-6660	Spacer	1
10	60-8840	Pulley – Half	2
11	3296-5	Nut – Lock	1
12	3256-24	Washer – Flat	1
13	66-0210	V-Belt	1
14	3272-5	Pin – Cotter	1
15	76-2930	Retainer – Cable	1
16	76-0920	Lever – Shift	1
17	65-4770	Shaft – Output	1
18	237-153	Seal – O-Ring	2
19	47-2900	Bushing – Sleeve	2
20	302-56	Fitting – Grease	2

Ref. No.	Part No.	Description	No. Used
21	48-2060	Bearing –Needle	2
22	65-4730	Washer – Thrust (Inner)	2
23	65-4740	Washer – Thrust (Keyed)	4
24	65-2720	Ring – Retaining	4
25	65-4710	Ring – Friction	2
26	65-4760	Washer –Clutch	2
27	66-6050	Key – Rocking (L.H.)	1
*	66-6040	Key – Rocking (R.H.)	1
28	65-4750	Pinion	2
29	65-4720	Spring – Compression	2
30	74-1660	Cover – Wheel	2
31	11-9519	Wheel Tire & Gear Assy. (Incl. Ref. #32)	2
32	27-6250	Bushing – Wheel	4
33	27-6231	Bolt – Wheel	2
34	74-1670	Spacer – Wheel Cover	2
35	52-3620	Nut – Lock	2
36	65-5220	Screw – Cap Socket Hd.	2
37	60-8870	Yoke – Shift	1
38	29-9570	Bushing – Yoke	1

*Not Illustrated

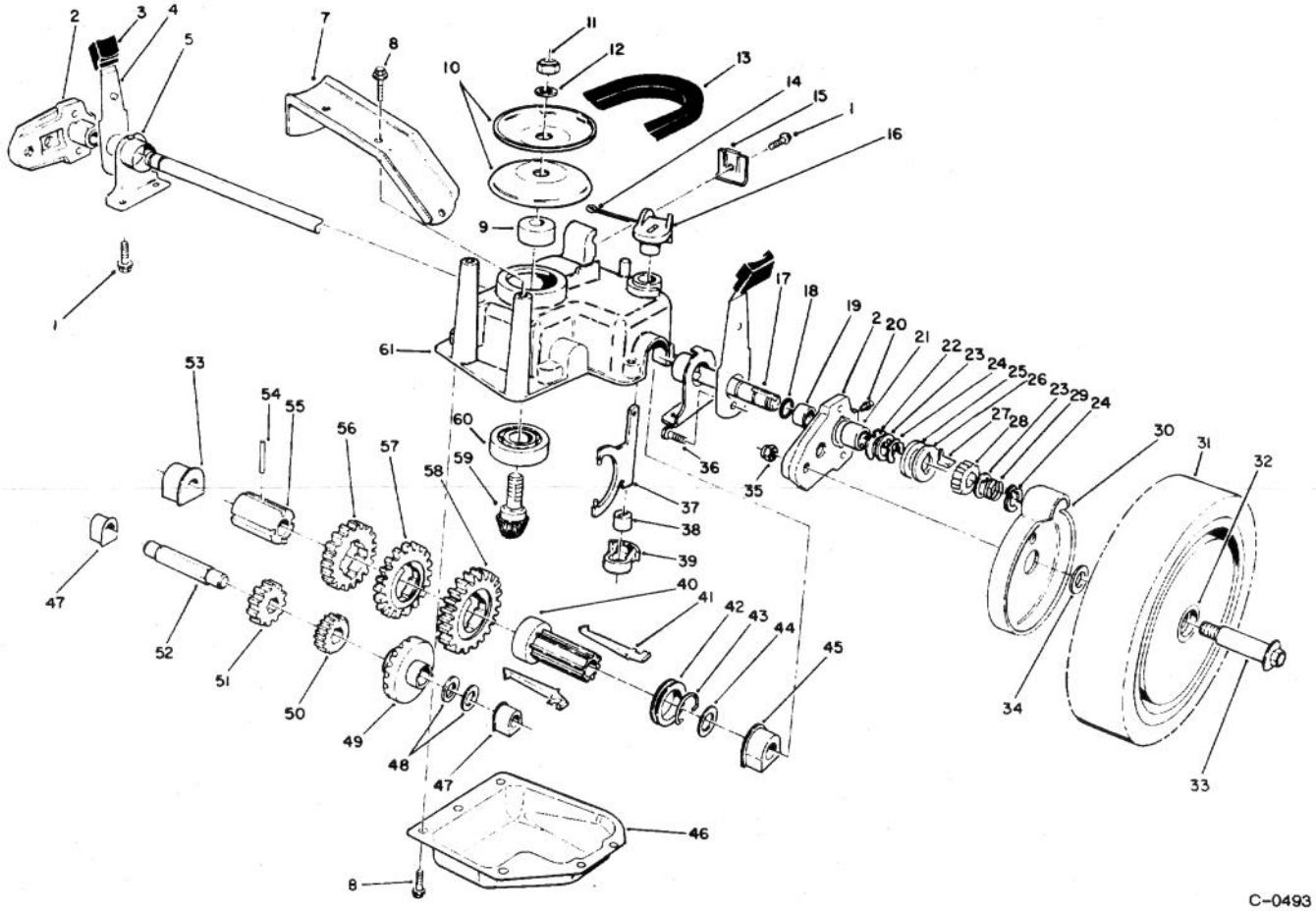

GEAR CASE ASSEMBLY (Continued)
(Model 26620B–0900862 & Up, Model 26620BG–0901242 & Up)

Ref. No.	Part No.	Description	No. Used
39	60–8810	Retainer – Shift Fork	1
40	76–0780	Sleeve – Shift Key	1
41	76–0760	Key – Shift	2
42	76–0770	Collar – Shift	1
43	65–5250	Clip – Spring	1
44	36–4780	Washer – Thrust	1
45	60–8770	Bushing – Output Shaft	1
46	60–8730	Cover – Gear Case	1
47	60–8750	Bushing – Intrmdt. Shaft	2
48	36–4791	Washer – Thrust	2
49	55–3760	Gear – Pinion 15T	1
50	55–3780	Gear – Pinion 20T	1

Ref. No.	Part No.	Description	No. Used
51	55–3800	Gear – Pinion 25T	1
52	60–8800	Shaft – Intermediate	1
53	60–8850	Bushing – Output Shaft	1
54	32121–120	Pin – Coil	1
55	60–8790	Sleeve – Gear	1
56	55–3810	Gear – 39T (3rd Gear)	1
57	55–3790	Gear – 44T (2nd Gear)	1
58	55–3770	Gear – 49T (1st Gear)	1
59	60–8890	Pinion – Bevel	1
60	38–7820	Bearing – Ball	1
61	60–8710	Case – Gear (Upper)	1
*	62–6673	Gear Case Assy. Complete	1

*Not Illustrated

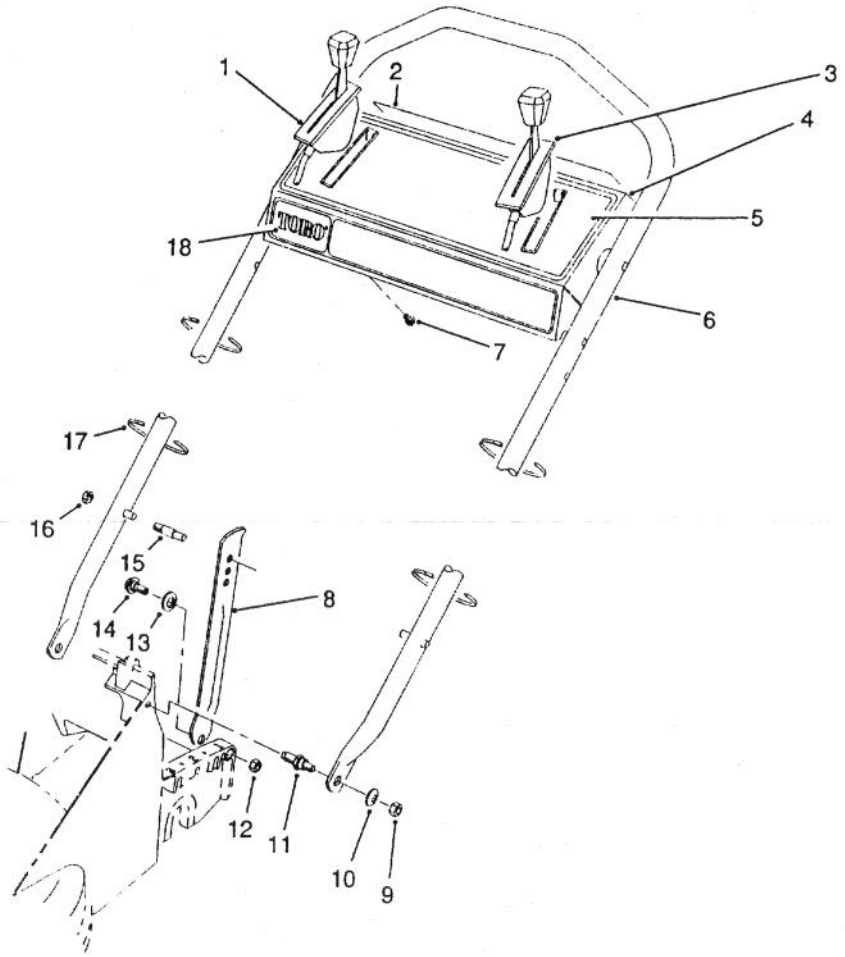

C-0180

HANDLE ASSEMBLY

Ref. No.	Part No.	Description	No. Used
1	74-3560	Control - Ground Speed (Model 26620B-0900101 thru 0900861, Model 26620BG-0900101 thru 0901241) Bend Type #6 Sheath Lg. 51-1/4" (130.2cm) Wire Lg. 2-1/4" (5.7cm)	1
*	76-2710	Control - Ground Speed (Model 26620B-0900862 & Up, Model 26620BG-0901242 & Up) Bend Type #6 Sheath Lg. 51" (129.5cm) Wire Lg. 3-1/8" (7.9cm)	1
2	66-1790	Decal - Danger (Model 26620B Only)	1
*	72-8030	Decal - Danger (Model 26620BG Only)	1
3	66-0230	Control - Throttle Bend Type #2 Sheath Lg. 44-3/4" (113.7cm) Wire Lg. 2-1/2" (6.4cm)	1
4	13-6019	Control Panel Assembly (Incl. Ref. #2 & 5)	1
5	66-0290	Decal - Instruction	1
6	66-0320	Handle	1
7	32104-76	Screw - Self Tapping	4
8	65-5730	Latch - Handle	2
9	3296-29	Nut - Lock	2
10	3256-23	Washer - Flat	2
11	65-5090	Screw - Shoulder Stud	2
12	3296-29	Nut - Lock	2
13	256-313	Washer - Nylon	2
14	5-2490	Screw - Shoulder	2
†15	49-2750	Pin - Handle	2
†16	3296-47	Nut - Lock	2
17	3290-378	Tie - Cable	4
18	66-1770	Decal - TORO	1

*Not Illustrated
†Service Replacement Parts

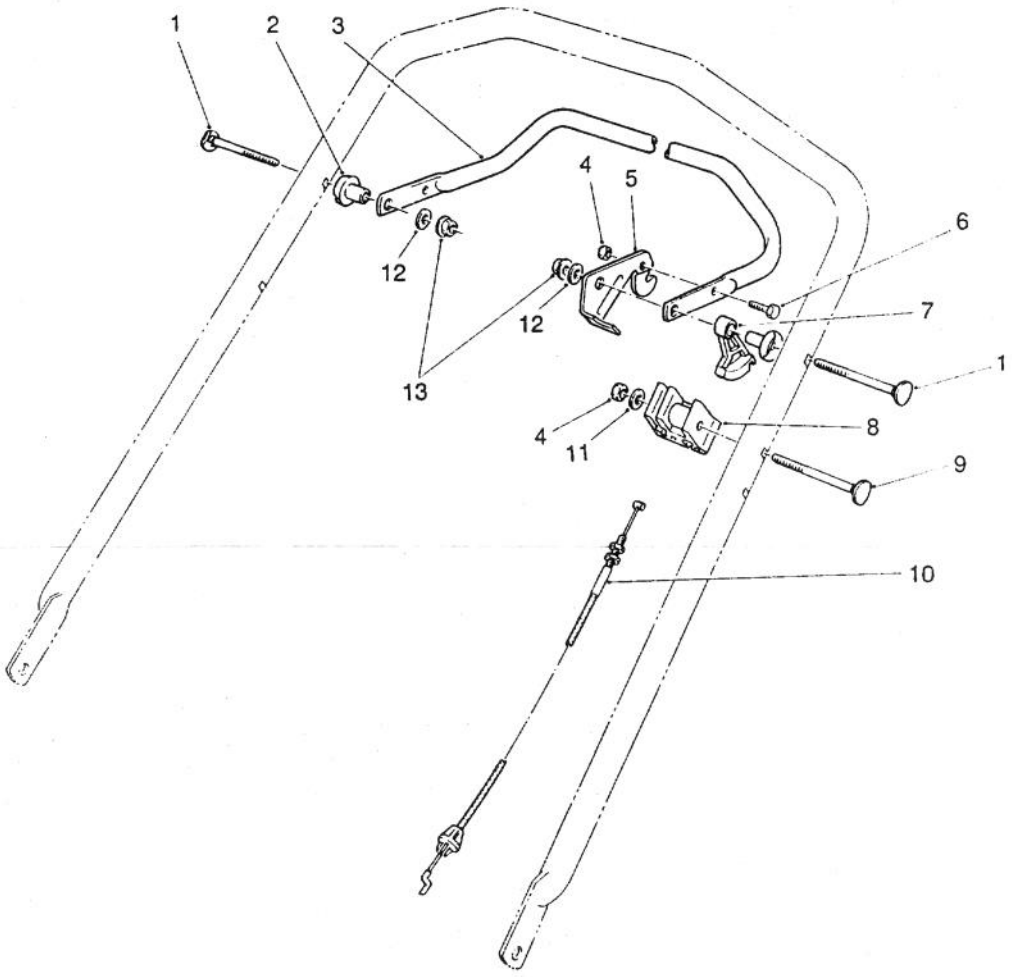

C-0495

TRACTION CONTROL ASSEMBLY

Ref. No.	Part No.	Description	No. Used
1	17-9426	Screw - Handle	2
2	66-0330	Support - Spacer	2
3	52-7430	Control Bar Assembly	1
4	3296-42	Nut - Lock	2
5	46-8800	Lever - Control	1
6	321-3	Screw - Cap Hex. Hd.	1
7	46-5520	Lever - Traction	1

Ref. No.	Part No.	Description	No. Used
8	71-0960	Support - Cable	1
9	46-6432	Screw - Handle	1
10	71-0620	Cable - Traction	1
11	3256-22	Washer - Flat	1
12	3256-23	Washer - Flat	2
13	3296-29	Nut - Lock	2

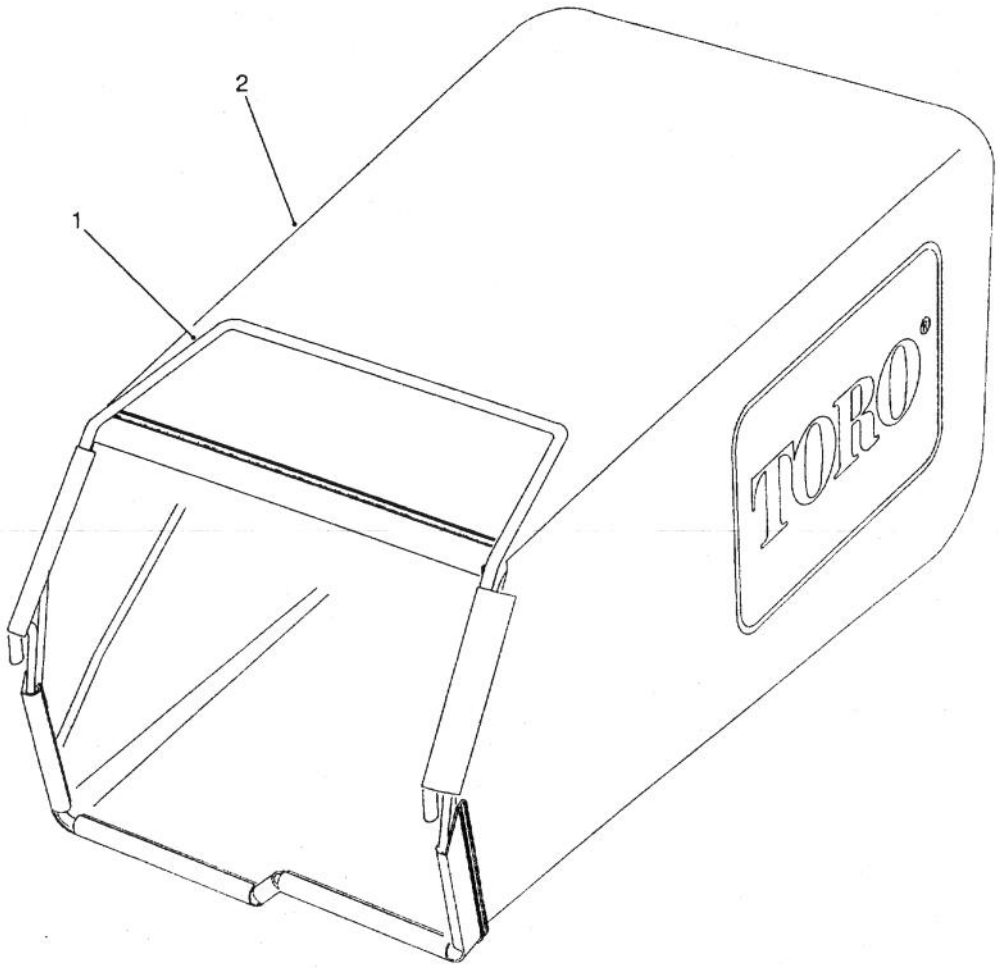

C-0168

GRASS BAG ASSEMBLY

Ref. No.	Part No.	Description	No. Used
1	76-1790	Frame - Grass Bag	1

Ref. No.	Part No.	Description	No. Used
2	66-0010	Bag	1

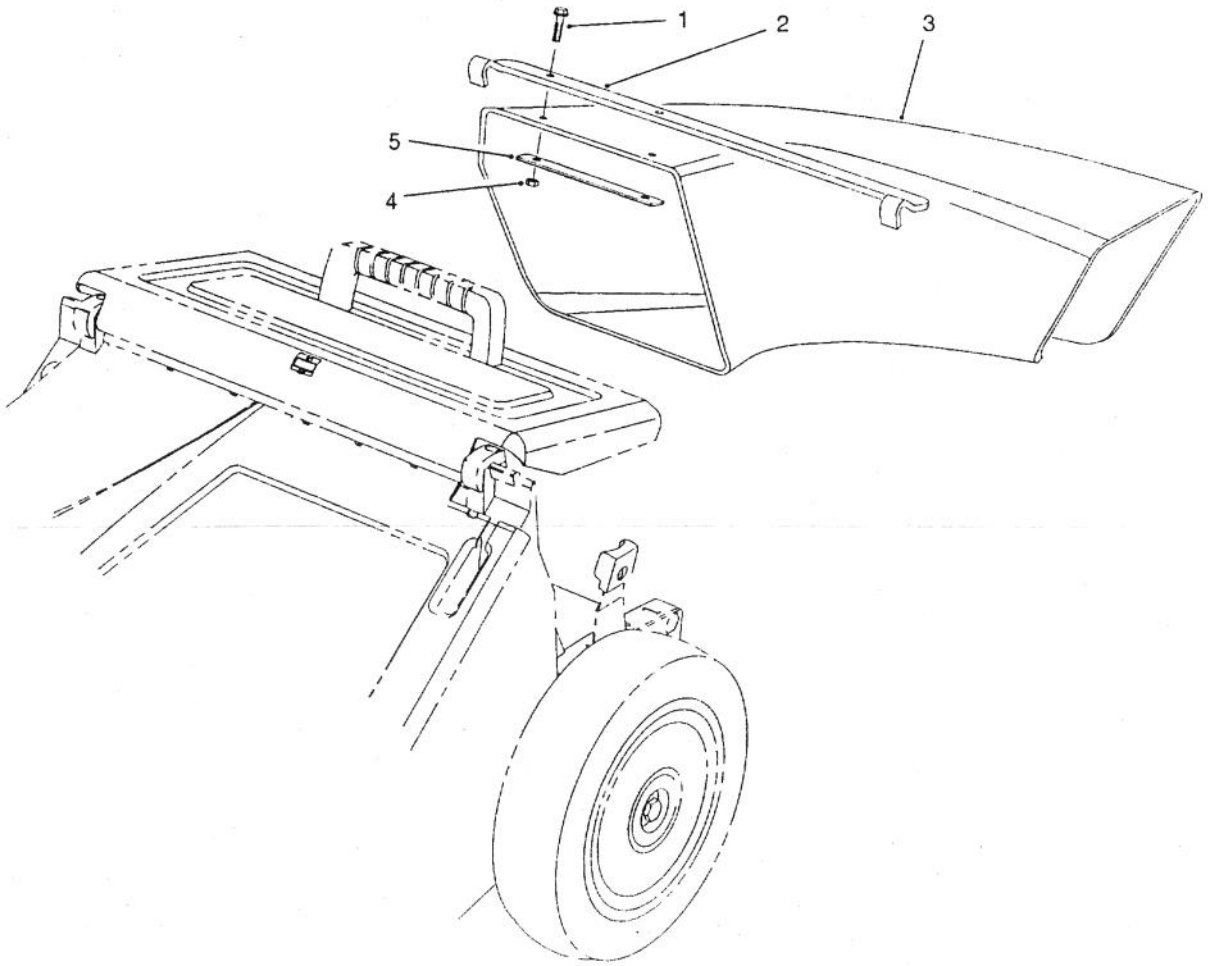

C–0169

SIDE DISCHARGE CHUTE MODEL NO. 59112 (Optional)

Ref. No.	Part No.	Description	No. Used
1	3290–126	Screw – Hex. Washer Hd.	2
2	66–0070	Bracket – Chute Hanger	1
3	65–5240	Chute – Discharge	1

Ref. No.	Part No.	Description	No. Used
4	3296–12	Nut – Lock	2
5	66–0060	Plate – Stress	1

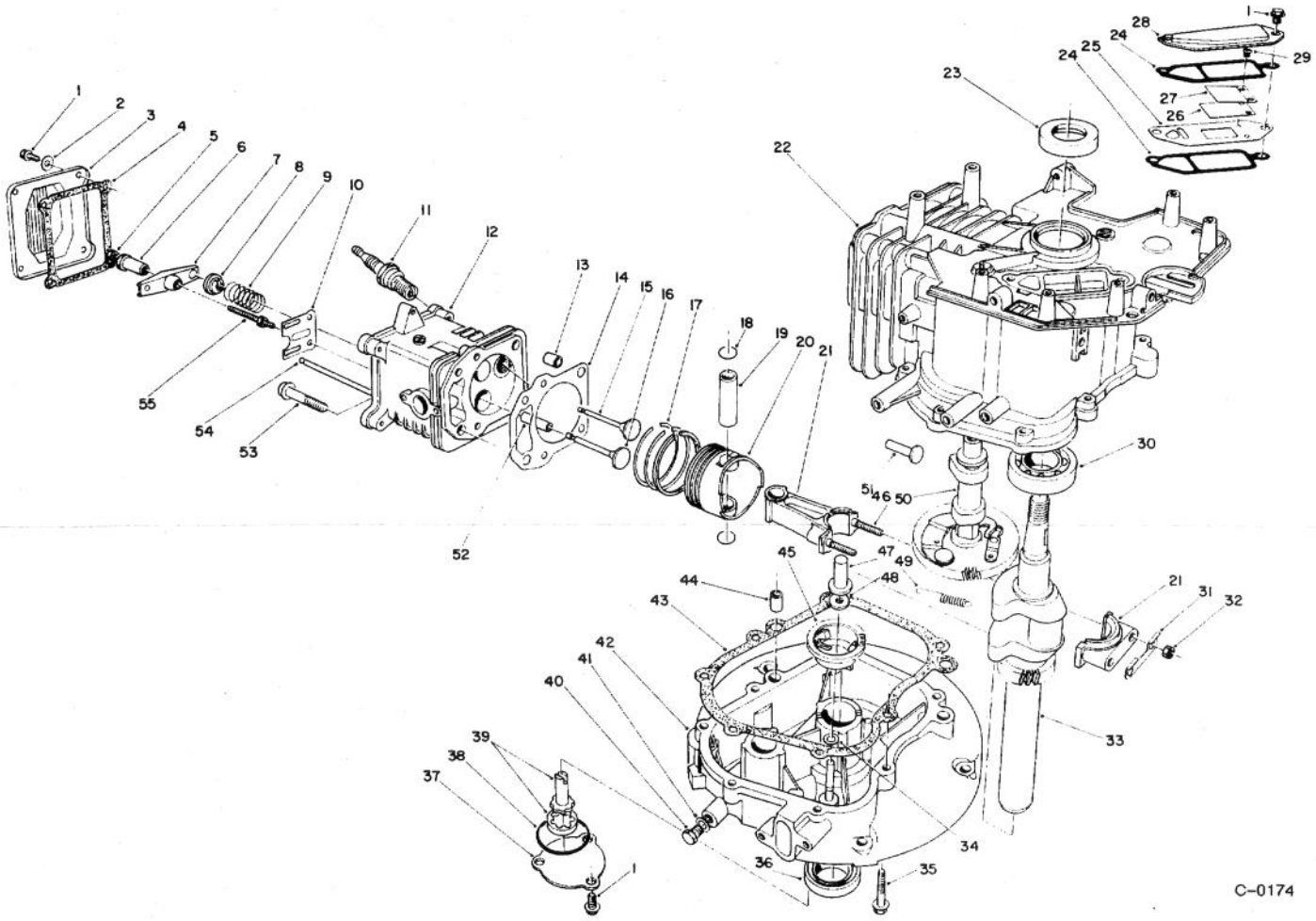

CRANKCASE ASSEMBLY
(Engine No. VMJ8 & VMK9)
(Model 26620B-0900101 thru 0902961, 0903407 & Up)
(Model 26620BG-0900101 & Up)

Ref. No.	Part No.	Description	No. Used
1	81-1170	Bolt	9
2	81-3790	Washer	4
3	81-3780	Cover - Rocker Arm	1
4	81-3770	Gasket - Cover	1
5	81-3760	Nut - Jam	2
6	81-3750	Pivot - Rocker Arm	2
7	81-3740	Arm - Rocker	2
8	81-3730	Retainer - Valve Spring	2
9	81-3720	Spring - Valve	2
10	81-3710	Guide - Push Rod	1
11	81-3250	Plug - Spark	1
12	81-5540	Head - Cylinder (Incl. Ref. #52)	1
*	81-5730	Cylinder Head Assembly (Incl. Ref. #1-10, 12 & 52-55)	1
13	81-3690	Pin - Dowel	2
14	81-4710	Gasket - Cylinder Head	1
*	81-3820	Gasket Set	1
15	81-3660	Valve - Exhaust	1
16	81-3670	Valve - Intake	1
17	81-3650	Piston Ring Set	1
18	50-0960	Circlip	2
19	81-3630	Pin - Piston	1
20	81-3620	Piston	1
21	81-3390	Connecting Rod Assembly (Incl. Ref. #31, 32 & 46)	1
22	81-3280	Block - Engine (Incl. Ref. #23 & 30)	1
23	81-3290	Seal - Upper Crankshaft	1
24	81-3300	Gasket - Breather	2
25		Plate - Breather	1
26		Valve - Reed	1
*	81-3370	Reed Valve Assembly (Incl. Ref. # 25 & 27-29)	1
27		Retainer - Reed Valve	1
28	81-3320	Cover - Breather	1
29		Screw - Reed Valve	2
30	81-3380	Bearing - Ball	1
31	81-3400	Plate - Lock	1

*Not Illustrated

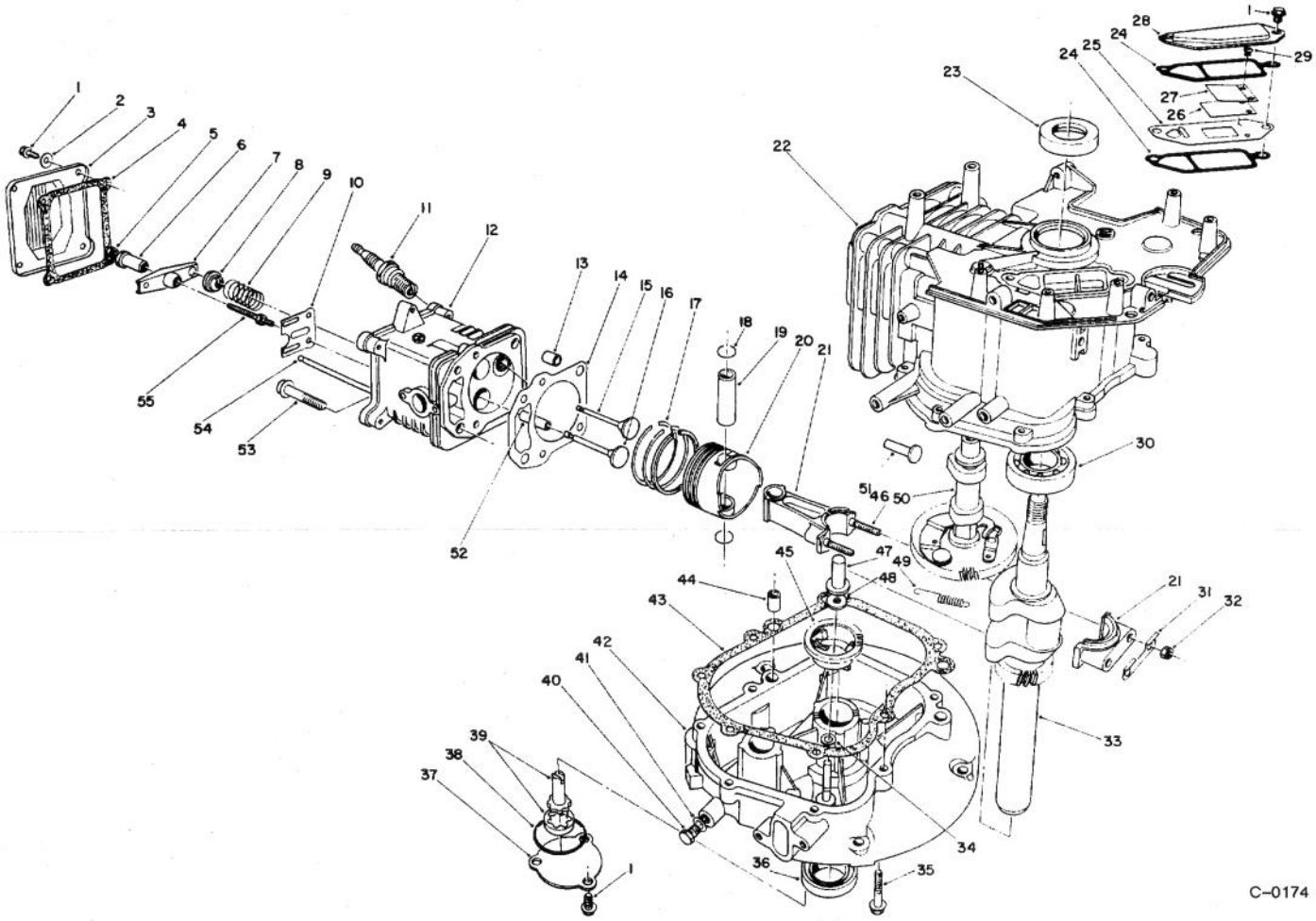

CRANKCASE ASSEMBLY (Continued)
(Engine No. VMJ8 & VMK9)
(Model 26620B–0900101 thru 0902961, 0903407 & Up)
(Model 26620BG–0900101 & Up)

Ref. No.	Part No.	Description	No. Used
32	50–0510	Nut	2
33	81–3420	Crankshaft	1
34	81–3440	Washer	1
35	81–3450	Bolt	7
36	81–3460	Seal – Lower Crankshaft	1
37	81–3470	Cover – Oil Pump	1
38	81–3480	Seal – O–Ring	1
39	81–3490	Oil Pump Assembly	1
40	81–4970	Plug – Oil Drain	1
41	81–3510	Gasket – Oil Plug	1
42	81–3520	Crankcase – Lower	1
43	81–3530	Gasket – Crankcase	1
44	50–0450	Pin – Dowel	2

Ref. No.	Part No.	Description	No. Used
45	81–3550	Governor Flyweight Assy.	1
46	81–3610	Stud – Connecting Rod	2
47	81–3560	Plunger – Governor	1
48	81–3570	Washer	1
49	81–3580	Spring – Comp. Release	1
50	81–5550	Camshaft Assembly (Incl. Ref. #49)	1
51	81–3600	Tappet	2
52	81–3830	Guide – Valve	2
53	50–0190	Bolt	4
54	81–3810	Rod – Push	2
55	81–3800	Stud – Rocker Arm	2
*	13–5929	Short Block Assembly	1

*Not Illustrated

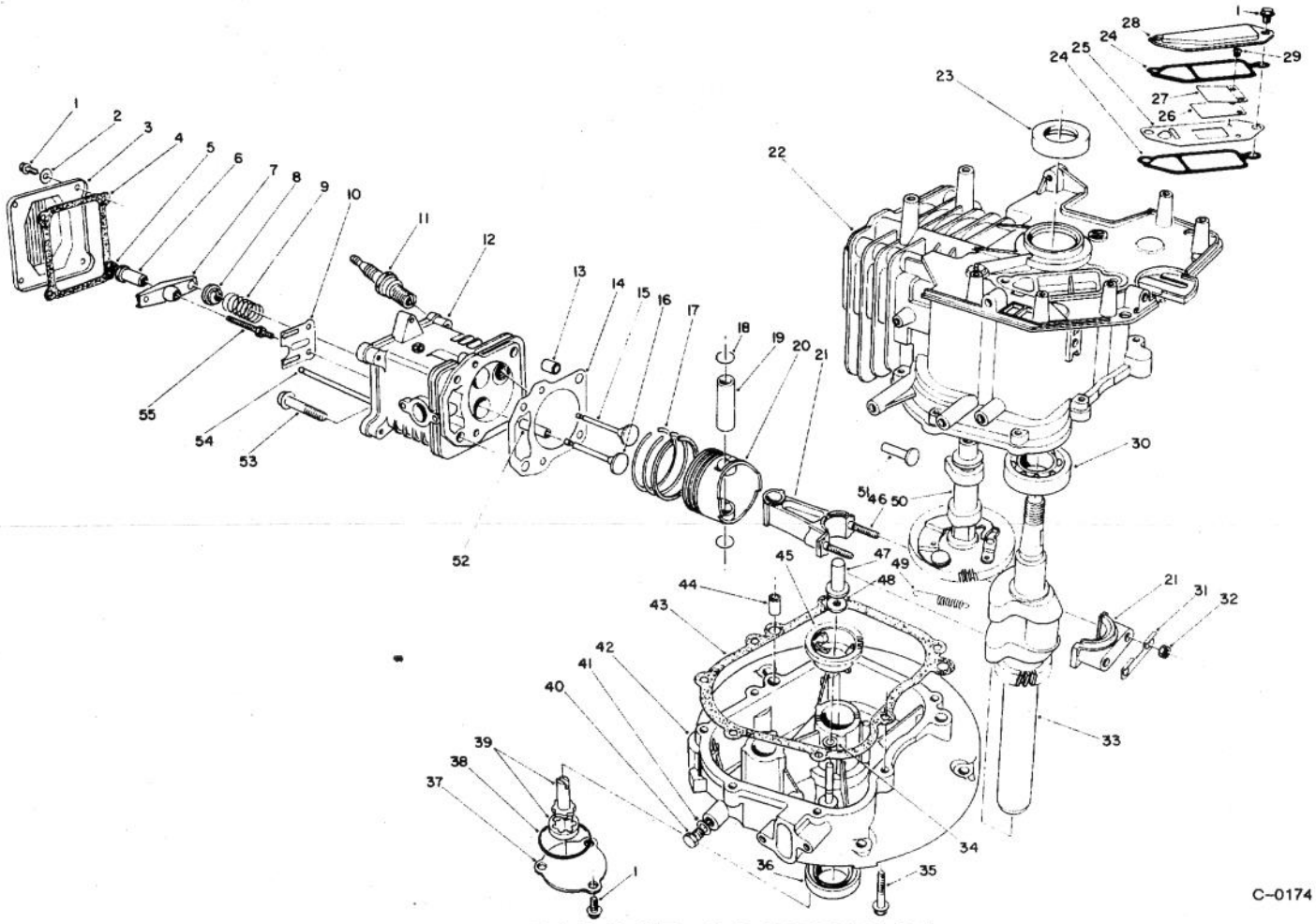

CRANKCASE ASSEMBLY
(Engine No. VMG6)
(Model 26620B–0902962 thru 0903406)

Ref. No.	Part No.	Description	No. Used
1	81–1170	Bolt	9
2	81–3790	Washer	4
3	81–3780	Cover – Rocker Arm	1
4	81–3770	Gasket – Cover	1
5	81–3760	Nut – Jam	2
6	81–3750	Pivot – Rocker Arm	2
7	81–3740	Arm – Rocker	2
8	81–3730	Retainer – Valve Spring	2
9	81–3720	Spring – Valve	2
10	81–3710	Guide – Push Rod	1
11	81–3250	Plug – Spark	1
12	81–3700	Head – Cylinder (Incl. Ref. #52)	1
*	81 3840	Cylinder Head Assembly (Incl. Ref. #1–10, 12 & 52–55)	1
13	81–3690	Pin – Dowel	2
14	81–4710	Gasket – Cylinder Head	1
*	81–3820	Gasket Set	1
15	81–3670	Valve – Intake	1
16	81–3660	Valve – Exhaust	1

Ref. No.	Part No.	Description	No. Used
17	81–3650	Piston Ring Set	1
18	50–0960	Circlip	2
19	81–3630	Pin – Piston	1
20	81–3620	Piston	1
21	81–3390	Connecting Rod Assembly (Incl. Ref. #31, 32 & 46)	1
22	81–3280	Block – Engine (Incl. Ref. #23 & 30)	1
23	81–3290	Seal – Upper Crankshaft	1
24	81–3300	Gasket – Breather	2
25		Plate – Breather	1
26		Valve – Reed	1
*	81–3370	Reed Valve Assembly (Incl. Ref. # 25 & 27–29)	1
27		Retainer – Reed Valve	1
28	81–3320	Cover – Breather	1
29		Screw – Reed Valve	2
30	81–3380	Bearing – Ball	1
31	81–3400	Plate – Lock	1
32	50–0510	Nut	2
33	81–3420	Crankshaft	1

*Not Illustrated

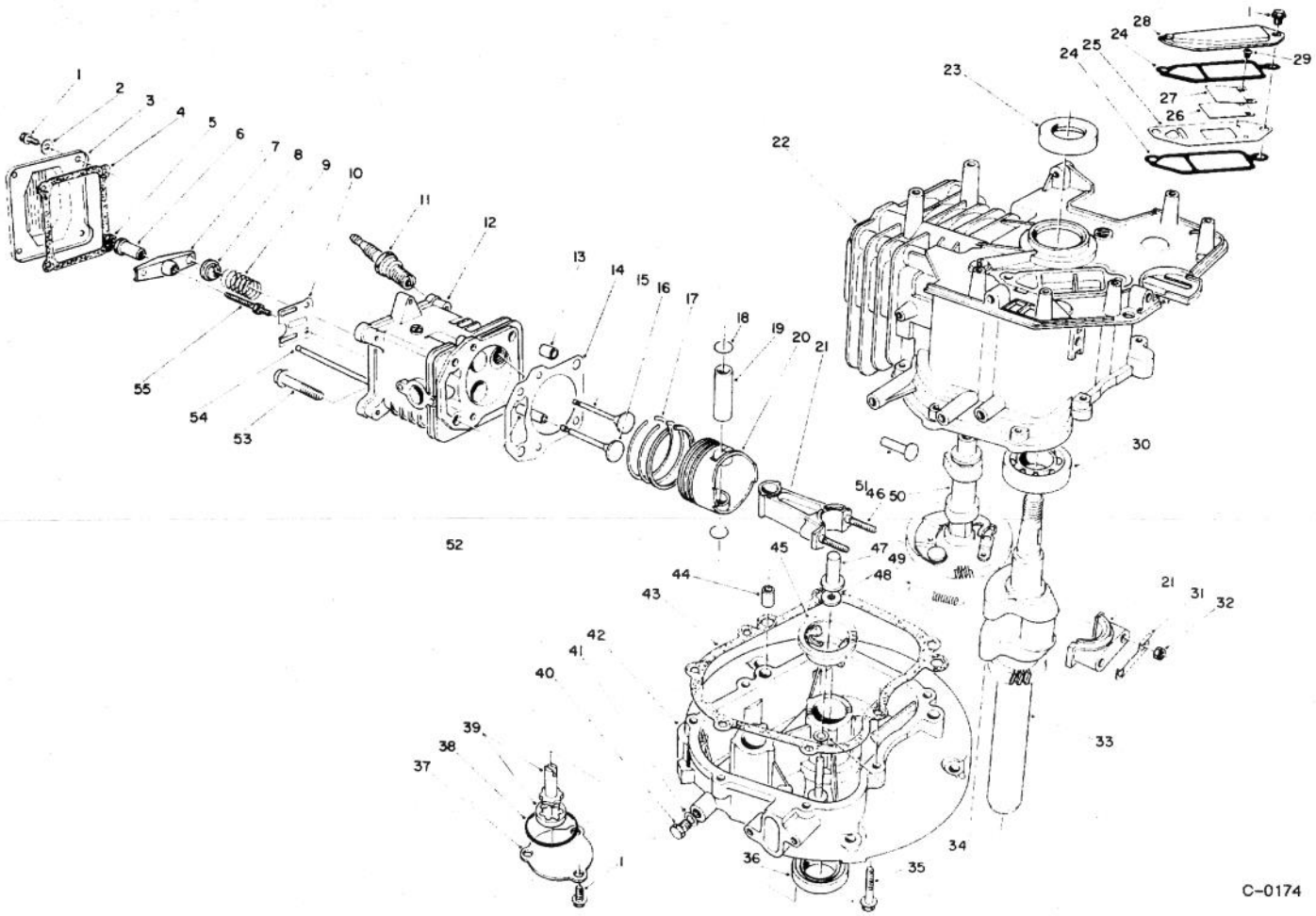

CRANKCASE ASSEMBLY (Continued)
(Engine No. VMG6)
(Model 26620B–0902962 thru 0903406)

Ref. No.	Part No.	Description	No. Used
34	81-3440	Washer	1
35	81-3450	Bolt	7
36	81-3460	Seal – Lower Crankshaft	1
37	81-3470	Cover – Oil Pump	1
38	81-3480	Seal – O-Ring	1
39	81-3490	Oil Pump Assembly	1
40	81-4970	Plug – Oil Drain	1
41	81-3510	Gasket – Oil Plug	1
42	81-3520	Crankcase – Lower	1
43	81-3530	Gasket – Crankcase	1
44	50-0450	Pin – Dowel	2
45	81-3550	Governor Flyweight Assy.	1

Ref. No.	Part No.	Description	No. Used
46	81-3610	Stud – Connecting Rod	2
47	81-3560	Plunger – Governor	1
48	81-3570	Washer	1
49	81-3580	Spring – Comp. Release	1
50	81-3590	Camshaft Assembly (Incl. Ref. #49)	1
51	81-3600	Tappet	2
52	81-3830	Guide – Valve	2
53	50-0190	Bolt	4
54	81-3810	Rod – Push	2
55	81-3800	Stud – Rocker Arm	2
*	12-2599	Short Block Assembly	1

*Not Illustrated

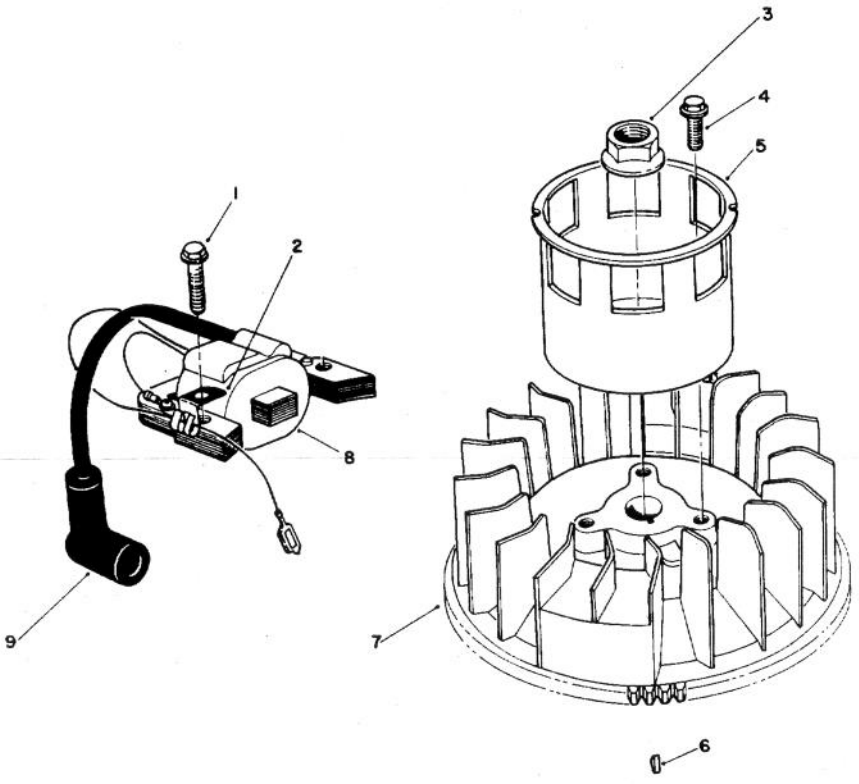

T-0723

MAGNETO & FLYWHEEL ASSEMBLY (Engine No. VMG6, VMJ8 & VMK9)

Ref. No.	Part No.	Description	No. Used
1	53-0860	Bolt	2
2	81-1480	Clamp	1
3	81-3890	Nut	1
4	81-1300	Bolt	3
5	81-3910	Cup - Starter	1
6	81-3930	Key - Flywheel	1
7	81-3920	Flywheel	1

Ref. No.	Part No.	Description	No. Used
8	81-5580	Magneto Coil Assembly (Model 26620B-0900101 thru 0902961, 0903407 & Up, Model 26620BG-0900101 & Up)	1
*	81-3850	Magneto Coil Assembly (Model 26620B-0902962 thru 0903406)	1
9	81-3860	Cover - Spark Plug	1

*Not Illustrated

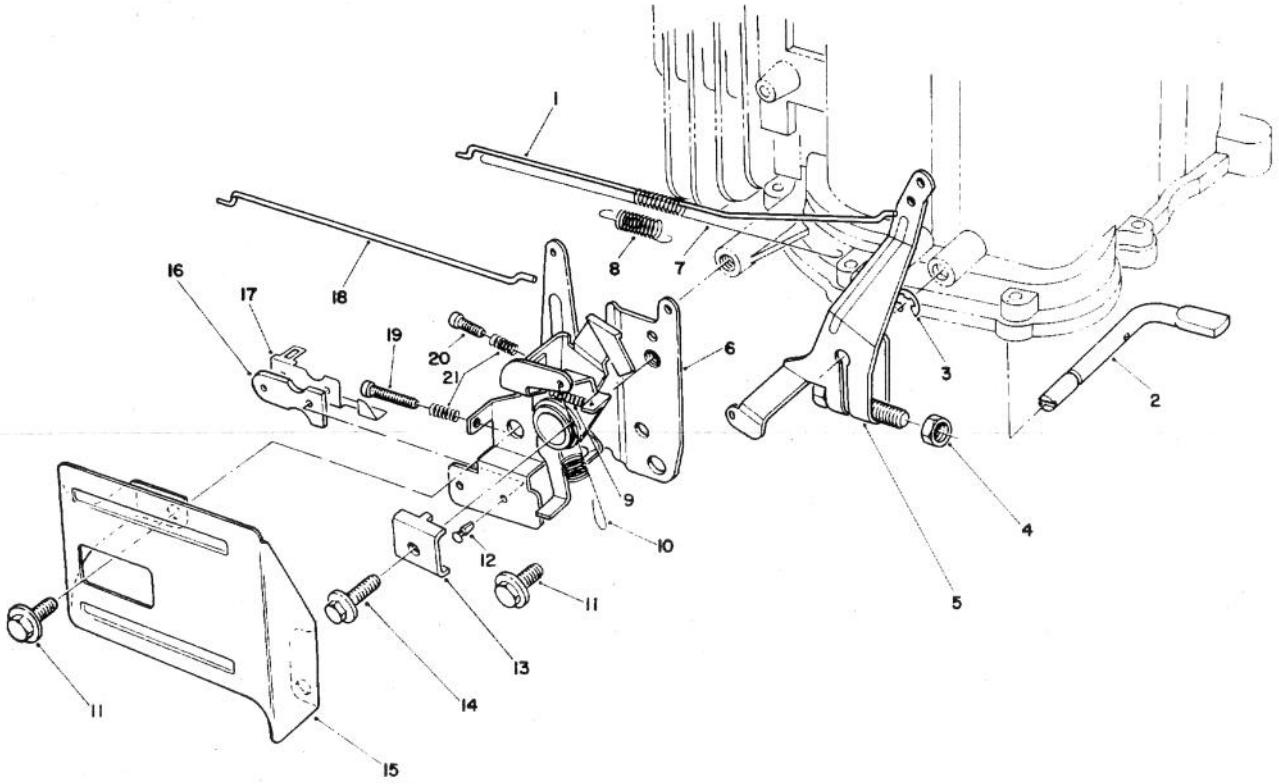

C-0159

GOVERNOR ASSEMBLY
(Engine No. VMG6, VMJ8 & VMK9)

Ref. No.	Part No.	Description	No. Used
1	81-4450	Rod - Carburetor	1
2	81-4480	Shaft - Governor	1
3	81-4540	E-Ring	1
4	81-3760	Nut	1
5	81-4500	Governor Arm Assembly	1
6	81-4510	Throttle & Choke Control	1
7	81-4470	Spring - Carburetor Rod	1
8	81-4460	Spring - Choke Lever	1
9	81-4570	Spring	1
10	81-4520	Spring - Governor	1
11	81-1170	Bolt	2
12	81-4530	Rivet	2

Ref. No.	Part No.	Description	No. Used
13	81-1690	Clamp - Cable	1
14	50-0130	Bolt	1
15	57-5750	Guard - Throttle	1
16	81-1830	Insulator - Kill Switch	1
17	81-1840	Terminal - Switch	1
18	81-4440	Rod - Choke	1
19	81-4560	Screw	1
20	81-4550	Screw	1
21	81-2900	Spring	2
22	81-0380	Screw	1
23	81-4780	Clamp	1

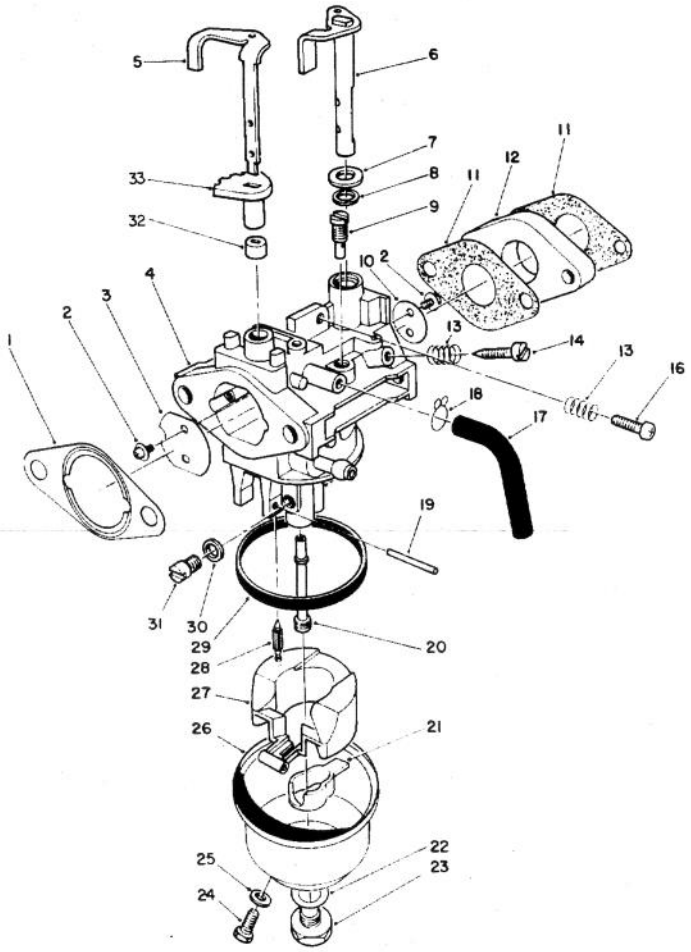

C-0160

CARBURETOR ASSEMBLY (Engine No. VMG6, VMJ8 & VMK9)

Ref. No.	Part No.	Description	No. Used
1	81-4250	Gasket - Air Cleaner	1
2	81-2710	Screw - Choke Valve	4
3	81-2720	Valve - Choke	1
4		Body - Carburetor	1
5	81-5500	Shaft - Choke Control	1
6	81-2920	Shaft - Throttle Valve	1
7	81-4280	Washer	1
8	81-4290	Seal - Throttle Shaft	1
9	81-5620	Jet - Pilot (#38.8)	1
10	81-2940	Valve - Throttle	1
11	81-5560	Gasket - Carburetor (Model 26620B-0900101 thru 0902961, 0903407 & Up, Model 26620BG-0900101 & Up)	2
*	81-2570	Gasket - Carburetor (Model 26620B-0902962 thru 0903406)	2
12	81-5570	Block - Insulator (Model 26620B-0900101 thru 0902961, 0903407 & Up, Model 26620BG-0900101 & Up)	1
12	81-0460	Block - Insulator (Model 26620B-0902962 thru 0903406)	1
13	81-2580	Spring - Pilot Screw	2
14	50-2360	Screw - Pilot	1
16	50-0250	Screw - Idle Stop	1
17	81-4310	Tube - Bowl Vent	1
18	81-4300	Clamp	1
19	81-5600	Pin - Hinge (Model 26620B-0900101 thru 0902961, 0903407 & Up, Model 26620BG-0900101 & Up)	1
*	81-0980	Pin - Hinge (Model 26620B-0902962 thru 0903406)	1
20	81-5630	Nozzle - Main (Model 26620B-0900101 thru 0902961, 0903407 & Up, Model 26620BG-0900101 & Up)	1
*	81-4330	Nozzle - Main (Model 26620B-0902962 thru 0903406)	1

*Not Illustrated

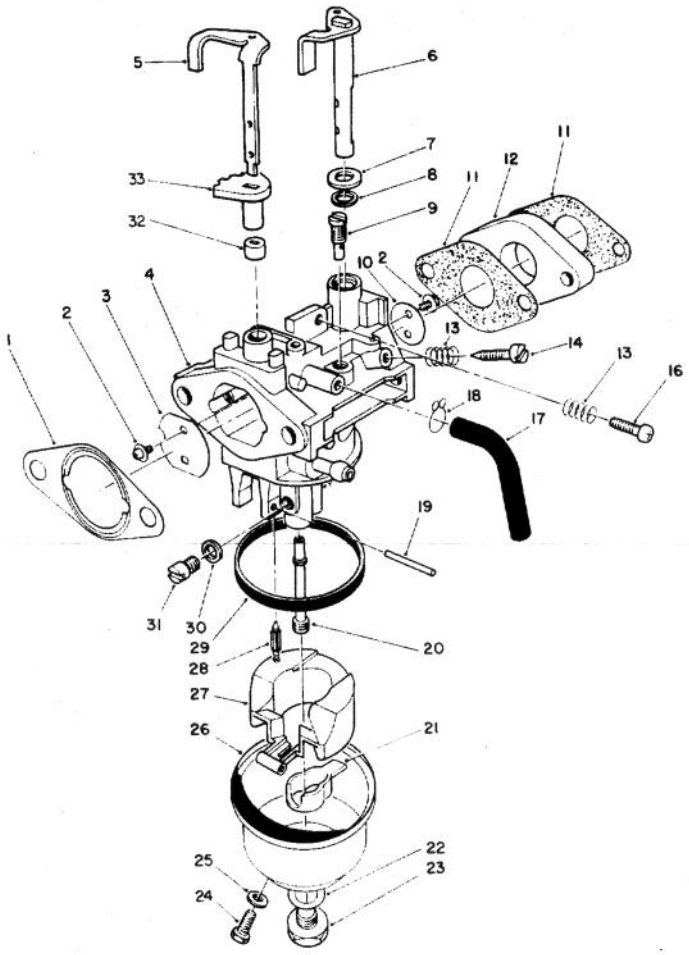

C-0160

CARBURETOR ASSEMBLY (Continued)
(Engine No. VMG6, VMJ8 & VMK9)

Ref. No.	Part No.	Description	No. Used
21	81-4940	Spacer - Float	1
22	81-2650	Gasket - Bowl Screw	1
23	81-2660	Screw - Bowl	1
24	81-2670	Screw - Drain	1
25	81-2680	Gasket - Drain Screw	1
26	81-4340	Bowl - Float	1
27	81-4920	Float	1
28	81-4700	Needle	1
29	81-2630	Gasket - Float Bowl	1
30	81-4350	Spacer	1
31	81-2340	Jet - Main (#72.5)	1
*	50-5610	Jet - Main (#70 High Alt.)	1
32	81-5530	Ring - Choke (Lower)	1
33	81-5520	Ring - Choke (Upper)	1

Ref. No.	Part No.	Description	No. Used
*	81-4270	Choke Shaft Assembly (Incl. Ref. #5 & 32-33)	1
*	81-5650	Carburetor Repair Kit (Incl. Ref. #1, 11, 22, 25, 28 & 29)	1
*	81-5590	Carburetor Assembly (Incl. Ref. #2-33) (Model 26620B-0900101 thru 0902961, 0903407 & Up, Model 26620BG-0900101 & Up)	1
*	81-4750	Carburetor Assembly (Incl. Ref. #2-33) (Model 26620B-0902962 thru 0903406)	1

*Not Illustrated

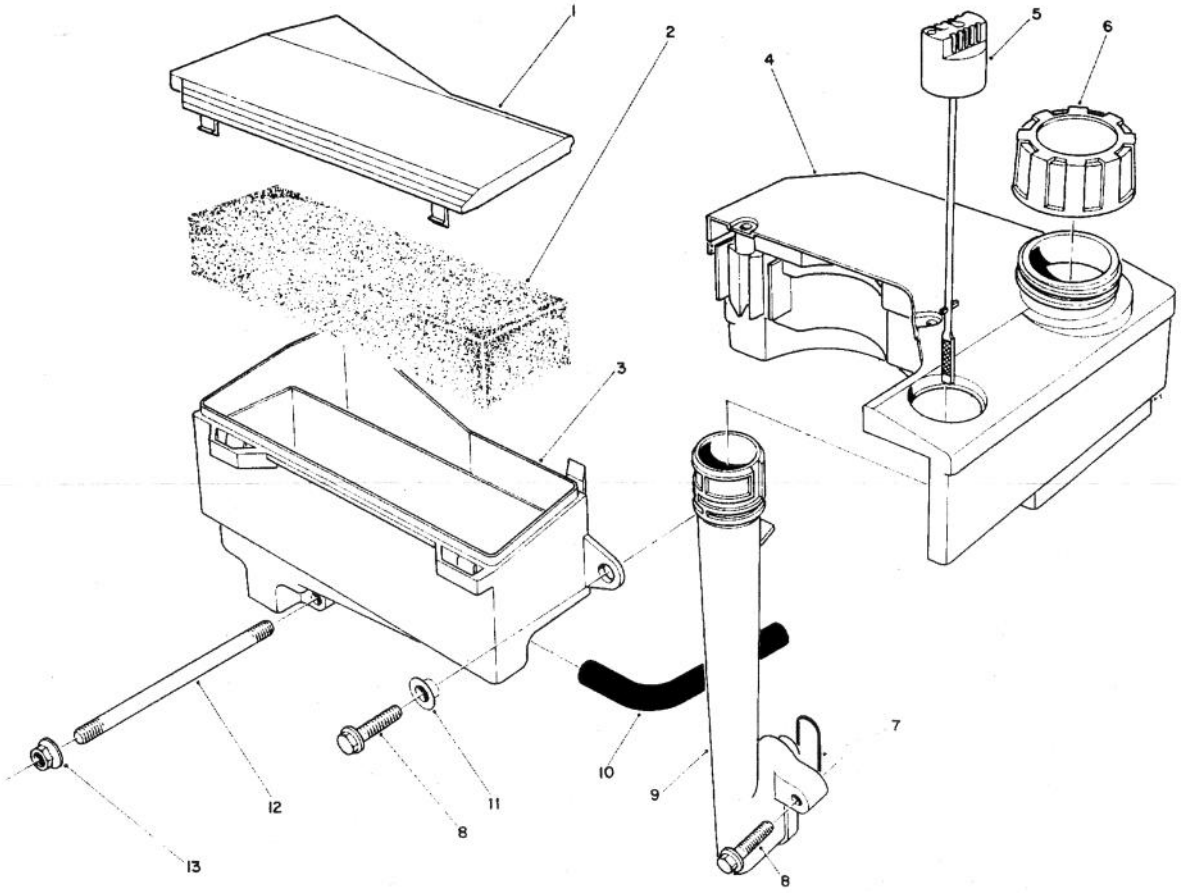

AIR CLEANER & FUEL TANK ASSEMBLY (Engine No. VMG6, VMJ8 & VMK9)

Ref. No.	Part No.	Description	No. Used
1	81-4110	Cover - Air Cleaner	1
2	81-4120	Filter - Foam	1
3		Body - Air Cleaner	1
4	55-3530	Tank - Fuel	1
5	81-4140	Dipstick - Oil	1
6	55-3570	Cap - Gas	1
7	81-4150	Seal - Oil Tube	1
8	81-4160	Bolt	3

Ref. No.	Part No.	Description	No. Used
9	81-4170	Tube - Oil Fill	1
10	81-4180	Hose - Crankcase Breather	1
11	81-4200	Spacer	1
12	81-4220	Stud - Carburetor	2
13	50-7180	Nut	2
*	81-4240	Air Cleaner Assembly (Incl. Ref. #1 & 3)	1

*Not Illustrated

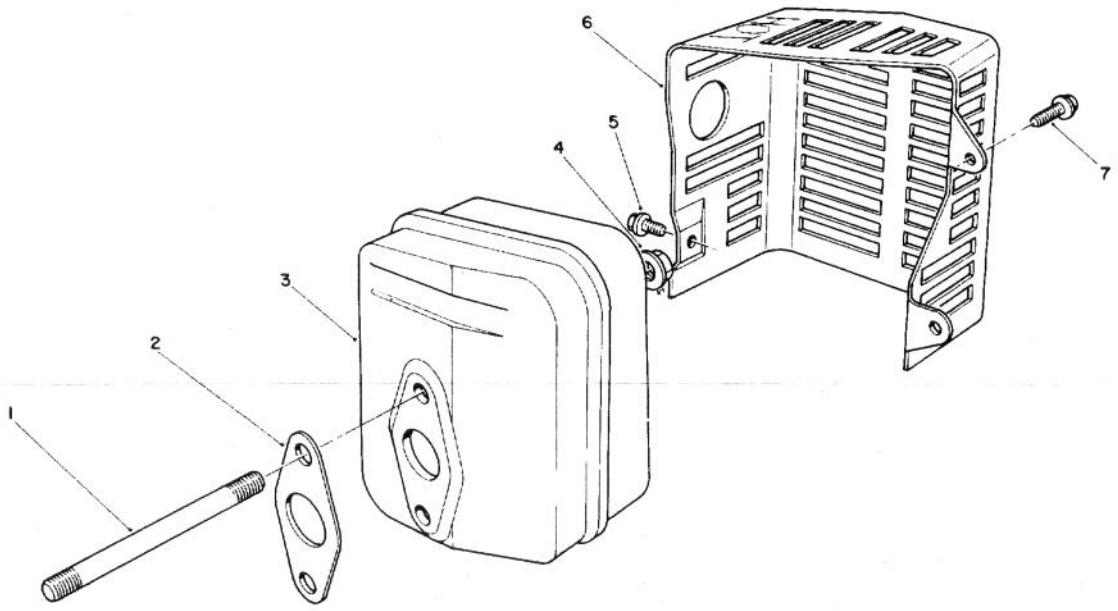

T-0726

MUFFLER ASSEMBLY
(Engine No. VMG6, VMJ8 & VMK9)

Ref. No.	Part No.	Description	No. Used
1	81-4380	Stud - Muffler	2
2	81-4390	Gasket - Muffler	1
3	81-4400	Muffler	1
4	50-0530	Nut	2
5	81-4420	Screw	1
6	81-4430	Cover - Muffler	1
7	81-1170	Bolt	2
*	56-6730	Spark Arrester Kit (Incl. Ref. #2) Optional	1

*Not Illustrated

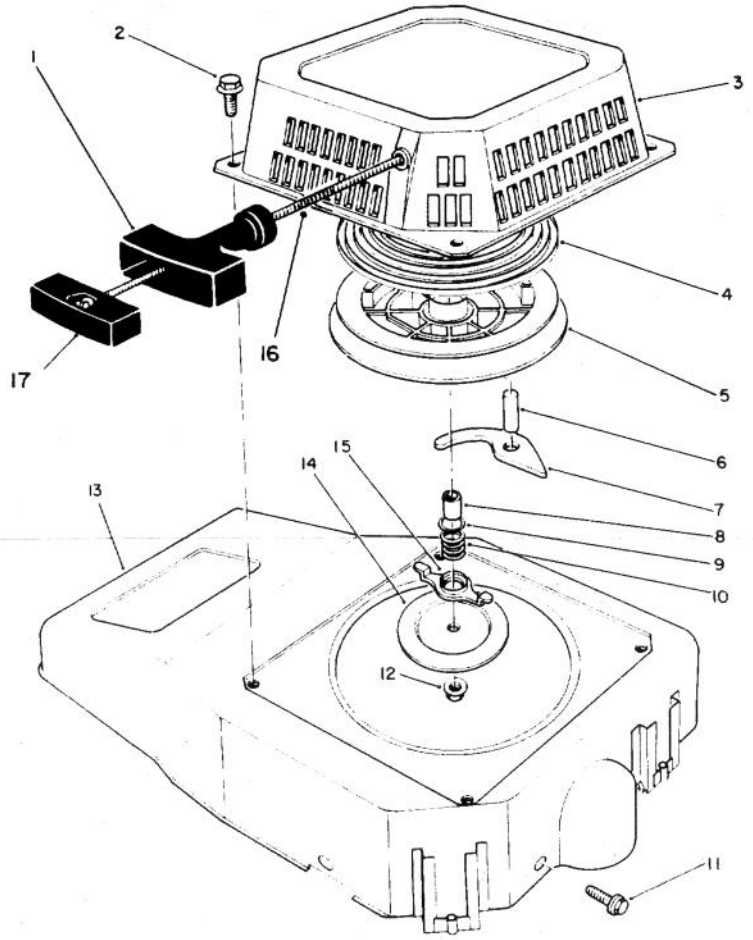

C-0162

RECOIL ASSEMBLY
(Engine No. VMG6, VMJ8 & VMK9)

Ref. No.	Part No.	Description	No. Used
1	81-4000	Handle	1
2	81-1280	Bolt	4
3	81-3970	Case - Recoil	1
4	81-4010	Spring - Recoil	1
5	81-4020	Reel - Rope Pulley	1
6	81-4030	Pin	1
7	81-4040	Pawl	1
8	81-4050	Spacer	1
9	81-4060	Washer	1
10	81-4070	Spring - Friction	1
11	81-1170	Bolt	3

Ref. No.	Part No.	Description	No. Used
12	81-4100	Nut - Lock	1
13	81-3960	Shroud - Blower	1
14	81-4090	Plate - Friction	1
15	81-4080	Guide - Pawl	1
16	81-1270	Rope - Recoil	1
17	81-4960	Retainer - Rope	1
*	81-3990	Rope & Handle Assembly (Incl. Ref. #1, 15 & 17)	1
*	81-3270	Recoil Starter Assembly (Incl. Ref. #1, 3-10, 12-15 & 17)	1

*Not Illustrated

PRODUCT CHANGES

In an effort to make improvements available to TORO owners as quickly as possible, minor changes are incorporated into Toro's products from time to time that do not become immediately shown in the Parts Catalog. If such a change has been made in your unit, which is not reflected in your manual, see your TORO Distributor or his Authorized TORO Service Dealer for information and part numbers.

IDENTIFICATION AND ORDERING

MODEL AND SERIAL NUMBERS

The Lawnmower has two identification numbers; a model number and a serial number. The two numbers are stamped on a decal which is located on the rear of the housing. In any correspondence concerning the lawnmower, supply model and serial numbers to assure that correct information and replacement parts are obtained.

To order replacement parts from an Authorized TORO Service Dealer, supply the following information:
1. Model and serial number of the lawnmower.
2. Part number, description, and the quantity of part(s) desired.

NOTE: Do not order by reference number if a parts catalog is being used; use the PART NUMBER.

COUNTRIES OTHER THAN THE UNITED STATES OR CANADA

Customers who have purchased TORO products exported from the United States or Canada should contact their Toro Distributor (Dealer) to obtain guarantee policies for your country, province or state. If for any reason you are dissatisfied with your Distributor's service or have difficulty obtaining guarantee information, contact the TORO importer. If all other remedies fail, you may contact us at The Toro Company.

MAINTENANCE RECORD

Date								

Compliance with Radio Interference Regulations Certified.
Certifie Conforme au Reglement sur le Brouillage Radioelectrique.

Litho in U.S.A.