Form No. 3355-138 Rev B

TORO®

Count on it.

Operator's Manual

Reelmaster® 5200-D/5400-D Two-Wheel and Four-Wheel Drive Traction Units

Model No. 03540—Serial No. 260000201 and Up
Model No. 03543—Serial No. 260000201 and Up
Model No. 03544—Serial No. 260000201 and Up

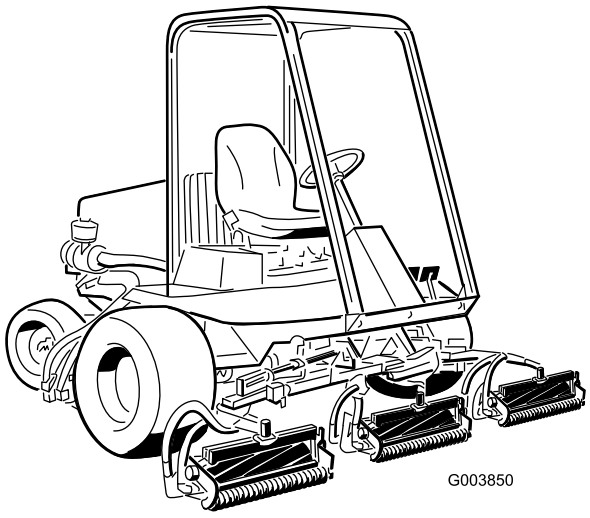

CE

Register your product at www.Toro.com

Original Instructions (EN)

Warning

CALIFORNIA
Proposition 65 Warning

Diesel engine exhaust and some of its constituents are known to the State of California to cause cancer, birth defects, and other reproductive harm.

Important: This engine is not equipped with a spark arrester muffler. It is a violation of California Public Resource Code Section 4442 to use or operate the engine on any forest-covered, brush-covered, or grass-covered land. Other states or federal areas may have similar laws.

Introduction

Read this information carefully to learn how to operate and maintain your product properly and to avoid injury and product damage. You are responsible for operating the product properly and safely.

You may contact Toro directly at www.Toro.com for product and accessory information, help finding a dealer, or to register your product.

Whenever you need service, genuine Toro parts, or additional information, contact an Authorized Service Dealer or Toro Customer Service and have the model and serial numbers of your product ready. The model and serial numbers are on a plate mounted on the left side of the foot rest. Write the numbers in the space provided.

Model No. _____

Serial No. _____

This manual identifies potential hazards and has safety messages identified by the safety alert symbol (Figure 1), which signals a hazard that may cause serious injury or death if you do not follow the recommended precautions.



Figure 1

1. Safety alert symbol

This manual uses 2 other words to highlight information. **Important** calls attention to special mechanical information and **Note** emphasizes general information worthy of special attention.

Contents

Introduction 2
Safety 4
- Safe Operating Practices 4
- Toro Riding Mower Safety 6
- Sound Pressure Level 7
- Sound Power Level 7
- Vibration Level 7
- Safety and Instructional Decals 8

Setup 13
- 1 Connecting the Battery 13
- 2 Mounting the Hood Latch (CE Units Only) 14
- 3 Replacing the Panel Fasteners (CE Units Only) 15
- 4 Adjusting the Tire Pressure 16
- 5 Installing the Cutting Units 16
- 6 Adjusting the Turf Compensation Spring 18
- 7 Adjusting the Lifted Height of the Outer Front Cutting Units (Enable Position) 19
- 8 Installing Rear Weights 20
- 9 Installing CE Decals 21
- 10 Reading the Manual and Viewing the Safety Video 21

Product Overview 22
- Controls 22
- Specifications 25

Operation 26
- Checking the Engine Oil Level 26
- Checking the Cooling System 27
- Filling the Fuel Tank 27
- Checking the Transmission Fluid 28
- Checking the Hydraulic Fluid Level 28

© 2006—The Toro® Company
8111 Lyndale Avenue South
Bloomington, MN 55420

Contact us at www.Toro.com.
Printed in the USA.
All Rights Reserved

Checking the Rear Axle Lubricant 29
Checking the Reel to Bedknife Contact 30
Check the Torque of the Wheel Nuts 30
Bleeding the Fuel System 30
Starting and Stopping the Engine 31
Setting the Reel Speed 31
Adjusting the Lift Arm Down Pressure 32
Towing the Traction Unit 33
Understanding the Diagnostic Light 34
Diagnostic Ace Display 34
Checking the Interlock Switches 34
Hydraulic Valve Solenoid Functions 38
Operating Tips 38
Maintenance 39
Recommended Maintenance Schedule(s) 39
Daily Maintenance Checklist 41
Service Interval Chart 42
Lubrication 42
Greasing the Bearings and Bushings 42
Engine Maintenance 44
Servicing the Air Cleaner 44
Servicing the Engine Oil and Filter 45
Adjusting the Throttle 45
Fuel System Maintenance 46
Draining the Fuel Tank 46
Checking the Fuel Lines and Connections 46
Draining the Fuel Filter/Water Seperator 46
Replacing the Fuel Filter Canister 47
Replacing the Fuel Prefilter 47
Bleeding Air from the Fuel Injectors 47
Electrical System Maintenance 47
Servicing the Battery 48
Fuses 48
Optional Lighting 48
Drive System Maintenance 49
Adjusting the Traction Drive for Neutral 49
Checking and Adjusting the Traction Linkage 49
Changing the Transmission Fluid 50
Replacing the Transmission Oil Filter 50
Changing the Rear Axle Lubricant 51
Adjusting the Rear Wheel Toe-in 51
Cooling System Maintenance 52
Removing Debris from the Cooling System 52
Brake Maintenance 52
Adjusting the Service Brakes 52
Belt Maintenance 53
Tensioning the Alternator Belt 53
Tensioning the Cooling Fan Belt 53
Hydraulic System Maintenance 54
Changing the Hydraulic Fluid 54
Replacing the Hydraulic Filter 54
Checking the Hydraulic Lines and Hoses 55
Hydraulic System Test Ports 55
Cutting Unit System Maintenance 56
Adjusting the Cutting Unit Lift Rate 56
Backlapping the Cutting Units 57
Storage 59
Preparing the Traction Unit 59
Preparing the Engine 59
Schematics 60

Safety

This machine meets or exceeds CEN standard EN 836:1997, ISO standard 5395:1990, and ANSI B71.4-1999 specifications in effect at time of production, when ballast is installed according to the chart on page 19.

Improper use or maintenance by the operator or owner can result in injury. To reduce the potential for injury, comply with these safety instructions and always pay attention to the safety alert symbol, which means Caution, Warning, or Danger—personal safety instruction. Failure to comply with the instruction may result in personal injury or death.

Safe Operating Practices

The following instructions are from the CEN standard EN 836:1997, ISO standard 5395:1990, and ANSI B71.4-1999.

Training

- Read the operator's manual and other training material carefully. Be familiar with the controls, safety signs, and the proper use of the equipment.
- Never allow children or people unfamiliar with these instructions to use or service the mower. Local regulations may restrict the age of the operator.
- Never mow while people, especially children, or pets are nearby.
- Keep in mind that the operator or user is responsible for accidents or hazards occurring to other people or their property.
- Do not carry passengers.
- All drivers and mechanics should seek and obtain professional and practical instruction. The owner is responsible for training the users. Such instruction should emphasize:
  - the need for care and concentration when working with ride-on machines;
  - control of a ride-on machine sliding on a slope will not be regained by the application of the brake. The main reasons for loss of control are:
    - ◊ insufficient wheel grip;
    - ◊ being driven too fast;
    - ◊ inadequate braking;
    - ◊ the type of machine is unsuitable for its task;
    - ◊ lack of awareness of the effect of ground conditions, especially slopes;
    - ◊ incorrect hitching and load distribution.
- The owner/user can prevent and is responsible for accidents or injuries occurring to himself or herself, other people, or property.

Preparation

- While mowing, always wear substantial footwear, long trousers, hard hat, safety glasses, and ear protection. Long hair, loose clothing, or jewelry may get tangled in moving parts. Do not operate the equipment when barefoot or wearing open sandals.
- Thoroughly inspect the area where the equipment is to be used and remove all objects which may be thrown by the machine.
- **Warning**—Fuel is highly flammable. Take the following precautions:
  - Store fuel in containers specifically designed for this purpose.
  - Refuel outdoors only and do not smoke while refuelling.
  - Add fuel before starting the engine. Never remove the cap of the fuel tank or add fuel while the engine is running or when the engine is hot.
  - If fuel is spilled, do not attempt to start the engine but move the machine away from the area of spillage and avoid creating any source of ignition until fuel vapors have dissipated.
  - Replace all fuel tanks and container caps securely.
- Replace faulty silencers/mufflers.
- Evaluate the terrain to determine what accessories and attachments are needed to properly and safely perform the job. Only use accessories and attachments approved by the manufacturer.
- Check that operator's presence controls, safety switches and shields are attached and

functioning properly. Do not operate unless they are functioning properly.

Operation

- Do not operate the engine in a confined space where dangerous carbon monoxide fumes can collect.
- Mow only in daylight or in good artificial light.
- Before attempting to start the engine, disengage all blade attachment clutches, shift into neutral, and engage the parking brake.
- Remember there is no such thing as a safe slope. Travel on grass slopes requires particular care. To guard against overturning:
  - do not stop or start suddenly when going up or downhill;
  - engage clutch slowly, always keep machine in gear, especially when travelling downhill;
  - machine speeds should be kept low on slopes and during tight turns;
  - stay alert for humps and hollows and other hidden hazards;
  - never mow across the face of the slope, unless the mower is designed for this purpose.
- Stay alert for holes in the terrain and other hidden hazards.
- Use care when pulling loads or using heavy equipment.
  - Use only approved drawbar hitch points.
  - Limit loads to those you can safely control.
  - Do not turn sharply. Use care when reversing.
  - Use counterweight(s) or wheel weights when suggested in the operator's manual.
- Watch out for traffic when crossing or near roadways.
- Stop the blades rotating before crossing surfaces other than grass.
- When using any attachments, never direct discharge of material toward bystanders nor allow anyone near the machine while in operation.
- Never operate the machine with damaged guards, shields, or without safety protective devices in place. Be sure all interlocks are attached, adjusted properly, and functioning properly.
- Do not change the engine governor settings or over-speed the engine. Operating the engine at excessive speed may increase the hazard of personal injury.
- Before leaving the operator's position:
  - stop on level ground;
  - disengage the power take-off and lower the attachments;
  - change into neutral and set the parking brake;
  - stop the engine and remove the key.
- Disengage drive to attachments when transporting or not in use.
- Stop the engine and disengage drive to attachment:
  - before refuelling;
  - before removing the grass catcher/catchers;
  - before making height adjustment unless adjustment can be made from the operator's position.
  - before clearing blockages;
  - before checking, cleaning or working on the mower;
  - after striking a foreign object or if an abnormal vibration occurs. Inspect the mower for damage and make repairs before restarting and operating the equipment.
- Reduce the throttle setting during engine run-out and, if the engine is provided with a shut-off valve, turn the fuel off at the conclusion of mowing.
- Keep hands and feet away from the cutting units.
- Look behind and down before backing up to be sure of a clear path.
- Slow down and use caution when making turns and crossing roads and sidewalks. Stop cylinders/reels if not mowing.
- Do not operate the mower under the influence of alcohol or drugs.
- Use care when loading or unloading the machine into a trailer or truck.
- Use care when approaching blind corners, shrubs, trees, or other objects that may obscure vision.

Maintenance and Storage

- Keep all nuts, bolts and screws tight to be sure the equipment is in safe working condition.
- Never store the equipment with fuel in the tank inside a building where fumes may reach an open flame or spark.
- Allow the engine to cool before storing in any enclosure.
- To reduce the fire hazard, keep the engine, silencer/muffler, battery compartment and fuel storage area free of grass, leaves, or excessive grease.
- Check the grass catcher frequently for wear or deterioration.
- Keep all parts in good working condition and all hardware and hydraulic fittings tightened. Replace all worn or damaged parts and decals.
- If the fuel tank has to be drained, do this outdoors.
- Be careful during adjustment of the machine to prevent entrapment of the fingers between moving blades and fixed parts of the machine.
- On multi-cylinder/multi-reel machines, take care as rotating one cylinder/reel can cause other cylinders/reels to rotate.
- Disengage drives, lower the cutting units, set parking brake, stop engine and remove key and disconnect spark plug wire. Wait for all movement to stop before adjusting, cleaning or repairing.
- Clean grass and debris from cutting units, drives, silencers/mufflers, and engine to help prevent fires. Clean up oil or fuel spillage.
- Use jack stands to support components when required.
- Carefully release pressure from components with stored energy.
- Disconnect battery and remove spark plug wire before making any repairs. Disconnect the negative terminal first and the positive last. Reconnect positive first and negative last.
- Use care when checking the cylinders/reels. Wear gloves and use caution when servicing them.
- Keep hands and feet away from moving parts. If possible, do not make adjustments with the engine running.
- Charge batteries in an open well ventilated area, away from spark and flames. Unplug charger before connecting or disconnecting from battery. Wear protective clothing and use insulated tools.

Toro Riding Mower Safety

The following list contains safety information specific to Toro products or other safety information that you must know that is not included in the CEN, ISO, or ANSI standard.

This product is capable of amputating hands and feet and throwing objects. Always follow all safety instructions to avoid serious injury or death.

Use of this product for purposes other than its intended use could prove dangerous to user and bystanders.



Engine exhaust contains carbon monoxide, which is an odorless, deadly poison that can kill you.

Do not run engine indoors or in an enclosed area.

- Know how to stop the engine quickly.
- Do not operate the machine while wearing tennis shoes or sneakers.
- Wearing safety shoes and long pants is advisable and required by some local ordinances and insurance regulations.
- Handle fuel carefully. Wipe up any spills.
- Check the safety interlock switches daily for proper operation. If a switch should fail, replace the switch before operating the machine. After every two years, replace all four interlock switches in the safety system, whether they are working properly or not.
- Before starting the engine, sit on the seat.
- Using the machine demands attention. To prevent loss of control:

  - Do not drive close to sand traps, ditches, creeks, or other hazards.
  - Reduce speed when making sharp turns. Avoid sudden stops and starts.
  - When near or crossing roads, always yield the right-of-way.
  - Apply the service brakes when going downhill to keep forward speed slow and to maintain control of the machine.
- The grass baskets must be in place during operation of the cylinders/reels or thatchers for maximum safety. Shut the engine off before emptying the baskets.
- Raise the cutting units when driving from one work area to another.
- Do not touch the engine, silencer/muffler, or exhaust pipe while the engine is running or soon after it has stopped because these areas could be hot enough to cause burns.
- Stay clear of the rotating screen at the side of the engine to prevent direct contact with your body or clothing.
- If the engine stalls or loses headway and cannot make it to the top of a slope, do not turn the machine around. Always back slowly, straight down the slope.
- When a person or pet appears unexpectedly in or near the mowing area, stop mowing. Careless operation, combined with terrain angles, ricochets, or improperly positioned guards can lead to thrown object injuries. Do not resume mowing until the area is cleared.

Maintenance and Storage

- Make sure all hydraulic line connectors are tight and all hydraulic hoses and lines are in good condition before applying pressure to the system.
- Keep your body and hands away from pin hole leaks or nozzles that eject hydraulic fluid under high pressure. Use paper or cardboard, not your hands, to search for leaks. Hydraulic fluid escaping under pressure can have sufficient force to penetrate the skin and cause serious injury. Seek immediate medical attention if fluid is injected into skin.
- Before disconnecting or performing any work on the hydraulic system, all pressure in the system must be relieved by stopping the engine and lowering the cutting units and attachments to the ground.
- Check all fuel lines for tightness and wear on a regular basis. Tighten or repair them as needed.
- If the engine must be running to perform a maintenance adjustment, keep hands, feet, clothing, and any parts of the body away from the cutting units, attachments, and any moving parts, especially the screen at the side of the engine. Keep everyone away.
- To ensure safety and accuracy, have an Authorized Toro Distributor check the maximum engine speed with a tachometer. Maximum governed engine speed should be 2900 RPM.
- If major repairs are ever needed or if assistance is desired, contact an Authorized Toro Distributor.
- Use only Toro-approved attachments and replacement parts. The warranty may be voided if used with unapproved attachments.

Sound Pressure Level

This unit has an equivalent continuous A-weighted sound pressure at the operator ear of: 88 dB(A), based on measurements of identical machines per EN 11094 and EN 836.

Sound Power Level

This unit has a guaranteed sound power level of: 105 dBA/1 pW, based on measurements of identical machines per EN 11094.

Vibration Level

This unit does not exceed a vibration level of 2.5 m/s^2 at the hands based on measurements of identical machines per EN 1033.

This unit does not exceed a vibration level of 0.5 m/s^2 at the posterior based on measurements of identical machines per EN 1032.

Safety and Instructional Decals

Safety decals and instructions are easily visible to the operator and are located near any area of potential danger. Replace any decal that is damaged or lost.

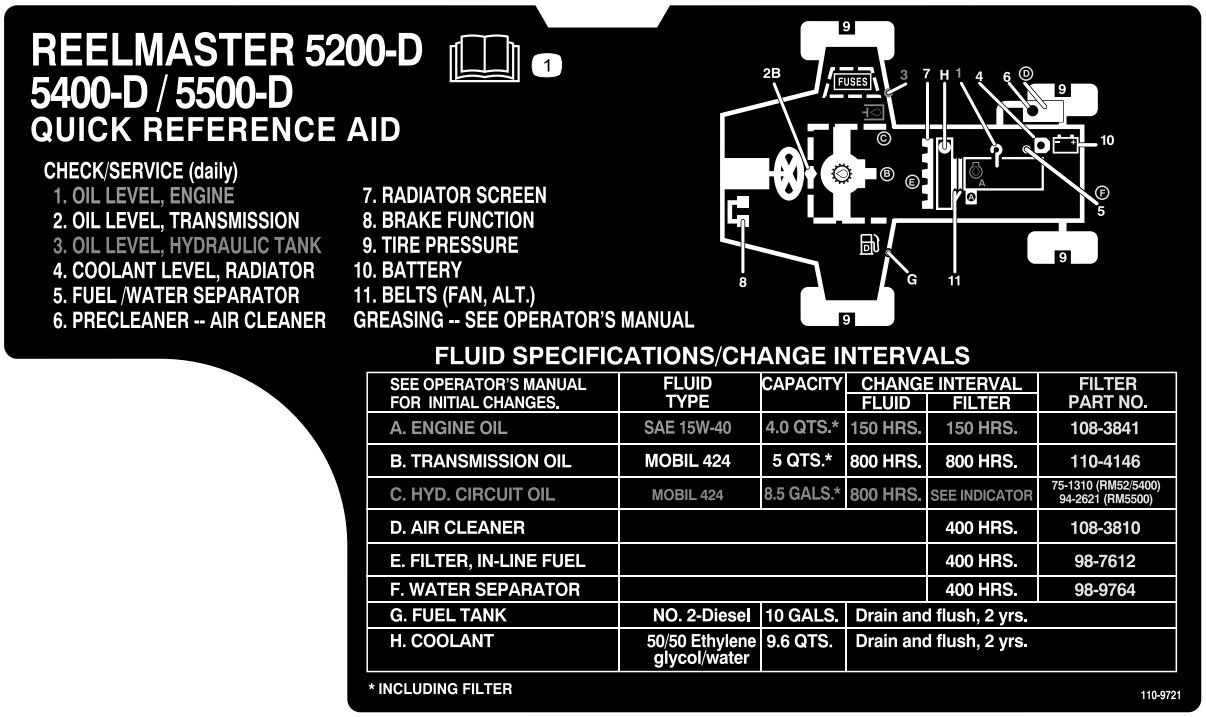

110-9721

1. Read the *Operator's Manual.*

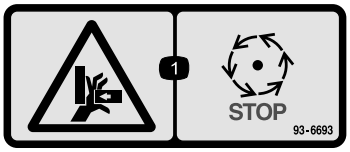

93-6693

1. Crushing hazard of hand—wait for moving parts to stop.



104-2052

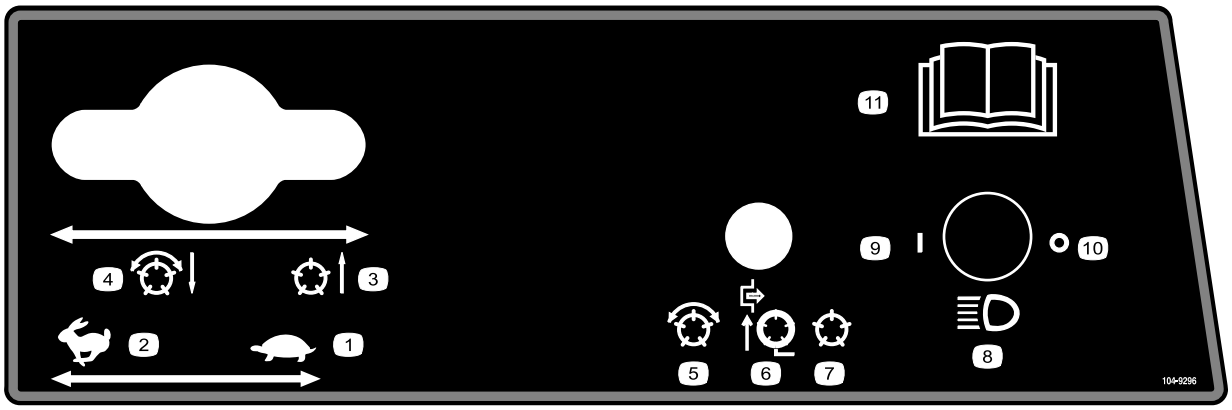

104-9296

1. Throttle—slow
2. Throttle—fast
3. Reels raised and off
4. Reels lowered and on when enabled—forward and backlap
5. Reels enabled
6. Reels disabled—lift only
7. Reels disabled—lift and lower
8. Headlights (optional)
9. Headlights—On
10. Headlights—Off
11. Read the *Operator's Manual* for further instructions.



104-9298

1. Read the *Operator's Manual*.

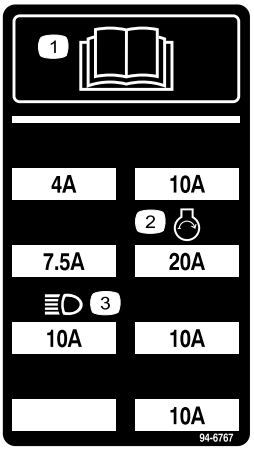

94-6767

1. Read the *Operator's Manual.*
2. Headlights
3. Engine—start

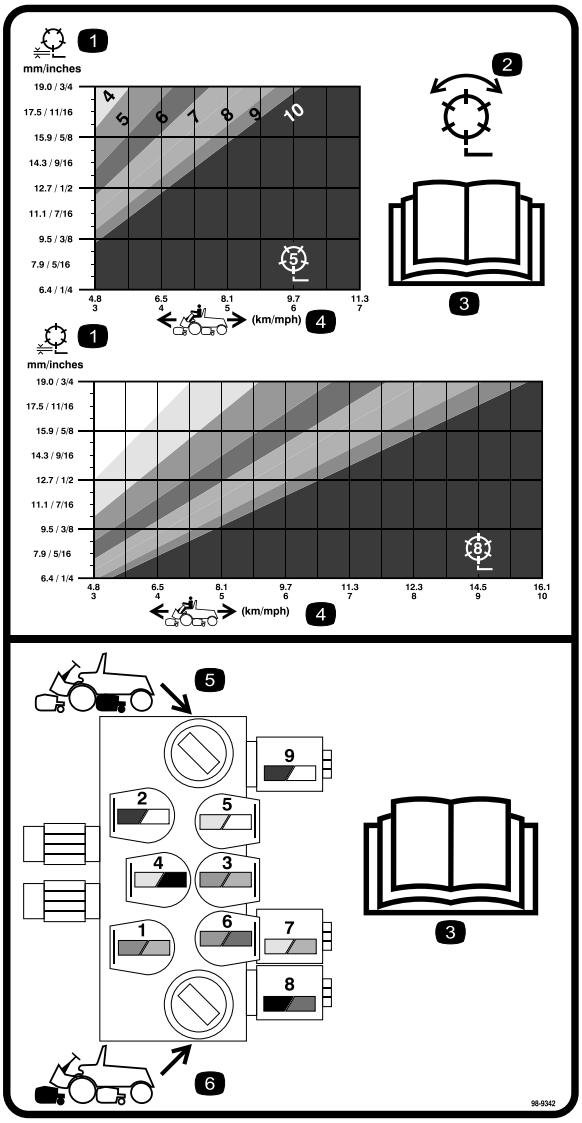

98-9342

1. Reel—height of cut
2. Reel—mow and backlap
3. Read the *Operator's Manual.*
4. Machine speed
5. Rear reels circuit controls
6. Front reels circuit controls

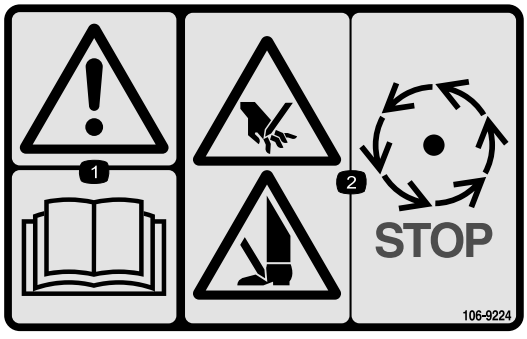

106-9224

1. Warning—read the Operator's Manual.
2. Cutting hazard of hand and foot—stop the reels before touching.



93-6697

1. Read the *Operator's Manual*.
2. Add SAE 80w-90 (API GL-5) oil every 50 hours.

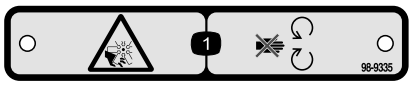

98-9335

1. Cutting/dismemberment hazard, fan—stay away from moving parts.

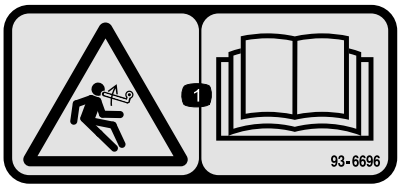

93-6696

1. Stored energy hazard—read the *Operator's Manual*.

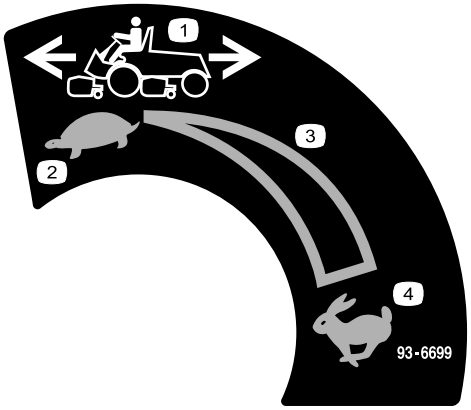

93-6699

1. Machine speed
2. Slow
3. Continuous variable setting
4. Fast



93-6691

1. Read the *Operator's Manual.*

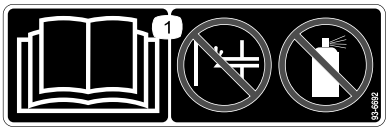

93-6692

1. Read the *Operator's Manual*—do not prime or use starting fluid.

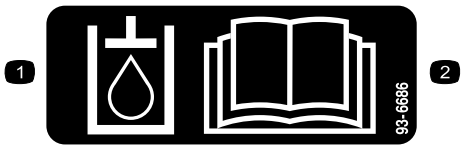

93-6686

1. Hydraulic oil
2. Read the *Operator's Manual.*

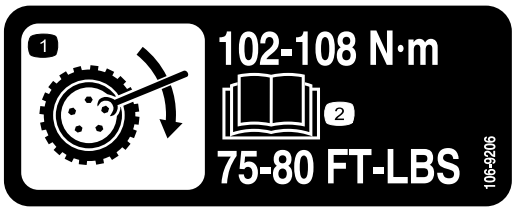

106-9206

1. Wheel torque specifications
2. Read the *Operator's Manual*.

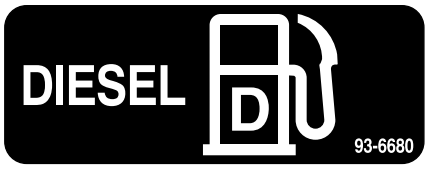

93-6680

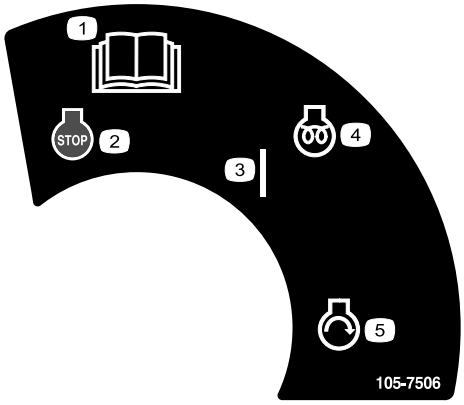

105-7506

1. Read the *Operator's Manual.*
2. Engine—stop
3. On
4. Engine—preheat
5. Engine—start

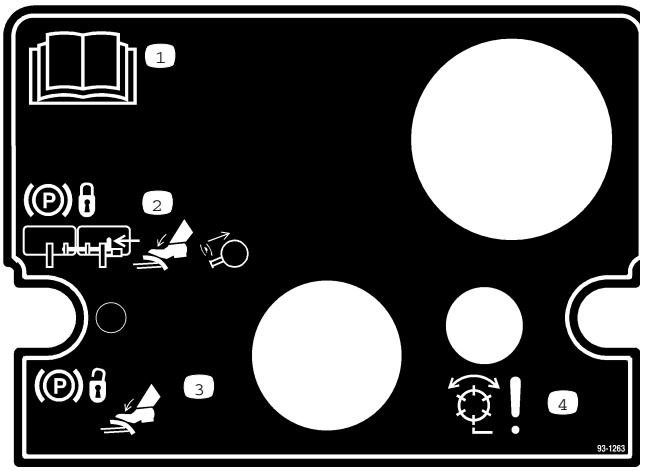

93-1263

1. Read the *Operator's Manual.*
2. To engage the parking brake, connect the brake pedals with the locking pin, push down on both pedals, and pull the brake latch out.
3. To release the parking brake, press both pedals until the parking brake latch retracts.
4. Danger—reels enabled.

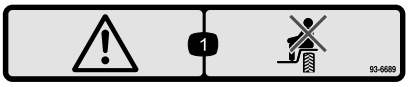

93-6689

1. Warning—do not carry passengers.



Battery Symbols

Some or all of these symbols are on your battery

1. Explosion hazard
2. No fire, open flame, or smoking.
3. Caustic liquid/chemical burn hazard
4. Wear eye protection
5. Read the *Operator's Manual.*
6. Keep bystanders a safe distance from the battery.
7. Wear eye protection; explosive gases can cause blindness and other injuries
8. Battery acid can cause blindness or severe burns.
9. Flush eyes immediately with water and get medical help fast.
10. Contains lead; do not discard.

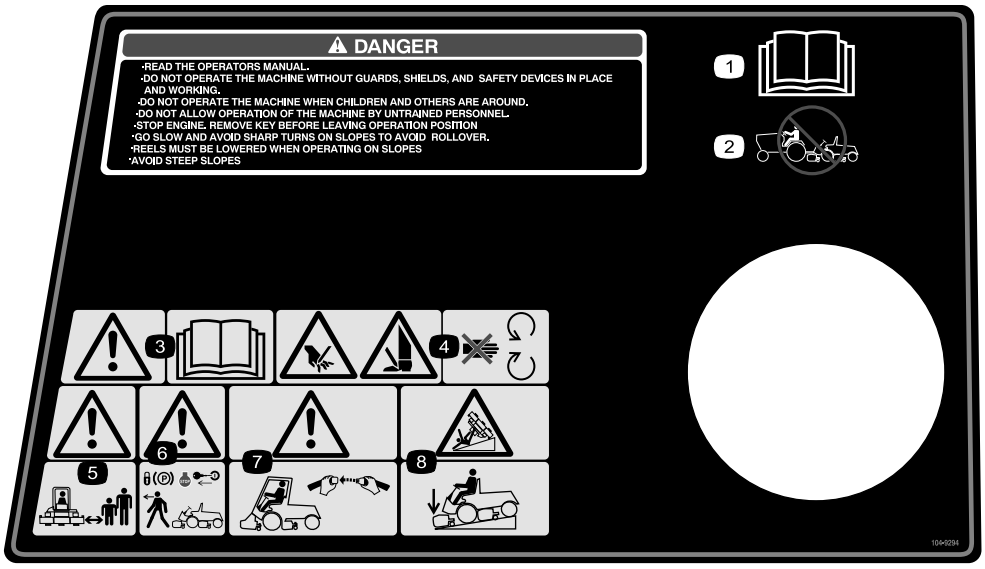

104-9294

1. Read the *Operator's Manual*.
2. Do not tow the machine.
3. Warning—Read the *Operator's Manual*.
4. Cutting hazard of hand or foot—stay away from moving parts.
5. Warning—keep bystanders a safe distance from the machine.
6. Warning—lock the parking brake, stop the engine, and remove the ignition key before leaving the machine.
7. Warning—use a rollover protection system and wear the seat belt.
8. Tipping hazard—lower the cutting unit when driving down slopes.

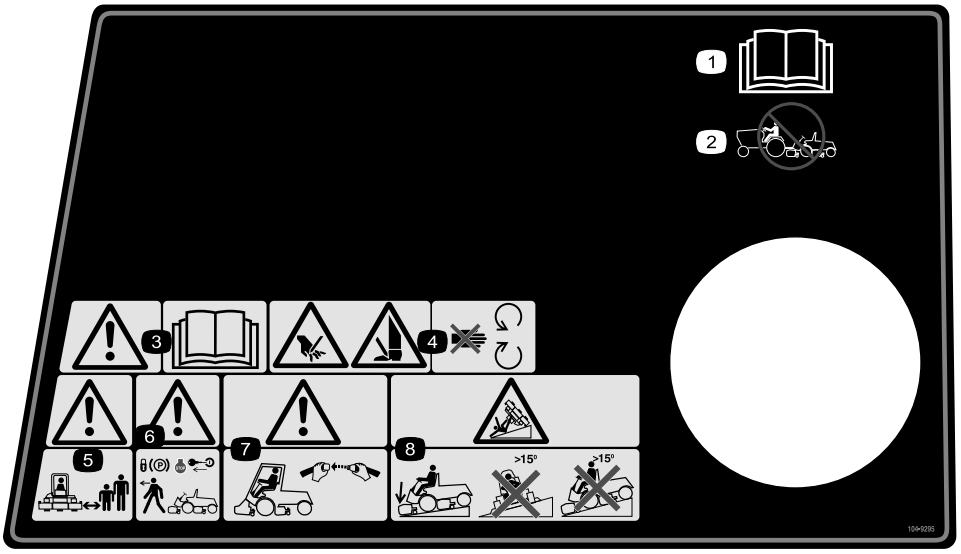

104-9295

(Cover 104–9296 for CE)

1. Read the *Operator's Manual*.
2. Do not tow the machine.
3. Warning—Read the *Operator's Manual*.
4. Cutting hazard of hand or foot—stay away from moving parts.
5. Warning—keep bystanders a safe distance from the machine.
6. Warning—lock the parking brake, stop the engine, and remove the ignition key before leaving the machine.
7. Warning—use a rollover protection system and wear the seat belt.
8. Tipping hazard—lower the cutting unit when driving down slopes and do not drive across or down slopes greater than 15 degrees.

Setup

Loose Parts

Use the chart below to verify that all parts have been shipped.

Step	Description	Qty.	Use
1	No parts required	–	Connect the Battery
2	Locking hood switch Lock washer Nut Key Hood latch bracket Bolt (1/4 x 3/4 inch) Flat washer (1/4 inch) Locknut (1/4 inch)	1 1 1 2 1 2 2 2	Mount the hood latch.
3	Flange-head bolt (5/16 x 5/8 inch) Flange-head bolt (5/16 x 3/4 inch)	1 1	Replace the panel fasteners (CE only).
4	No parts required	–	Adjust the tire pressure.
5	Cutting unit (sold separately)	5	Install the cutting units
6	No parts required	–	Adjust the turf compensation spring.
7	No parts required	–	Adjust the lifted height of the outer front cutting units (enable position).
8	Rear weights (size varies with configuration).	Varies	Install rear weights.
9	CE decal Blank service decal	1 1	Install the CE Decals
10	Operator's Manual Engine Operator's Manual Parts Catalog CE certificate Safety Video Diagnostic ACE display overlay	1 1 1 2 1 1	Read the Operator's Manual and watch the video before operating the machine.

Note: Determine the left and right sides of the machine from the normal operating position.

Step 1

Connecting the Battery

No Parts Required

Procedure

Warning

CALIFORNIA
Proposition 65 Warning

Battery posts, terminals, and related accessories contain lead and lead compounds, chemicals known to the State of California to cause cancer and reproductive harm. Wash hands after handling.

Connecting cables to the wrong post could result in personal injury and/or damage to the electrical system.

1. Open hood.
2. Ensure that the battery is securely fastened in place and check the battery charge with a hydrometer. If the battery needs charging, ensure that the positive (+) cable is disconnected from the battery before connecting the charger (Figure 2).

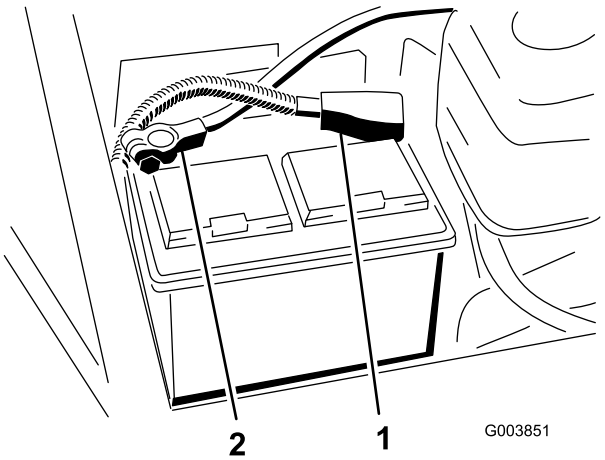

Figure 2

1. Positive battery cable
2. Negative battery cable

Charging the battery produces gasses that can explode.

Never smoke near the battery and keep sparks and flames away from the battery.

Battery terminals or metal tools could short against metal tractor components, causing sparks. Sparks can cause the battery gasses to explode, resulting in personal injury.

- **When removing or installing the battery, do not allow the battery terminals to touch any metal parts of the tractor.**
- **Do not allow metal tools to short between the battery terminals and metal parts of the tractor.**

3. Slide the red, positive battery cable onto the positive battery post and tighten the nut securely.

Incorrect battery cable routing could damage the tractor and cables, causing sparks. Sparks can cause the battery gasses to explode, resulting in personal injury.

- **Always disconnect the negative (black) battery cable before disconnecting the positive (red) cable.**
- **Always connect the positive (red) battery cable before connecting the negative (black) cable.**

4. Slide the black, negative battery cable onto the negative battery post and tighten the nut securely.
5. Coat both battery connections with Grafo 112X (skin over) grease (Toro Part No. 505-47), petroleum jelly, or light grease to prevent corrosion and slide the rubber boot over the positive terminal.
6. Close the hood.

Step
2

Mounting the Hood Latch (CE Units Only)

Parts needed for this step:

1	Locking hood switch
1	Lock washer
1	Nut
2	Key
1	Hood latch bracket
2	Bolt (1/4 x 3/4 inch)
2	Flat washer (1/4 inch)
2	Locknut (1/4 inch)

Procedure

1. Remove the plug from the hole in the left front corner of the hood (Figure 3).

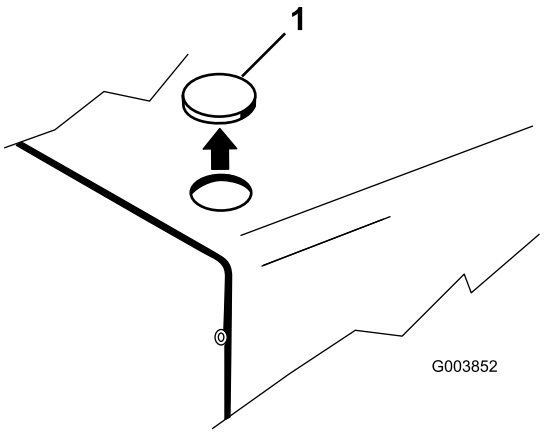

Figure 3

1. Hood plug

2. Open the hood.
3. Mount the locking switch to the hood with a lock washer and nut. Position the switch with the latch toward the front of the machine (Figure 4).

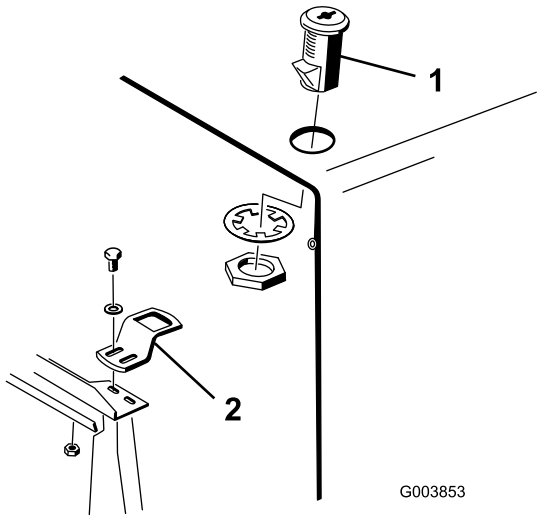

Figure 4

1. Locking switch 2. Latch bracket

4. Loosely mount the latch bracket to the radiator support with 2 bolts (1/4 x 3/4 inch), flat washers, and locknuts (Figure 4).
5. Adjust the latch bracket, until it is aligned with the switch latch, then tighten the bolts.
6. Rotate the latch to the locked and unlocked positions with the key. Remove the key and store it in a memorable place.
7. Close the hood.

Step
3

Replacing the Panel Fasteners (CE Units Only)

Parts needed for this step:

1	Flange-head bolt (5/16 x 5/8 inch)
1	Flange-head bolt (5/16 x 3/4 inch)

Procedure

1. Remove the fasteners securing the left front corner of the floor panel and the left end of the access panel to the frame (Figure 5).

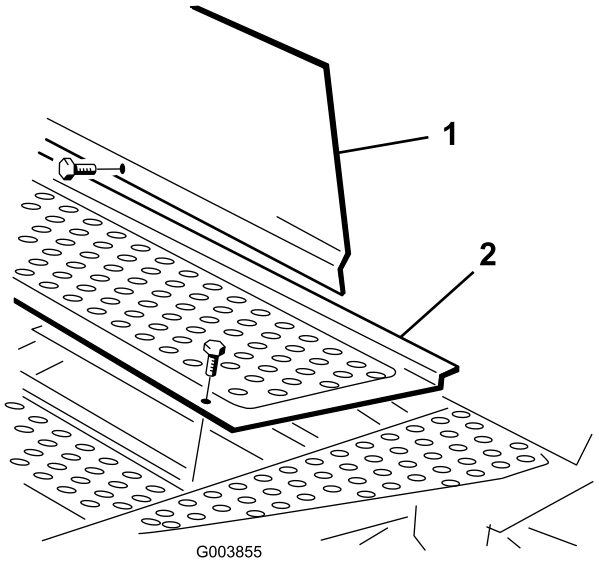

Figure 5

1. Floor panel
2. Access panel

2. Replace the floor panel fastener with a flange-head bolt (5/16 x 5/8 inch) supplied in loose parts (Figure 5).
3. Replace the access panel fastener with a flange-head bolt (5/16 x 3/4 inch) supplied in loose parts (Figure 5).

Step 4

Adjusting the Tire Pressure

No Parts Required

Procedure

The tires are over-inflated for shipping. Therefore, release some of the air to reduce the pressure. Correct air pressure in the front and rear tires is 10 to 15 psi (69 to 103 kPa).

Important: Maintain even pressure in all tires to ensure uniform contact with the turf.

Step 5

Installing the Cutting Units

Parts needed for this step:

5	Cutting unit (sold separately)

Procedure

1. Remove the cutting units from the cartons. Assemble and adjust the as described in the cutting unit *Operator's Manual.*
2. If you will be using baskets on the cutting units, use the chart below (Figure 6) to determine the locations at which you need to mount basket guides to the cutting unit carrier frames. If you will not be using baskets, proceed to step 4.

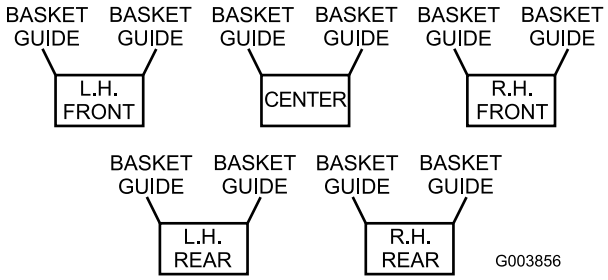

Figure 6

3. Mount a basket guide (Figure 7) to the appropriate side of each cutting unit carrier frame (Figure 8) with a bolt (5/16 x 1-3/4 inches), flat washer, and lock washer or fasteners previously removed, as shown in Figure 7.

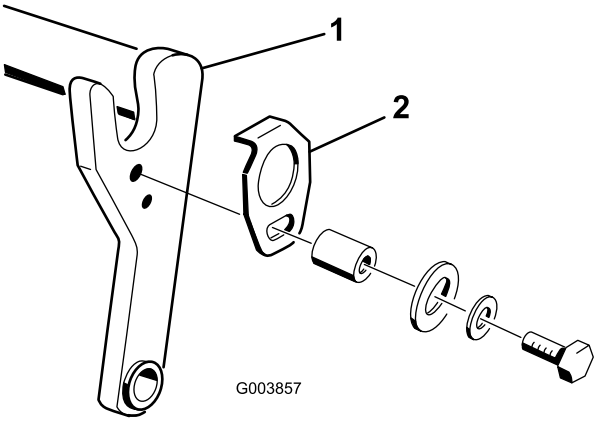

Figure 7

1. Carrier frame
2. Basket guide

4. Install a roll pin (Figure 8) into the hole in the appropriate side of each cutting unit carrier frame (Figure 6).

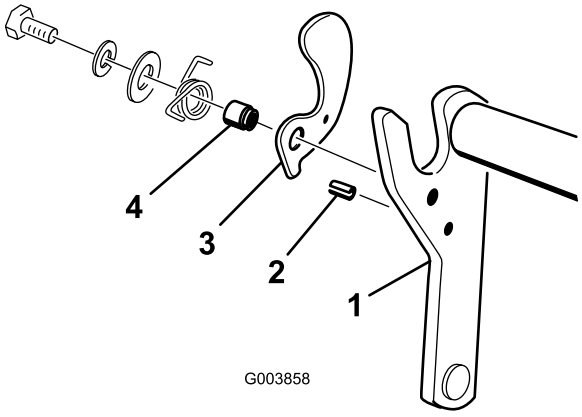

Figure 8

1. Carrier frame
2. Roll pin
3. Basket bracket
4. Basket collar

5. Align the mounting shaft of the cutting unit with the pivot tube on the carrier frame. Insert the shaft into the tube (Figure 9).

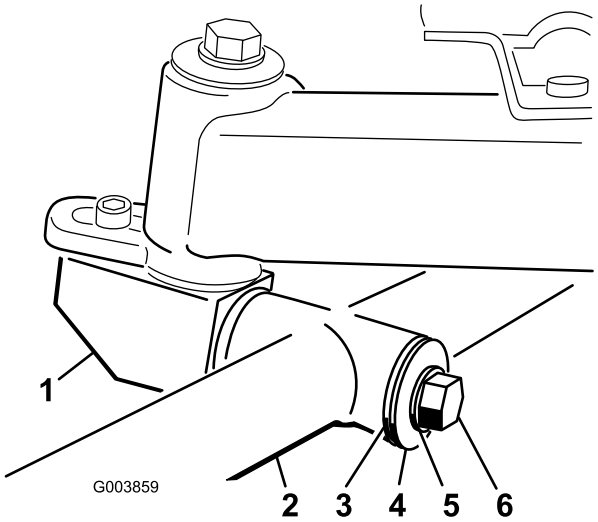

Figure 9

1. Cutting unit mounting shaft
2. Carrier frame pivot tube
3. Thrust washer
4. Flat washer
5. Lock washer
6. Bolt

6. Secure the shaft in the pivot tube with a thrust washer, flat washer, lock washer, and bolt (Figure 9).

7. Assemble the mounting nuts for the reel drive motor to each cutting unit (Figure 10). Leave approximately 1/2 inch (1.25 cm) of threads exposed on each mounting stud.

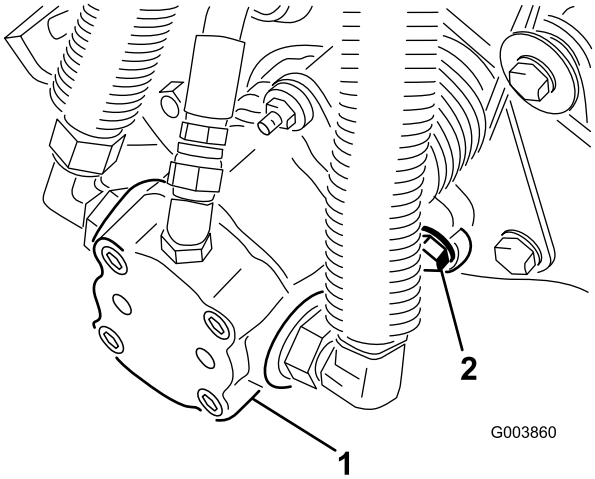

Figure 10

1. Reel drive motor
2. Mounting nuts

8. Coat the spline shaft of the motor with clean grease and install the motor by rotating it clockwise so that the motor flanges clear the studs. Rotate the motor counterclockwise until the flanges encircle the studs and tighten the

mounting nuts. Ensure that the washers are against the nuts.

9. Detach the lock-up chain from the lift arm and secure it to the cross tube on each rear cutting unit with a bolt, flat washer, and locknut (Figure 11).

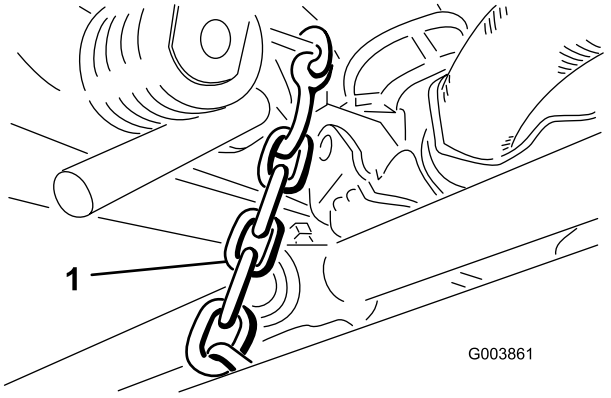

Figure 11

1. Lock-up chain

Important: Make sure that all hydraulic hoses are routed away from cutting unit so that when the cutting unit pivots excessive rubbing does not occur.

10. Check the adjustment of the lock-up rollers (Figure 12). When properly adjusted, they will contact the lock-up levers on rear lift arms and support the cutting units when fully raised.

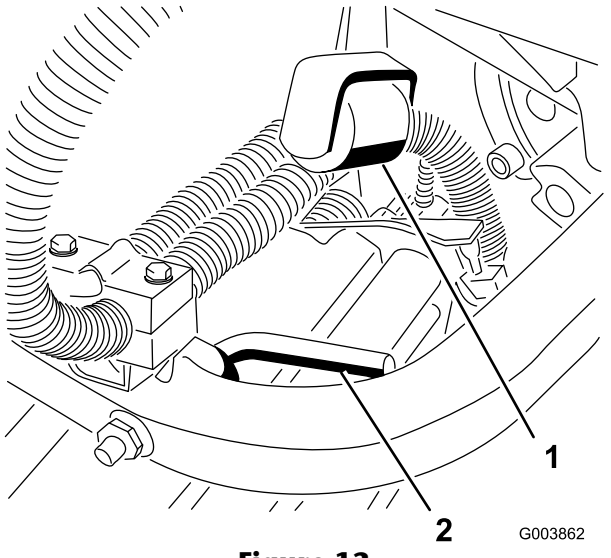

Figure 12

1. Lock-up rollers
2. Lock-up levers

---

11. Mount a basket to each cutting unit carrier frame by inserting the basket mounting pin into the basket bracket and pressing the opposite mounting pin into the pivoting bracket.

Step 6

Adjusting the Turf Compensation Spring

No Parts Required

Procedure

Important: This adjustment is needed for Cutting Unit Models 03527 and 03528 only.

The turf compensation spring (Figure 13), connecting carrier frame to cutting unit, controls the amount of fore-aft rotation available.

The turf compensation spring also transfers weight from the front to the rear roller. (This helps to reduce a wave pattern in the turf, also known as bobbing.)

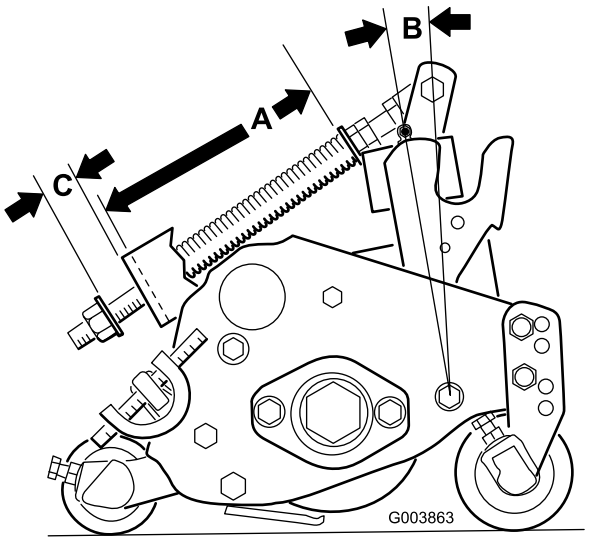

Figure 13

Important: Make spring adjustments with the cutting unit mounted to the traction unit and lowered to the shop floor.

1. Tighten the locknut on the rear of the spring rod until the gap (C) between the rear of the

spring bracket and front of the washer is 1.25 inches (3.2 cm) (Figure 13).

2. Tighten the hex nuts on the front end of the spring rod until the compressed length (A) of spring is 6.25 inches (32.8 cm) (Figure 13).

   As the compressed spring length (A) **decreases**, weight transfer from the front roller to the rear roller **increases** and the carrier frame/cutting unit rotation angle (B) **decreases**.

   As the gap (C) between the spring bracket and washer **increases**, the carrier frame/cutting unit rotation angle (B) **increases**.

Step 7

Adjusting the Lifted Height of the Outer Front Cutting Units (Enable Position)

No Parts Required

Procedure

The turnaround height of the front outer cutting units (#4 & #5) may be increased to provide additional ground clearance on contoured fairways.

Note: The RM CONFIG time delay should not be changed from the original setting of 0 when using this method to adjust turn around height.

To increase the turn around height of the front cutting units proceed as follows:

1. Position the machine on a level surface, lower the cutting units, and stop the machine.
2. Loosen the carriage bolt nut securing the lift arm switch bracket to the No. 4 lift arm (left front) (Figure 14).

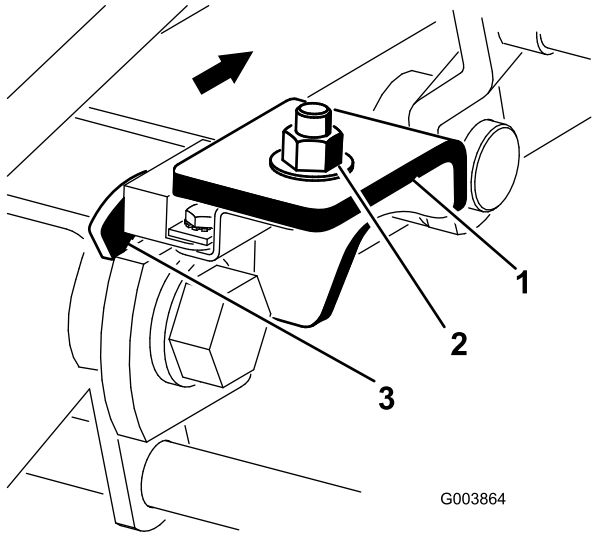

Figure 14

1. Lift arm switch
2. Carriage bolt nut
3. Lift arm flag

3. Move the lift switch bracket inward in the slot until the desired position is attained.
4. Set the distance between the lift arm switch and the flag on the lift arm to approximately 0.062 inches (1.6 mm).
5. Tighten the carriage bolt nut.

Step
8

Installing Rear Weights

Parts needed for this step:

Varies	Rear weights (size varies with configuration).

Procedure

The Reelmaster 5200-D & 5400-D Traction Units comply with CEN standard EN 836:1997, ISO standard 5395:1990, and ANSI B71.4-1999 Standards when equipped with rear weights and 90 lb of calcium chloride ballast is added to rear wheels. Use the chart below to determine the combinations of weights required for your configuration. Order parts from your local Authorized Toro Distributor.

Traction Unit Configuration	Rear Weight Required	Weight Part Number	Weight Description	Qty
2wd Traction Unit with ROPS w/o baskets	291 lb (132 kg)	75-6690	Rear Weight Kit	3
2wd Traction Unit with ROPS with baskets	358 lb (162 kg)	75-6690	Rear Weight Kit	4
2wd Traction Unit w/o ROPS w/o baskets	157 lb (71 kg)	75-6690	Rear Weight Kit	1
2wd Traction Unit w/o ROPS with baskets	224 lb (102 kg)	75-6690	Rear Weight Kit	2
4wd Traction Unit with ROPS w/o baskets	157 lb (71 kg)	75-6690	Rear Weight Kit	1
4wd Traction Unit with ROPS with baskets	249 lb (113)	75-6690 and 98-9780	Rear Weight Kit and Rear Weight Kit—25 lb	2 and 1

Important: If a puncture occurs in a tire with calcium chloride, remove the machine from the turf area as quickly as possible. To prevent possible damage to the turf, immediately soak the affected area with water.

Step
9

Installing CE Decals

Parts needed for this step:

1	CE decal
1	Blank service decal

Procedure

1. Place the CE decal onto the traction unit near the model and serial number plate.
2. Place the blank service decal near the English service decal and write the service information into the blank form in the appropriate language using a permanent marker.

Step
10

Reading the Manual and Viewing the Safety Video

Parts needed for this step:

1	*Operator's Manual*
1	*Engine Operator's Manual*
1	*Parts Catalog*
2	CE certificate
1	Safety Video
1	Diagnostic ACE display overlay

Procedure

- Read the *Operator's Manual.*
- View the safety video.
- Store all documentation in a safe place for future use.
- Fill out the registration card.
- Use the diagnostic ACE display overlay when troubleshooting problems with the machine (store it in the service shop until needed).

Product Overview

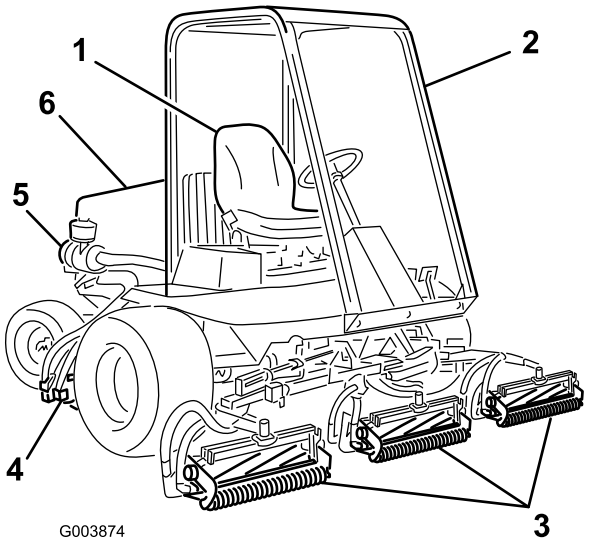

Figure 15

1. Operator's seat
2. Rollover protection system (ROPS), along with the seat belt
3. Front cutting units
4. Rear cutting units
5. Air cleaner
6. Engine hood

Controls

Seat Controls

The seat adjusting lever (Figure 16) allows you to adjust the seat 4 inches fore and aft. The seat adjusting knob (Figure 16) adjusts the seat for the operator's weight. To adjust the seat fore and aft, pull the lever on the left side of the seat assembly outward. After moving the seat to the desired location, release the lever to lock the seat into position. To adjust for the operator's weight, turn the spring tension knob clockwise to increase tension or counterclockwise to decrease tension.

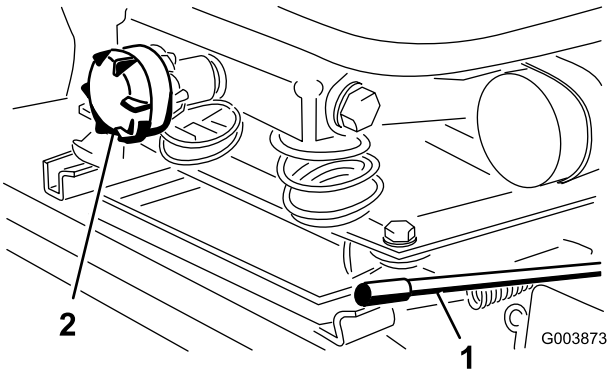

Figure 16

1. Seat adjusting lever
2. Seat adjusting knob

Traction Pedal

The traction pedal (Figure 17) controls forward and reverse operation. Press the top of the pedal to move forward and the bottom to move rearward. Ground speed depends on how far you press the pedal. For no load, maximum ground speed, fully press the pedal while the throttle is in the Fast position.

To stop, reduce foot pressure on the traction pedal and allow it to return to the center position.

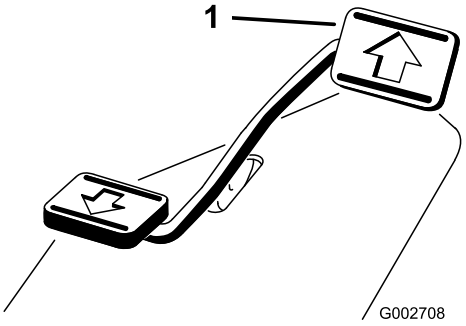

Figure 17

1. Traction pedal

Traction Speed Limiter

Preset this lever (Figure 18) to limit the amount the traction pedal can be pressed in the forward direction to maintain a constant mowing speed.

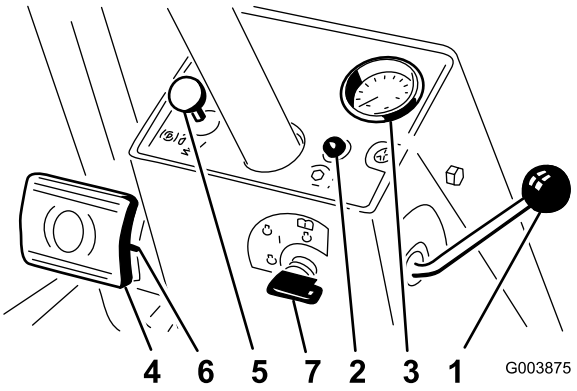

Figure 18

1. Traction speed limiter
2. Reel control light
3. Speedometer
4. Brake pedals
5. Parking brake latch
6. Locking pin
7. Key switch

Reel Control Light

This light (Figure 18) illuminates when the glow plugs are preheating, or blinks when there is a control system problem or when the ground speed during mowing approaches the maximum preset mowing speed.

Speedometer

The speedometer (Figure 18) indicates the ground speed at which machine is traveling.

Brake Pedals

Two foot pedals (Figure 18) operate individual wheel brakes for turning assistance, parking, and to aid in obtaining better side-hill traction. A locking pin connects the pedals for parking brake operation and transport.

Parking Brake Latch

A knob on the left side of console (Figure 18) actuates the parking brake lock. To engage the parking brake, connect the pedals with the locking pin, push down on both pedals, and pull the parking brake latch out. To release parking brake, press both pedals until the parking brake latch retracts.

Key Switch

The key switch (Figure 18) has three positions: Off, On/Preheat, and Start.

Engine Coolant Temperature Warning Light

This light (Figure 19) illuminates and the engine shuts down when the engine coolant reaches a dangerously high temperature.

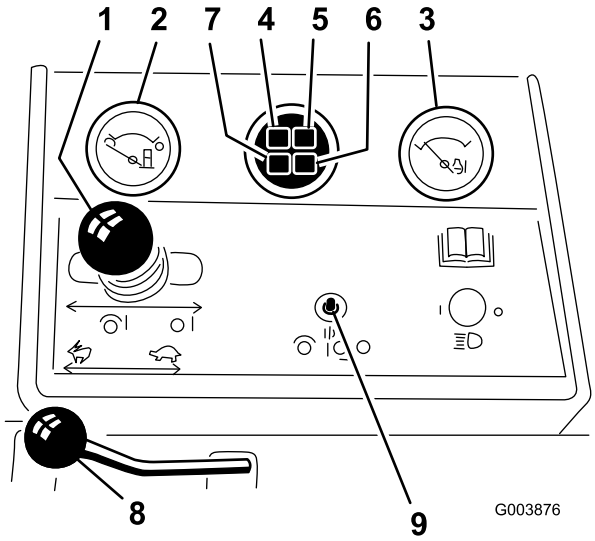

Figure 19

1. Lower mow/raise control lever
2. Fuel gauge
3. Engine coolant temperature gauge
4. Engine oil pressure warning light
5. Engine coolant temperature warning light
6. Glow plug indicator light
7. Charge indicator
8. Throttle control
9. Enable/disable switch

Throttle Control

Move the throttle control (Figure 19) forward to increase the engine speed and rearward to decrease speed.

Fuel Gauge

The fuel gauge (Figure 19) shows the amount of fuel in the tank.

Lower Mow/Raise Control Lever

This lever (Figure 19) raises and lowers the cutting units and also starts and stops the reels.

Glow Plug Indicator Light

This light (Figure 19) blinks when the glow plugs are preheating.

Engine Oil Pressure Warning Light

This light (Figure 19) indicates dangerously low engine oil pressure.

Charge Indicator

The charge indicator (Figure 19) illuminates when the system charging circuit malfunctions.

Enable/Disable Switch

Use the enable/disable switch (Figure 19) in conjunction with the lower mow/raise control lever to operate the reels. The reels can be raised but not lowered when in the mid position.

Backlap Switch

Use the backlap switch (Figure 20) in conjunction with the lower mow/raise control lever for backlapping the reels.

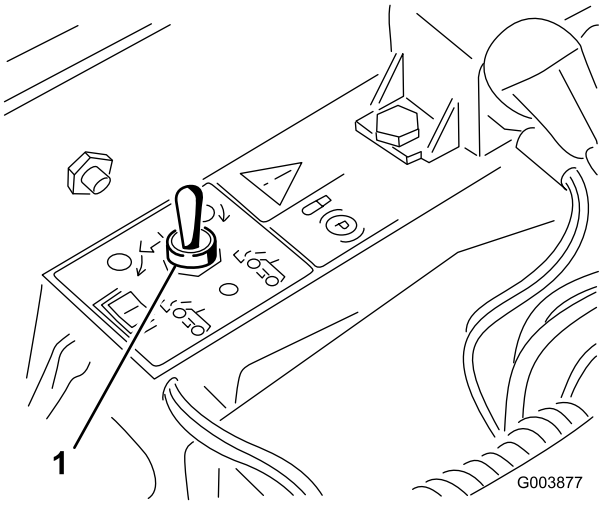

Figure 20

1. Backlap switch

Reel Speed Controls

The reel speed controls (Figure 21) control the speed of front and rear cutting units. The first position is for backlapping. The remaining positions are for mowing operations.

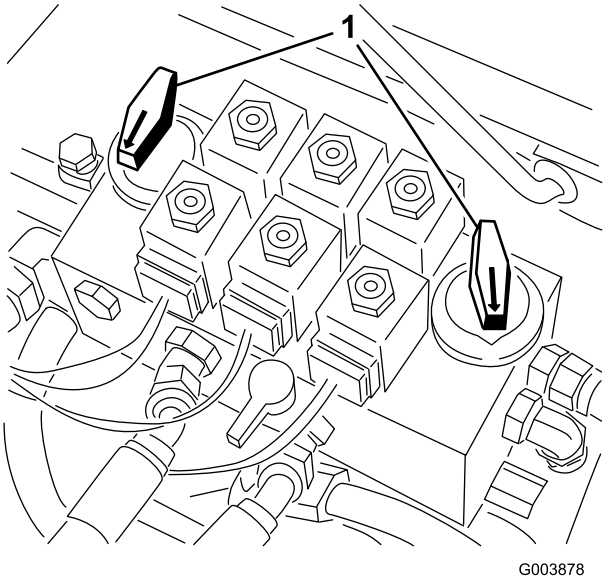

Figure 21

1. Reel speed controls

Hour Meter

The hour meter (Figure 22) shows the total hours that the machine has been operated.

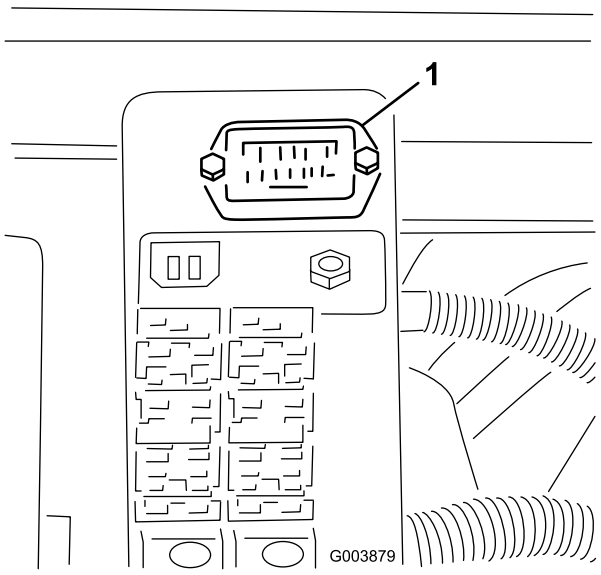

Figure 22

1. Hour meter

Specifications

Note: Specifications and design are subject to change without notice.

Width of Cut	95 inches (241.3 cm)
Transport Width	87 inches (221 cm)
Width, to the Outside of the Front Tires	87 inches (221 cm)
Width, to the Outside of the Rear Tires	52-1/2 inches (133 cm)
Length, without Grass Baskets	103-1/2 inches (263 cm)
Length, with Grass Baskets	116 inches (294.6 cm)
Height, without ROPS Installed	56-1/2 inches (143.5 cm)
Height, with ROPS Installed	85 inches (216 cm)
Height of Cut, 5 Blade Cutting Units	1/2 to 3/4 inches (13 to 19 mm)
Height of Cut, 8 Blade Cutting Units	1/4 to 5/8 inches (6 to 16 mm)
Weight, Models 03540 and 03543, with 8 Blade Cutting Units, Baskets, and Full Fluid Levels	2320 lb (1053 kg)
Weight, Model 03544, with 8 Blade Cutting Units, Baskets, and Full Fluid Levels	2675 lb (1214 kg)

Attachments/Accessories

A selection of Toro approved attachments and accessories are available for use with the machine to enhance and expand its capabilities. Contact your Authorized Service Dealer or Distributor or go to www.Toro.com for a list of all approved attachments and accessories.

Operation

Note: Determine the left and right sides of the machine from the normal operating position.

If you leave the key in the ignition switch, someone could accidently start the engine and seriously injure you or other bystanders.

Remove the key from the ignition switch and lower the cutting units to the ground before servicing or making adjustments to the machine.

Checking the Engine Oil Level

The engine is shipped with oil in the crankcase; however, the oil level must be checked before and after the engine is first started.

Crankcase capacity is approximately 4 qt (2.8 l) with the filter.

Use high-quality engine oil that meets the following specifications:

- API Classification Level Required: CH-4, CI-4 or higher
- Preferred oil: SAE 15W-40 (above 0_F)
- Alternate oil: SAE 10W-30 or 5W-30 (all temperatures)

Toro Premium Engine oil is available from your distributor in either 15W-40 or 10W-30 viscosity. See the parts catalog for part numbers.

1. Park the machine on a level surface, stop the engine, and remove the key from the ignition switch.
2. Open the hood.
3. Remove the dipstick, wipe it clean, and install it (Reelmaster 5200—Figure 23, Reelmaster 5400—Figure 24).

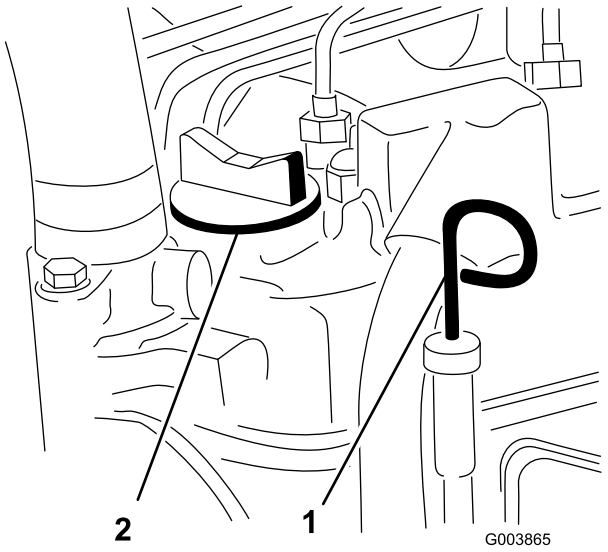

Figure 23

Reelmaster 5200

1. Dipstick
2. Oil fill cap

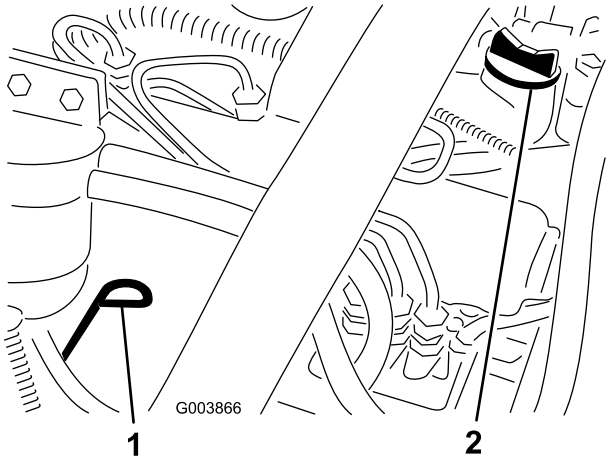

Figure 24

Reelmaster 5400

1. Dipstick
2. Oil fill cap

4. Remove dipstick and check oil level on dipstick.

   The oil level should be up to the Full mark .

5. If the oil level is below the Full mark, remove the fill cap and add oil until level reaches the Full mark on dipstick.

   Do not overfill.

Important: **Be sure to keep the engine oil level between the upper and lower limits on the oil gauge. Engine failure may occur as a result of over filling or under filling the engine oil.**

6. Install the oil fill cap and close the hood.

Checking the Cooling System

Clean debris off of the screen, oil cooler, and front of the radiator daily and more often if conditions are extremely dusty and dirty. Refer to section on Removing Debris from the Cooling System in Cooling System Maintenance, page 52.

The cooling system is filled with a 50/50 solution of water and permanent ethylene glycol antifreeze. Check the level of coolant in the expansion tank at the beginning of each day before starting the engine. The capacity of the cooling system is 9.6 quarts (9 l).

If the engine has been running, the pressurized, hot coolant can escape and cause burns.

- **Do not open the radiator cap when the engine is running.**
- **Use a rag when opening the radiator cap, and open the cap slowly to allow steam to escape.**

1. Check the level of coolant in the expansion tank (Figure 25).

   The coolant level should be between the marks on the side of the tank.

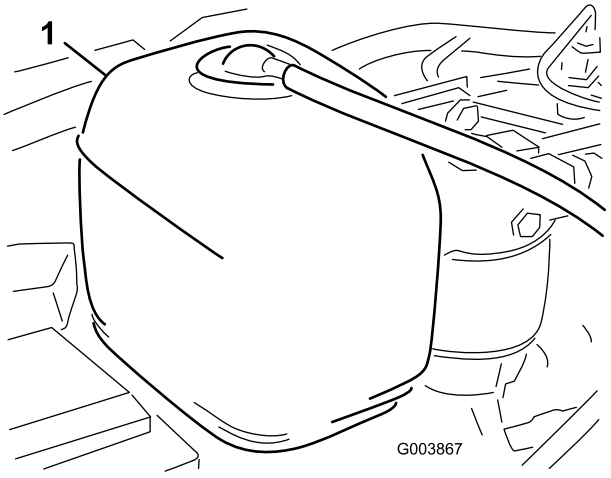

Figure 25

1. Expansion tank

2. If the coolant level is low, remove the expansion tank cap and replenish the system. **Do not overfill.**
3. Install the expansion tank cap.

Filling the Fuel Tank

1. Remove the fuel tank cap (Figure 26).

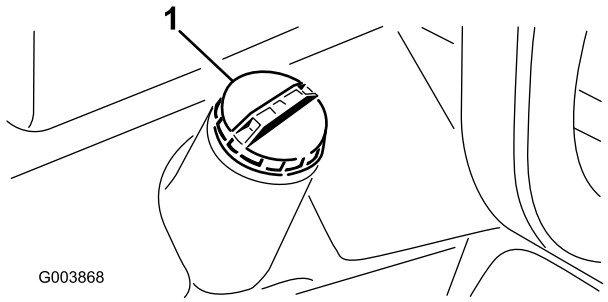

Figure 26

1. Fuel tank cap

2. Fill the tank to about one inch below the top tank, not the filler neck, with No. 2 diesel fuel.

Under certain conditions, diesel fuel and fuel vapors are highly flammable and explosive. A fire or explosion from fuel can burn you and others and can cause property damage.

- **Use a funnel and fill the fuel tank outdoors, in an open area, when the engine is off and is cold. Wipe up any fuel that spills.**
- **Do not fill the fuel tank completely full. Add fuel to the fuel tank until the level is 1/4 to 1/2 inch (6 to 13 mm) below the bottom of the filler neck. This empty space in the tank allows the fuel to expand.**
- **Never smoke when handling fuel, and stay away from an open flame or where fuel fumes may be ignited by a spark.**
- **Store fuel in a clean, safety-approved container and keep the cap in place.**

3. Install the fuel tank cap.

Checking the Transmission Fluid

The front axle housing acts as the reservoir for the transmission fluid. The transmission and axle housing are shipped from the factory with approximately 5 quarts (4.7 l) of Mobil 424 hydraulic fluid. However, check the level of transmission fluid before starting the engine for the first time and daily thereafter.

1. Position the machine on a level surface, lower the cutting units, and stop the engine.
2. Remove the floor panel.
3. Unscrew the dipstick cap from the transmission filler neck (Figure 27) and wipe it with a clean rag.

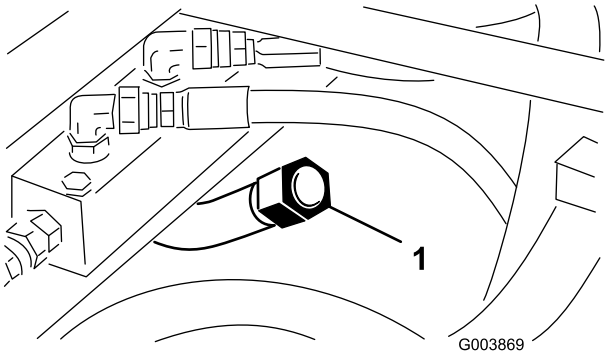

Figure 27

1. Transmission dipstick cap

4. Screw the dipstick cap into the filler neck.
5. Remove the dipstick and check level of the fluid.
6. If the level is not within 1/2 inch (1.25 cm) from the groove in the dipstick, add enough fluid to raise the level to the groove.

   Important: Do not overfill by more than 1/4 inch (6 mm) above the groove.
7. Screw the dipstick cap finger-tight onto the filler neck. It is not necessary to tighten the cap with a wrench.

Checking the Hydraulic Fluid Level

The machine's reservoir is filled at the factory with approximately 7.5 U.S. gallons (13.2 l) of high quality hydraulic fluid. **Check the level of the hydraulic fluid before the engine is first started and daily thereafter.** The recommended replacement fluid is as follows:

Toro Premium Transmission/Hydraulic Tractor Fluid (Available in 5 gallon pails or 55 gallon drums. See parts catalog or Toro distributor for part numbers.)

Alternate fluids: If the Toro fluid is not available, other petroleum-based Universal Tractor Hydraulic Fluids (UTHF) may be used, provided its specifications fall within the listed range for all the following material properties and it meets industry standards. We do not recommend the use of synthetic fluid. Consult with your lubricant distributor to identify a satisfactory product

Note: Toro will not assume responsibility for damage caused by improper substitutions, so use only products from reputable manufacturers who will stand behind their recommendation.

High Viscosity Index/Low Pour Point Anti-wear Hydraulic Fluid, ISO VG 46

Material Properties:

Viscosity, ASTM D445	cSt @ 40°C 55 to 62 cSt @ 100°C 9.1 to 9.8
Viscosity Index ASTM D2270	140 to 152
Pour Point, ASTM D97	-35°F to -46°F

Industry Specifications:

API GL-4, AGCO Powerfluid 821 XL, Ford New Holland FNHA-2-C-201.00, Kubota UDT, John Deere J20C, Vickers 35VQ25 and Volvo WB-101/BM

Note: Many hydraulic fluids are almost colorless, making it difficult to spot leaks. A red dye additive for the hydraulic system oil is available in 2/3 oz. (20 ml) bottles. One bottle is sufficient for 4-6 gal (15-22 1) of hydraulic oil. Order part no. 44-2500 from your authorized Toro distributor.

1. Position the machine on a level surface, lower the cutting units, and stop the engine.
2. Clean the area around the filler neck and cap of the hydraulic tank (Figure 28).

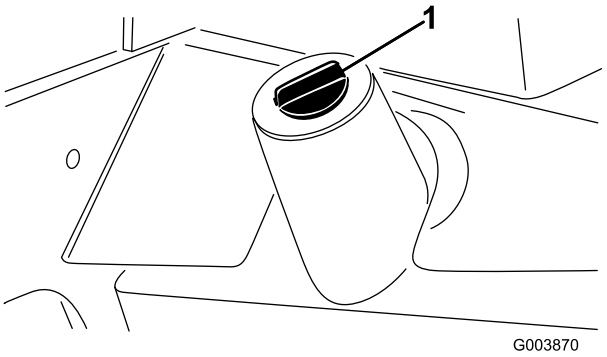

Figure 28

1. Hydraulic tank cap

3. Remove the cap from the filler neck.
4. Remove the dipstick from the filler neck and wipe it with a clean rag.
5. Insert the dipstick into the filler neck; then remove it and check the fluid level.

   The fluid level should be within 1/4 inch (6 mm) of the mark on the dipstick.
6. If the level is low, add the appropriate fluid to raise the level to the full mark.
7. Install the dipstick and cap onto the filler neck.

Checking the Rear Axle Lubricant

Note: This procedure is for Model 03544 only.

The rear axle of Model 03544 has three separate reservoirs which use SAE 80W-90 weight gear lube. Although the axle is shipped with lubricant from the factory, check the level before operating the machine.

1. Position the machine on a level surface.
2. Remove the 3 check plugs from axle (Figure 29 and Figure 30) and make sure lubricant is up to bottom of each hole.

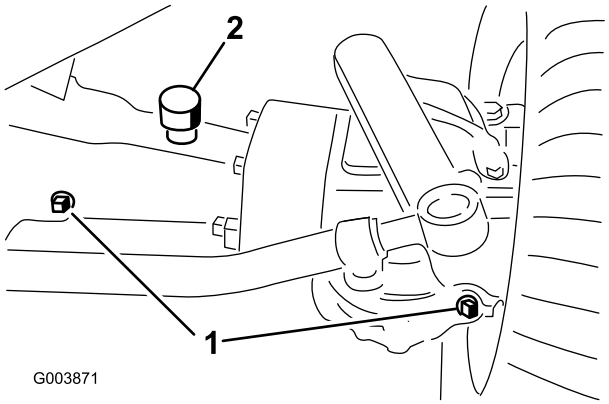

Figure 29

1. Check plug
2. Fill plug

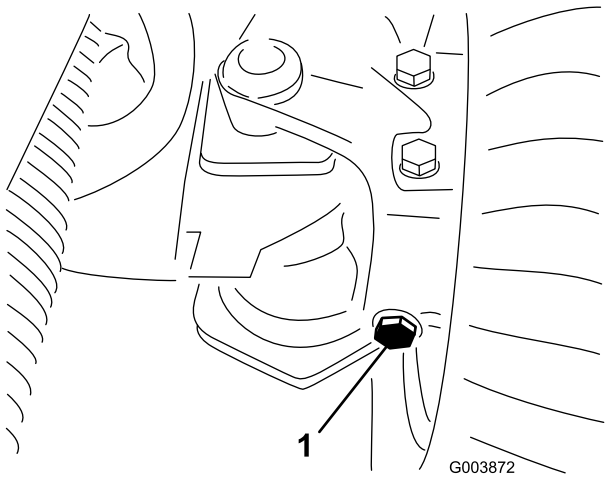

Figure 30

1. Left check plug (rear of the axle)

3. If the level is low, remove the center fill plug and add enough lubricant to bring the level up to the bottom of the center check plug hole.

4. Remove each end check plug and add enough lubricant to bring the level up to the bottom of each check plug hole.
5. Install all plugs.

Checking the Reel to Bedknife Contact

Each day before operating, check reel to bedknife contact, regardless if the quality of cut had previously been acceptable. There must be light contact across the full length of the reel and the bedknife (refer to Adjusting the Reel to Bedknife in the cutting unit *Operator's Manual*).

Check the Torque of the Wheel Nuts

Torque the wheel nuts to 75 to 80 ft-lb (102 to 108 N·m) after **1-4 hours** of operation and again after **10 hours** of operation. Torque every **250 hours** thereafter.

Failure to maintain proper torque of the wheel nuts could result in personal injury.

Bleeding the Fuel System

You must bleed the fuel system before starting the engine if any of the following situations have occurred:

- Initial start up of a new machine.
- Engine has ceased running due to lack of fuel.
- Maintenance has been performed upon fuel system components; i.e., filter replaced, separator serviced, etc.

Under certain conditions, diesel fuel and fuel vapors are highly flammable and explosive. A fire or explosion from fuel can burn you and others and can cause property damage.

- **Use a funnel and fill the fuel tank outdoors, in an open area, when the engine is off and is cold. Wipe up any fuel that spills.**
- **Do not fill the fuel tank completely full. Add fuel to the fuel tank until the level is 1/4 to 1/2 in. (6 to 13 mm) below the bottom of the filler neck. This empty space in the tank allows the fuel to expand.**
- **Never smoke when handling fuel, and stay away from an open flame or where fuel fumes may be ignited by a spark.**
- **Store fuel in a clean, safety-approved container and keep the cap in place.**

1. Park the machine on a level surface and ensure that the fuel tank is at least half full.
2. Open the hood.
3. Open the air bleed screw on the fuel injection pump (Figure 31) with a 12 mm wrench.

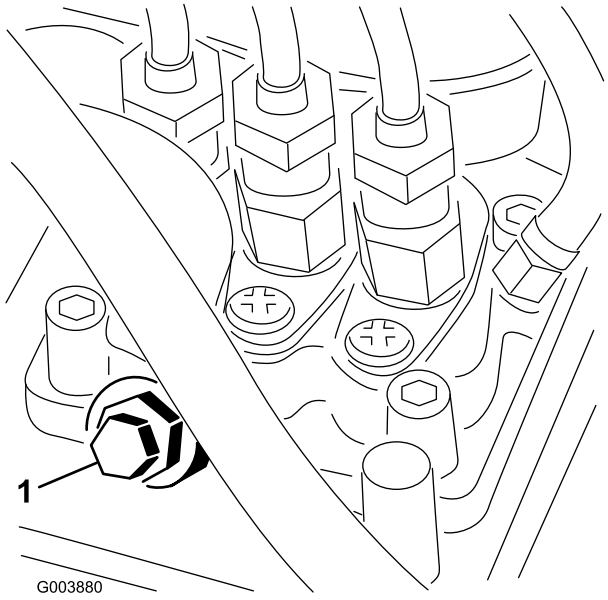

Figure 31

1. Fuel injection pump bleed screw

4. Turn the key in the ignition switch to the On position. The electric fuel pump will begin operation, thereby forcing air out around the air bleed screw. Leave the key in the On position until a solid stream of fuel flows out around the screw.
5. Tighten the screw and turn the key to the Off position.

Note: Normally, the engine should start after the above bleeding procedures are followed. However, if engine does not start, air may be trapped between injection pump and injectors; refer to Bleeding Air from the Injectors in Fuel System Maintenance, page 46.

Starting and Stopping the Engine

Important: You must bleed the fuel system before starting the engine if you are starting the engine for the first time, the engine has stopped due to lack of fuel, or you have performed maintenance on the fuel system; refer to Bleeding the Fuel System.

Starting the Engine

1. Sit on the seat, keep your foot off of the traction pedal so that it is in Neutral, engage the parking brake, set the throttle to the Fast position, and ensure that the Enable/Disable switch is in the Disable position.
2. Turn the ignition switch to the On/Preheat position.

   An automatic timer will control the glowplug preheat for 6 seconds.
3. After preheating the glowplugs, turn key to the Start position.

   Crank the engine for no longer than 15 seconds. Release the key when the engine starts. If additional preheating is required, turn key to the Off position and then to the On/Preheat position. Repeat this process as required.
4. Run the engine at idle speed or partial throttle until it warms up.

   Note: Move the throttle to the Fast position when restarting a warm engine.

Stopping the Engine

1. Move all controls to Neutral, set the parking brake, and move the throttle to the idle position.
2. Turn the key to the Off position and remove it from the switch.

   Important: Allow the engine to idle for 5 minutes before shutting it off after a full load operation. Failure to do so may lead to turbo-charger trouble.

Setting the Reel Speed

To achieve a consistent, high quality-of-cut and a uniform after cut appearance, it is important that you set the reel speed controls (located under the seat) correctly. Adjust the reel speed controls as follows:

1. Select the height-of-cut at which the cutting units are set.
2. Choose the desired ground speed best suited for conditions.
3. Using the appropriate graph on decal 98-9342 (Figure 32) for 5 blade or 8 blade cutting units, determine the proper reel speed setting.

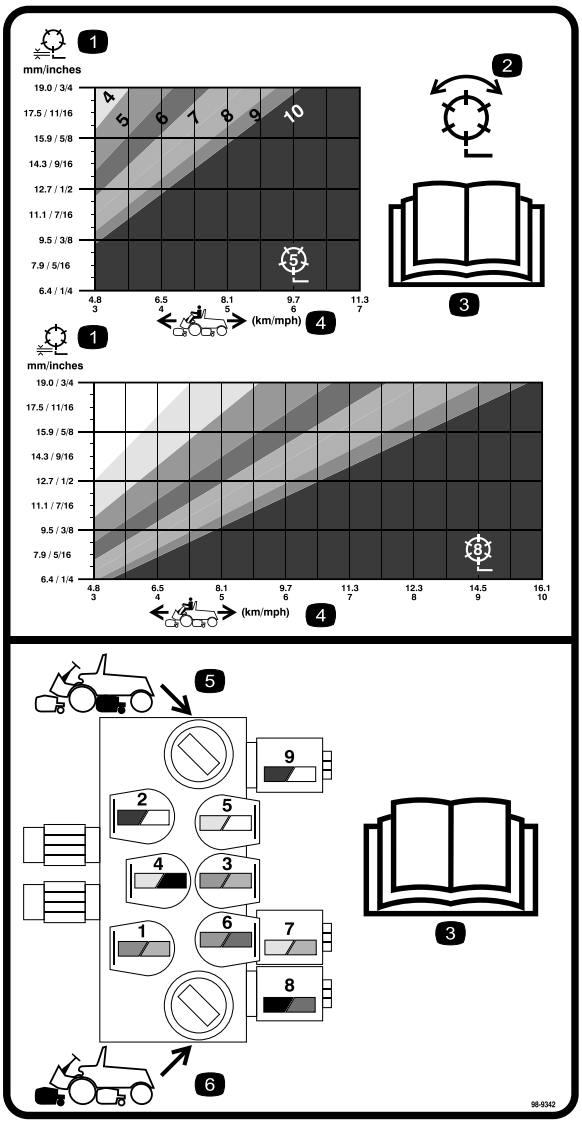

Figure 32

Decal 98-9342

1. Reel—height of cut
2. Reel—mow and backlap
3. Read the *Operator's Manual.*
4. Machine speed
5. Rear reels circuit controls
6. Front reels circuit controls

4. To set the reel speed, rotate knobs (Figure 33) until the indicator arrows are in line with the number designating the desired setting.

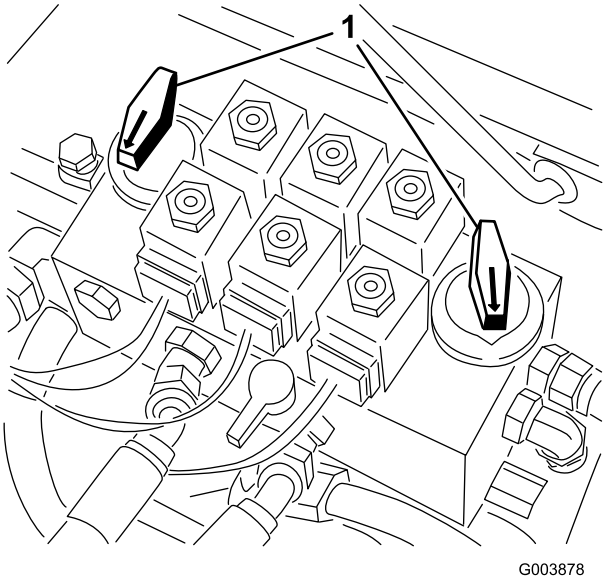

Figure 33

1. Reel speed control knobs

Note: The reel speed can be increased or decreased to compensate for turf conditions.

Adjusting the Lift Arm Down Pressure

You can adjust the down pressure spring on each cutting unit lift arm to compensate for different turf conditions. Increased down pressure will help keep the cutting units on the ground when mowing at higher speeds and helps maintain a uniform height-of-cut in rough conditions or in areas of thatch build up.

You can adjust each down pressure spring to one of four settings. Each increment increases or decreases down pressure on the cutting unit by 8 lb (3.6 kg).

1. Position the machine on a level surface, lower the cutting units, stop the engine, engage the parking brakes, and remove the key from ignition switch.
2. Remove the floor plate in front of the seat and open the hood to gain access to all 5 springs.

The springs are under tension.

Use caution when adjusting them.

3. Place an open end wrench on the hex shaft of the spring bracket (Figure 34).

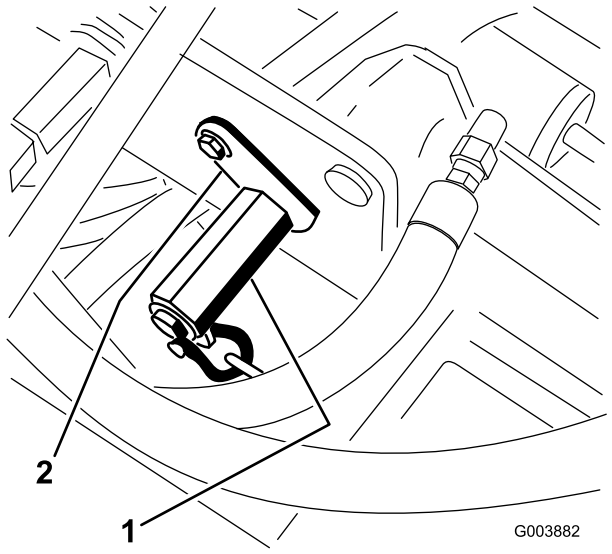

Figure 34

1. Spring bracket hex shaft 2. Retaining bracket

4. Remove the bolt and locknut securing retaining bracket (Figure 34), while rotating the hex shaft to relieve spring tension.
5. Move the spring bracket to the desired location and install the bolt and locknut, while rotating the hex shaft to relieve spring tension.

Towing the Traction Unit

If it becomes necessary to tow the machine, tow it forward only, for a short distance and at a speed no greater than 3 mph (4.8 kph).

Important: If these towing limits are exceeded, severe damage to the hydrostatic transmission may occur.

To tow a disabled machine:

1. Loosen and remove the bolts securing the drive shaft to the engine drive coupler.
2. Loosen the bolts clamping the drive shaft to the transmission (Figure 35).

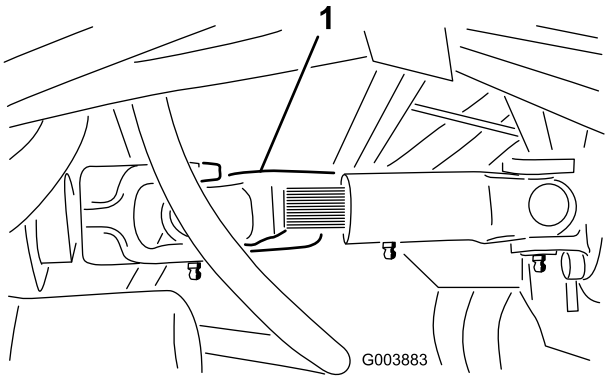

Figure 35

1. Drive shaft

3. Remove the drive shaft.

Important: If you do not remove the drive shaft before towing, the transmission input shaft will not be able to rotate, thus not allowing the transmission to maintain its internal lubrication. Severe damage to the hydrostatic transmission may occur.

4. Attach a suitable chain, strap, or cable to the center of the front frame member (Figure 36).

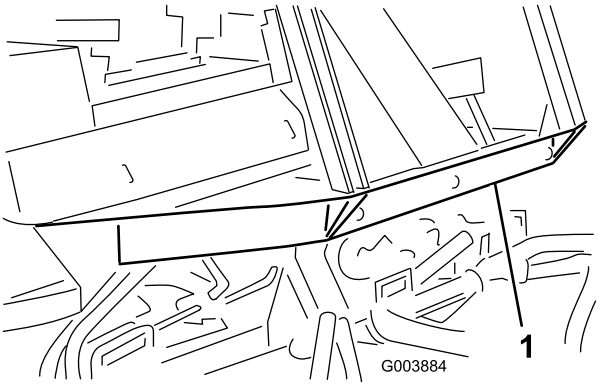

Figure 36

1. Center of front frame member

Note: Lock both brake pedals together before towing.

5. Attach the other end of the towing device to a vehicle that is capable of towing the machine safely and at speeds below 3 mph (4.8 kph).

Important: An operator must be on the machine to steer it and keep the traction pedal fully depressed in the forward position while towing.

6. When towing is completed, install the drive-shaft as shown in Figure 35. The splines

are designed to allow assembly only when the two halves of the shaft are properly oriented.

Understanding the Diagnostic Light

The machine is equipped with a diagnostic light which indicates if the electronic controller is functioning correctly. The green diagnostic light is located under the control panel, next to the fuse block (Figure 37). When the electronic controller is functioning correctly and the key switch is moved to the On position, the controller diagnostic light will be illuminated. The light will blink if the controller detects a malfunction in the electrical system. The light will stop blinking and automatically reset when the key switch is turned to the Off position.

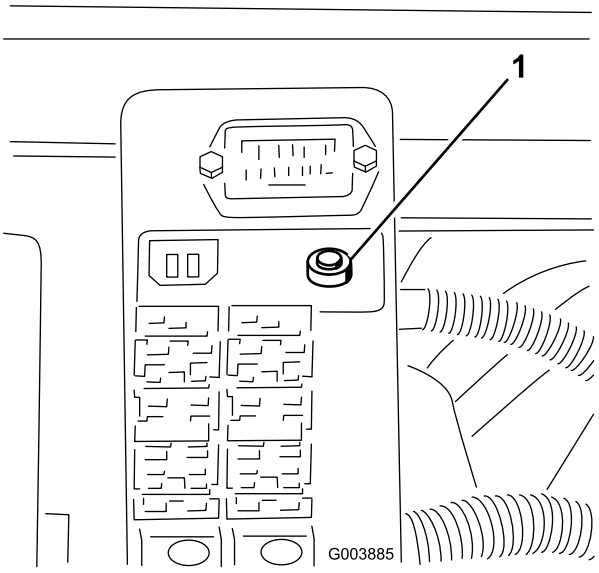

Figure 37

1. Diagnostic light

When the controller diagnostic light blinks, one of the following problems has been detected by the controller:

- One of the outputs has been shorted.
- One of the outputs is open circuited.

Using the diagnostic display, determine which output is malfunctioning; refer to Checking the Interlock Switches.

If the diagnostic light is not illuminated when the key switch is in the On position, this indicates that the electronic controller is not operating. Possible causes are as follows:

- Loop-back is not connected.
- The light is burned out.
- Fuses are blown.
- It is not functioning correctly.

Check the electrical connections, input fuses, and diagnostic light bulb to determine the malfunction. Ensure that the loop-back connector is secured to the wire harness connector.

Diagnostic Ace Display

The machine is equipped with an electronic controller which controls most machine functions. The controller determines what function is required for various input switches (i.e. seat switch, key switch, etc.) and turns on the outputs to actuate solenoids or relays for the requested machine function.

For the electronic controller to control the machine as desired, each of the input switches, output solenoids, and relays must be connected and functioning properly.

Use the Diagnostic ACE display to help verify and correct electrical functions of the machine.

Checking the Interlock Switches

The purpose of the interlock switches are to prevent the engine from cranking or starting unless the traction pedal is in the Neutral position, the Enable/Disable switch is in the Disable position, and the Lower Mow/Raise control is in the Neutral position. In addition, the engine should stop when the traction pedal is pressed with operator off of the seat.

If safety interlock switches are disconnected or damaged the machine could operate unexpectedly causing personal injury.

- **Do not tamper with the interlock switches.**
- **Check the operation of the interlock switches daily and replace any damaged switches before operating the machine.**
- **Replace switches every two years regardless of whether they are operating properly or not.**

Verifying the Interlock Switch Function

1. Park the machine on a level surface, lower the cutting units, stop the engine, and engage the parking brake.
2. Open control panel cover.
3. Locate the wire harness and connectors near the controller (Figure 38).

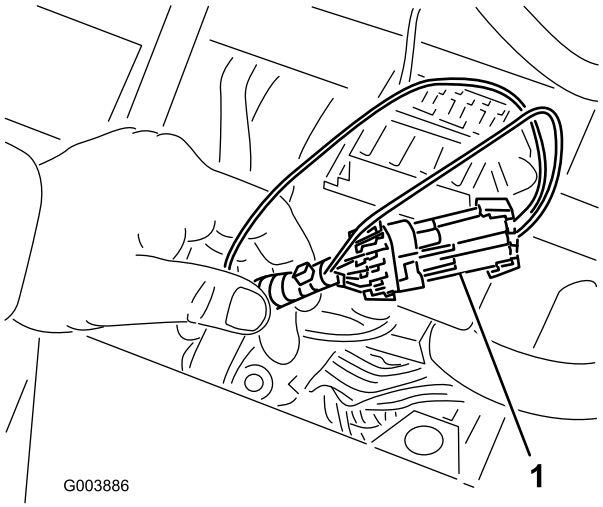

Figure 38

1. Wire harness and connectors

4. Carefully unplug loop back connector from harness connector.
5. Connect the Diagnostic ACE display connector to the harness connector (Figure 39).

   Note: Make sure correct overlay decal is positioned on Diagnostic ACE display.

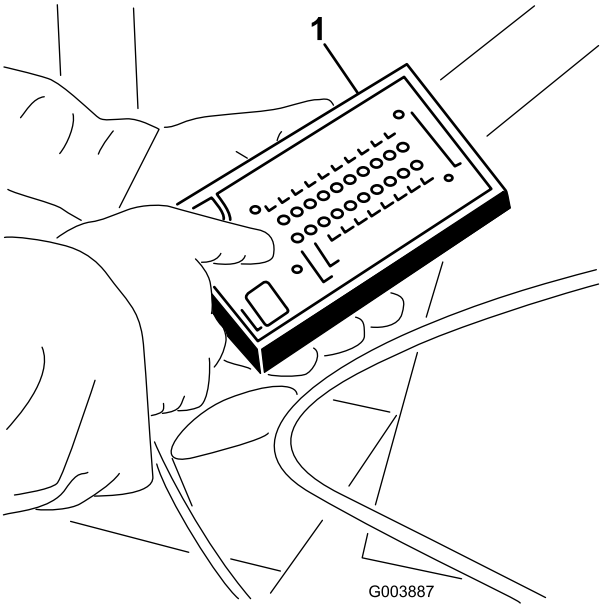

Figure 39

1. Diagnostic ACE

6. Turn the key switch to the On position, but do not start the machine.

   Note: The red text on the overlay decal refers to input switches and the green text refers to outputs.

7. The "inputs displayed" LED, on the lower right column of the Diagnostic ACE, should be illuminated. If the "outputs displayed" LED is illuminated, press the toggle button, on Diagnostic ACE, to change LED to "inputs displayed".

   The Diagnostic ACE will illuminate the LED associated with each of the inputs when that input switch is closed.

8. Individually, change each of the switches from open to closed (i.e., sit on seat, engage traction pedal, etc.), and note that the appropriate LED on Diagnostic ACE will blink on and off when corresponding switch is closed. Repeat this for all switches that you can change by hand.
9. If a switch is closed and the appropriate LED does not turn on, check all wiring and connections to the switch and/or check the switches with an ohm meter. Replace any defective switches and repair any defective wiring.

Note: The Diagnostic ACE also has the ability to detect which output solenoids or relays are turned on. This is a quick way to determine if a machine malfunction is electrical or hydraulic.

Verifying Output Function

1. Park the machine on a level surface, lower the cutting units, stop the engine, and engage the parking brake.
2. Open control panel cover.
3. Locate wire harness and connectors near controller.
4. Carefully unplug loopback connector from harness connector.
5. Connect the Diagnostic ACE connector to the harness connector.

   Note: Make sure correct overlay decal is positioned on Diagnostic ACE.
6. Turn the key switch to the ON position, but do not start machine.

   Note: The red text on the overlay decal refers to input switches and the green text refers to outputs.
7. The "outputs displayed" LED, on lower right column of Diagnostic ACE, should be illuminated. If the "inputs displayed" LED is illuminated, press the toggle button, on the Diagnostic ACE, to change the LED to "outputs displayed".

   Note: It may be necessary to toggle between "inputs displayed" and "outputs displayed" several times to do the following step. To toggle back and forth, press the toggle button once. This may be done as often as required. Do not hold the button.
8. Sit on the seat and attempt to operate the desired function of the machine. (If you need help verifying the correct input settings for each function, refer to Figure 40). The appropriate output LEDs should illuminate to indicate that the ECU is turning on that function. (Refer to the logic chart (Figure 40) to be certain of the specified output LEDs.

Note: If any output LED is blinking, this indicates an electrical problem with that OUTPUT. Repair or replace defective electrical parts immediately. To reset a blinking LED, turn the key switch the Off position, then back to the On position.

If no output LEDs are blinking, but the correct output LEDs do not illuminate, verify that the required input switches are in the necessary positions to allow that function to occur. Verify correct switch function.

If the output LEDs are on as specified, but the machine does not function properly, this indicates a non-electrical problem. Repair as necessary.

Note: Due to electrical system constraints, the output LEDs for "START", "PREHEAT", and "ETR/ALT" may not blink even though an electrical problem may exist for those functions. If the machine problem appears to be with one of these functions, be certain to check the electrical circuit with a volt/ohm meter to verify that no electrical problem exists to these functions.

If each output switch is in the correct position and functioning correctly, but the output LEDs are not correctly illuminated, this indicates an ECU problem. If this occurs, contact your Toro Distributor for assistance.

Important: The Diagnostic ACE display must not be left connected to the machine. It is not designed to withstand the environment of the machine's every day use. When done using the Diagnostic ACE, disconnect it from the machine and connect loop-back connector to harness connector. The machine will not operate without loopback connector installed on the harness. Store the Diagnostic ACE in dry, secure location in the shop, not on the machine.

Diagnostic ACE Logic Grid

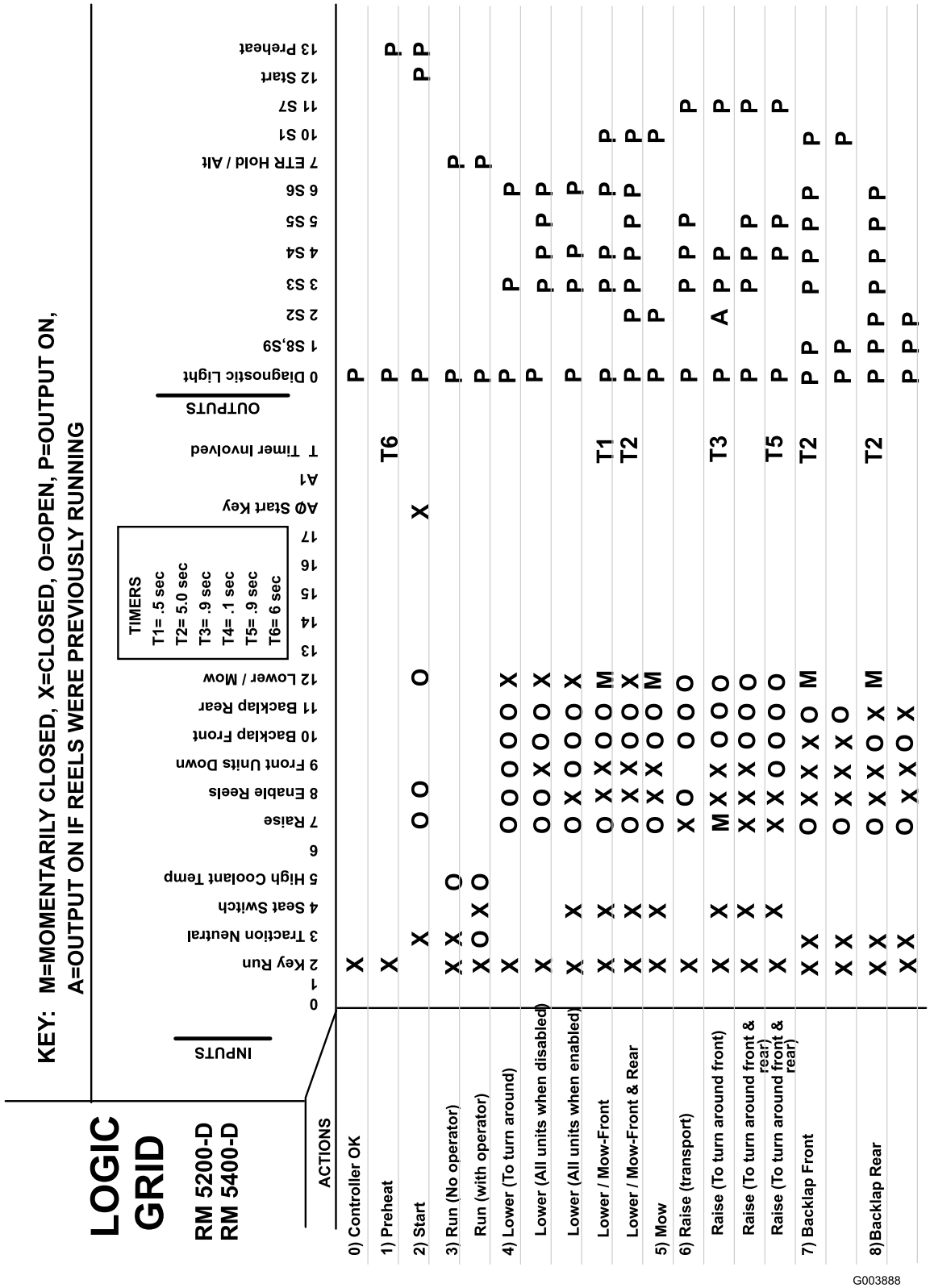

Figure 40

Hydraulic Valve Solenoid Functions

Use the list below to identify and describe the different functions of the solenoids in the hydraulic manifold. Each solenoid must be energized to allow function to occur.

Solenoid	Function
S1	Front reel circuit
S2	Rear reel circuit
S3	Lift/lower front wing cutting units
S4	Lift/lower center cutting unit
S5	Lift/lower rear cutting unit
S6	Lower any cutting units
S7	Lift any cutting units
S8, S9	Backlap any cutting units

Operating Tips

Familiarization

Before mowing grass, practice operating the machine in an open area. Start and stop the engine. Operate in forward and reverse. Lower and raise the cutting units and engage and disengage the reels. When you feel familiar with the machine, practice operating up and down slopes at different speeds.

The brakes can be used to assist in turning the machine. However, use them carefully, especially on soft or wet grass conditions because the turf may be torn accidentally. You may also use individual turning brakes to help maintain traction. For example, in some slope conditions, the uphill wheel slips and loses traction. If this situation occurs, press the uphill turn pedal gradually and intermittently until the uphill wheel stops slipping, thus, increasing traction on the downhill wheel.

⚠

When operating the machine, always use the seat belt and ROPS together.

Warning System

If a warning light comes on during operation, stop the machine immediately and correct the problem before continuing operation. Serious damage could occur if you operate the machine with a malfunction.

Mowing

Start the engine and move the throttle to the Fast position. Move the Enable/Disable switch to the Enable position and use the Lower Mow/Raise lever to control the cutting units (the front cutting units are timed to lower before the rear cutting units). To move forward and cut grass, press the traction pedal forward.

Note: Allow the engine to idle for 5 minutes before shutting it off after a full load operation. Failure to do so may lead to turbo-charger trouble.

Transport

Move the Enable/Disable switch to the Disable position and raise the cutting units to the transport position. Be careful when driving between objects so you do not accidentally damage the machine or cutting units. Use extra care when operating the machine on slopes. Drive slowly and avoid sharp turns on slopes to prevent roll overs. Lower the cutting units when going downhill for steering control.

Maintenance

Note: Determine the left and right sides of the machine from the normal operating position.

Recommended Maintenance Schedule(s)

Maintenance Service Interval	Maintenance Procedure
After the first operating hour	• Torque the wheel lug nuts to 75 to 80 ft-lb (102 to 108 N·m).
After the first 8 operating hours	• Check the condition and tension of the alternator belt. • Check the condition and tension of the cooling fan belt.
After the first 10 operating hours	• Torque the wheel lug nuts to 75 to 80 ft-lb (102 to 108 N·m).
After the first 50 operating hours	• Change the engine oil and filter. • Check the engine RPM (idle and full throttle).
After the first 200 operating hours	• Replace the transmission oil filter.
Before each use or daily	• Check the engine oil level. • Check the cooling system. • Check the transmission fluid. • Check the hydraulic fluid level. • Check the rear axle lubricant (Model 03544 only). • Check the reel to bedknife contact. • Check the operation of the interlock switches. • Inspect the air cleaner for damage and check the service indicator. If it is red, service the air cleaner. • Check and clean out the air filter precleaner bowl (more often in dusty and dirty conditions). • Drain water and other contaminants from the fuel filter/water separator. • Remove debris from the screen, oil coolers, and radiator (more frequently in dirty operating conditions). • Check the hydraulic lines and hoses for leaks, kinked lines, loose mounting supports, wear, loose fittings, weather deterioration, and chemical deterioration.
Every 50 hours	• Grease the bearings and bushings. • Check the condition of and clean the battery. • Check the battery cable connections.
Every 100 hours	• Inspect the cooling system hoses. • Check the condition and tension of the alternator belt. • Check the condition and tension of the cooling fan belt.
Every 150 hours	• Change the engine oil and filter.
Every 200 hours	• Lubricate the front axle bearings. • Drain moisture from the fuel and hydraulic fluid tanks. • Check the reel bearing preload.
Every 250 hours	• Torque the wheel lug nuts to 75 to 80 ft-lb (102 to 108 N·m).

Maintenance Service Interval	Maintenance Procedure
Every 400 hours	• Check the fuel lines and connections for deterioration, damage, or loose connections. • Replace the fuel filter canister. • Replace the fuel prefilter. • Check the traction linkage movement. • Check the engine RPM (idle and full throttle).
Every 800 hours	• Change the transmission fluid. • Replace the transmission filter. • Change the rear axle lubricant (Model 03544 only) • Check the rear wheel toe-in. • Change the hydraulic fluid. • Change the hydraulic filter (sooner if the service interval indicator on the filter head is in the Red zone). • Pack the rear wheel bearings (2-wheel drive only) • Adjust the engine valves (refer to the engine Operator's Manual)
Every 2 years	• Drain and clean the fuel tank. • Flush and replace the cooling system fluid. • Drain and flush the hydraulic tank. • Replace all moving hoses. • Replace the safety interlock switches

Important: **Refer to your Engine Operator's Manual for additional maintenance procedures.**

Daily Maintenance Checklist

Duplicate this page for routine use.

Maintenance Check Item	For the week of:						
	Mon.	Tues.	Wed.	Thurs.	Fri.	Sat.	Sun.
Check the safety interlock operation.							
Check the brake operation.							
Check the engine oil and fuel level.							
Drain the water/fuel separator.							
Check the air filter restriction indicator.							
Check the radiator and screen for debris.							
Check unusual engine noises.[1]							
Check unusual operating noises.							
Check the transmission oil level.							
Check the hydraulic system oil level.							
Check the hydraulic filter indicator. [2]							
Check hydraulic hoses for damage.							
Check for fluid leaks.							
Check the tire pressure.							
Check the instrument operation.							
Check the reel-to-bedknife adjustment.							
Check the height-of-cut adjustment.							
Check the shear pins on the cutting units.							
Lubricate all grease fittings.[3]							
Touch-up damaged paint.							

1. Check the glow plug and injector nozzles if hard starting, excess smoke, or rough running is noted.
2. Check with the engine running and the oil at operating temperature.
3. Immediately after every washing, regardless of the interval listed.

Notation for Areas of Concern

Inspection performed by:

Item	Date	Information
1		
2		
3		
4		
5		
6		
7		
8		

Service Interval Chart

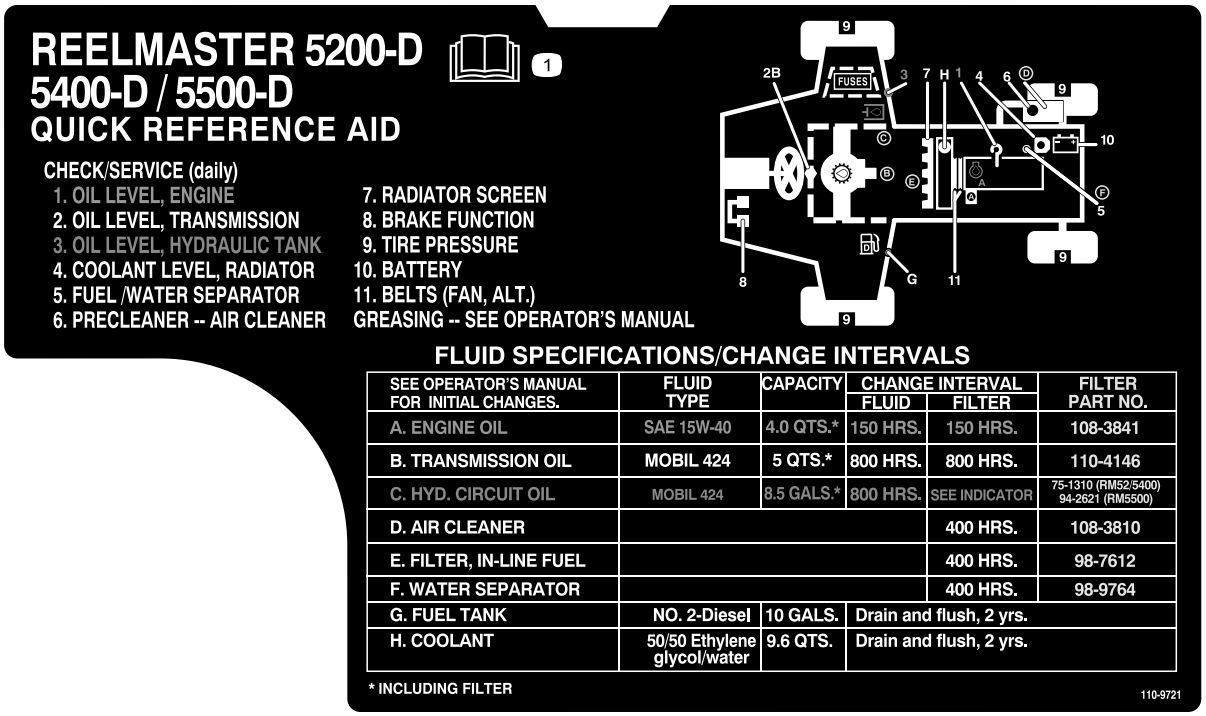

Figure 41

1. Read the *Operator's Manual.*

If you leave the key in the ignition switch, someone could accidently start the engine and seriously injure you or other bystanders.

Remove the key from the ignition before you do any maintenance.

Lubrication

Greasing the Bearings and Bushings

If you operate the machine under normal conditions, lubricate all grease fittings for the bearings and bushings after **every 50 hours of operation** with No. 2 General Purpose Lithium Base Grease. Lubricate bearings and bushings **immediately** after every washing, regardless of the interval listed.

The grease fitting locations and quantities are as follows:

- 3 fittings on the engine drive shaft (Figure 42)

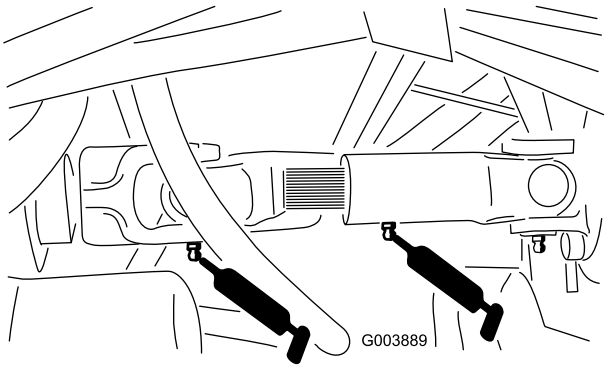

Figure 42

- 2 fittings on each cutting unit carrier frame and pivot (10 total) (Figure 43)

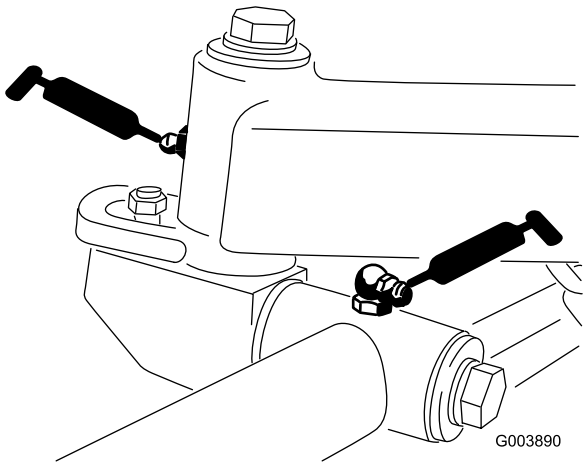

Figure 43

- 5 fittings on the lift arm pivots (Figure 44)
- 1 fitting on the drive shaft clutch (Figure 44)

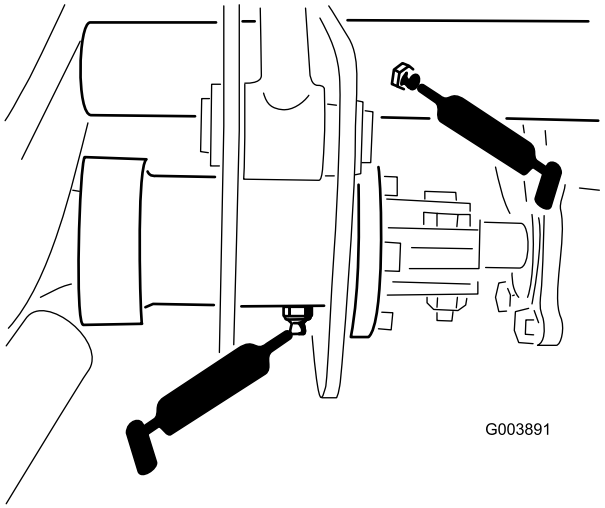

Figure 44

- 2 fittings on the rear axle tie rod (Figure 45)
- 2 fittings on the steering cylinder ball joints (Figure 45)
- 2 fittings on the axle steering pivots (Figure 45)
- 2 fittings on the rear axle pivot (Figure 45)

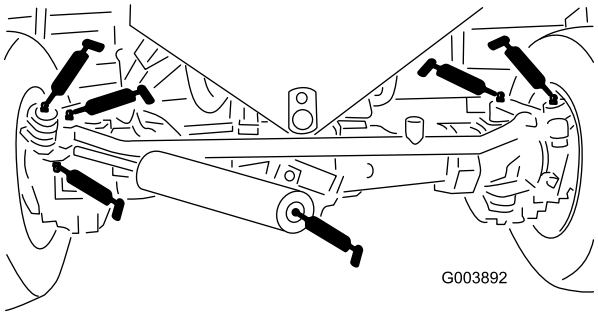

Figure 45

- 1 fitting on the traction control linkage at the transmission (Figure 46)
- 1 fitting on the drive shaft support bearing (Figure 46)
- 3 fittings on the rear axle drive shaft (Figure 46)

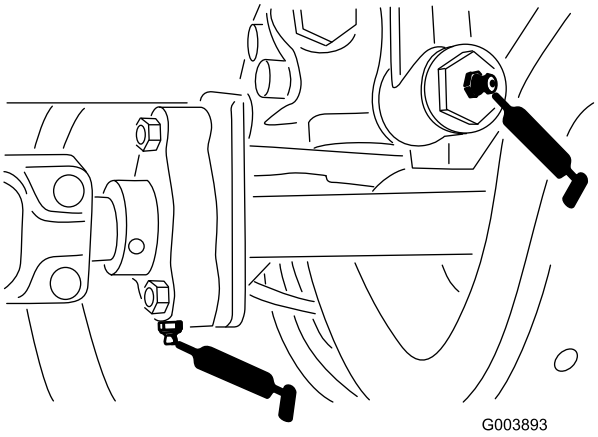

Figure 46

- 1 fitting on the brake pedal (Figure 47)

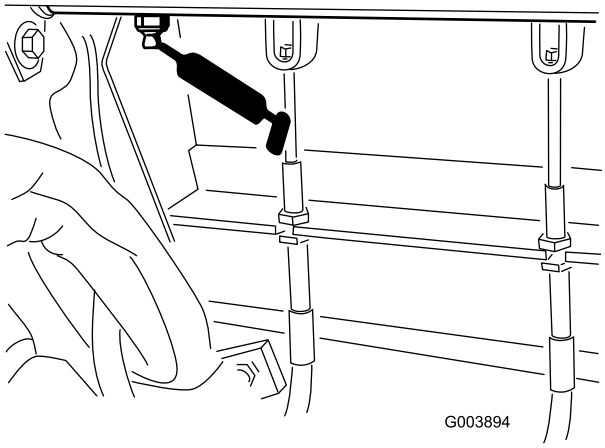

Figure 47

- 5 fittings on the lift cylinders (Figure 48)

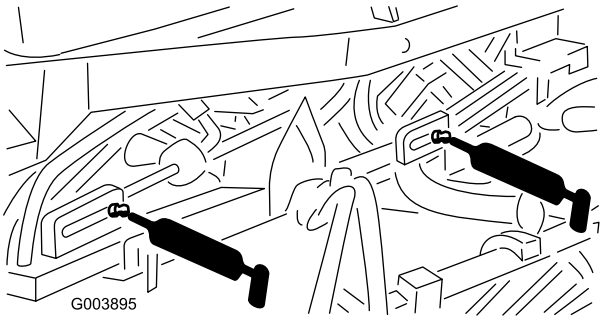

Figure 48

- 1 fitting on the fan shaft (Figure 49).

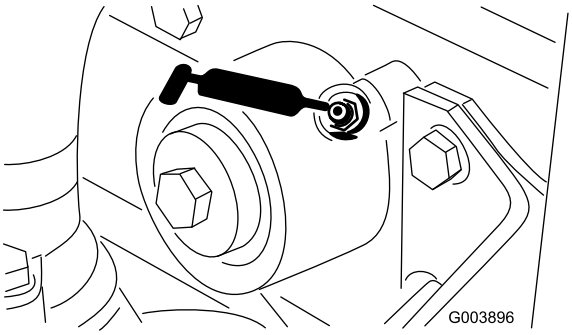

Figure 49

Engine Maintenance

Servicing the Air Cleaner

General Air Cleaner Maintenance

- Check the air cleaner body for damage which could cause an air leak. Replace it if it is damaged. Check the whole intake system for leaks, damage, or loose hose clamps.
- Service the air cleaner filter only when the service indicator requires it (turns red). Changing the air filter before it is necessary only increases the chance of dirt entering the engine when the filter is removed.
- Be sure the cover is seated correctly and seals with the air cleaner body.

Servicing the Air Cleaner Precleaner Bowl

Normally, inspect the precleaner bowl daily. When conditions are extremely dusty and dirty, inspect it more frequently. Do not let dust or debris build up above the level marked on the precleaner bowl.

1. Remove the thumb screw and separate the cover from the precleaner bowl (Figure 50).

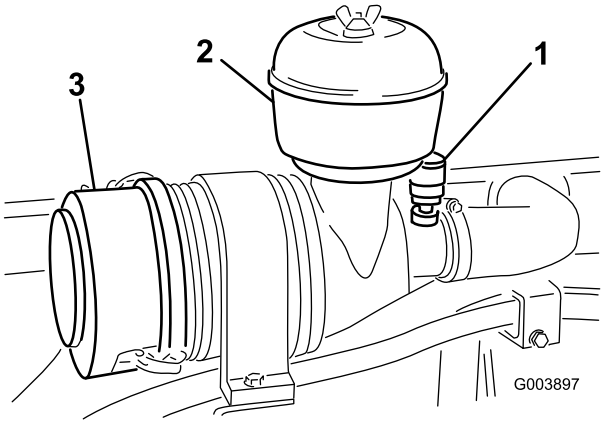

Figure 50

1. Air cleaner indicator
2. Precleaner bowl
3. Dust cap

2. Empty the precleaner bowl and wipe it clean.
3. Assemble and install the precleaner bowl, cover, and thumb screw.

Note: When operating the machine in extremely dusty conditions, an optional extension tube (Toro Part No. 43-3810), which raises precleaner bowl above the hood, thus, lengthening the time between precleaner bowl servicing, is available from your local authorized Toro Distributor.

Servicing the Air Cleaner

Only service the air cleaner when the service indicator on the air cleaner housing turns red (Figure 50).

1. Release the latches and remove the cover from the air cleaner body (Figure 50).
2. Before removing the filter, use low pressure air (40 psi, clean and dry) to help remove large accumulations of debris packed between the outside of the primary filter and the canister.

   Important: Avoid using high pressure air which could force dirt through the filter into the intake tract. This cleaning process prevents debris from migrating into the intake when the primary filter is removed.
3. Remove and replace the primary filter (Figure 51).

   Cleaning of the used element is not recommended due to the possibility of damage to the filter media.

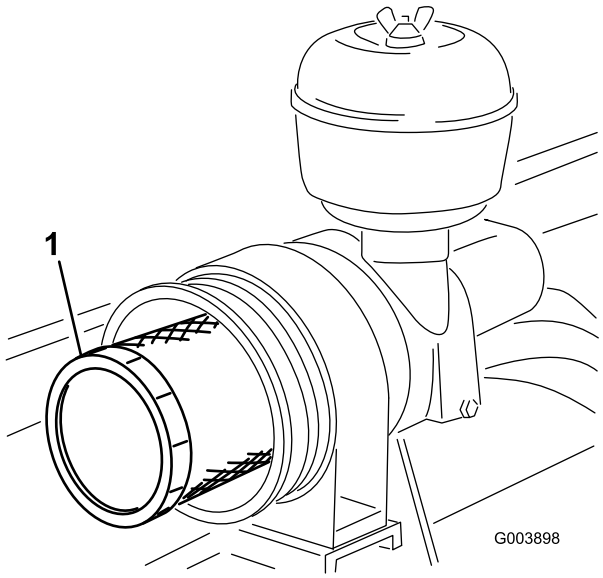

Figure 51

1. Filter element

4. Inspect the new filter for shipping damage, checking the sealing end of the filter and the body.

   Important: Do not use a damaged element.

5. Insert the new filter by applying pressure to the outer rim of the element to seat it in the canister.

   Important: Do not apply pressure to the flexible center of the filter.

6. Clean the dirt ejection port located in the removable cover. Remove the rubber outlet valve from the cover, clean the cavity, and replace the outlet valve.
7. Install the cover orienting the rubber outlet valve in a downward position—between approximately 5:00 to 7:00 when viewed from the end.
8. Secure the cover latches.
9. Reset the indicator (Figure 50) if it is showing red.

Servicing the Engine Oil and Filter

Change the engine oil and filter initially after the first 50 hours of operation and every 150 hours thereafter.

1. Remove the drain plug (Figure 52) and let the oil flow into a drain pan.

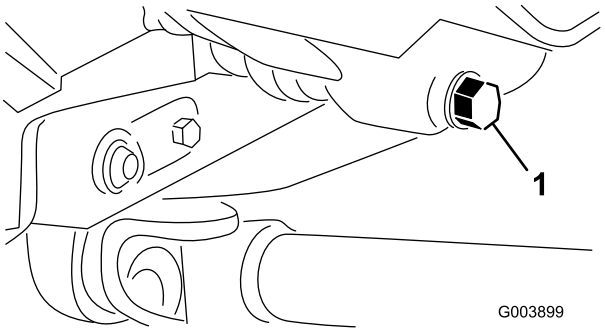

Figure 52

1. Engine oil drain plug

2. When the oil stops, install the drain plug.
3. Remove the oil filter (Figure 53).

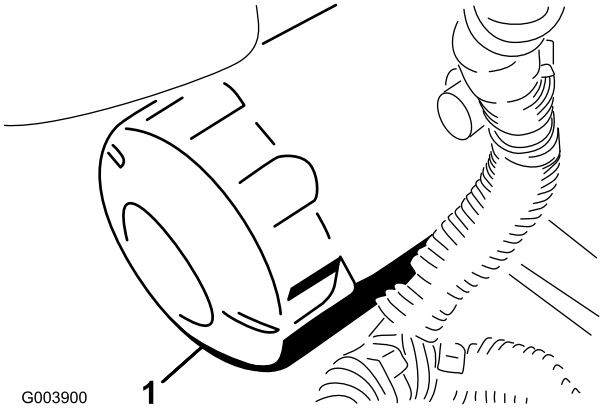

Figure 53

1. Engine oil filter

4. Apply a light coat of clean oil to the new filter seal.
5. Install the replacement oil filter to the filter adapter. Turn the oil filter clockwise until the rubber gasket contacts the filter adapter, then tighten the filter an additional 1/2 turn.

   Important: Do not over-tighten the filter.

6. Add oil to the crankcase; refer to Checking the Engine Oil in Operation, page 26.

Adjusting the Throttle

1. Position the throttle lever forward so that it stops against the seat base slot.
2. Loosen the throttle cable connector on the lever arm at the injection pump.

3. Hold the injection pump lever arm (Figure 54) against the high idle stop and tighten the cable connector.

   Note: When tightened, the cable connector must be free to swivel.

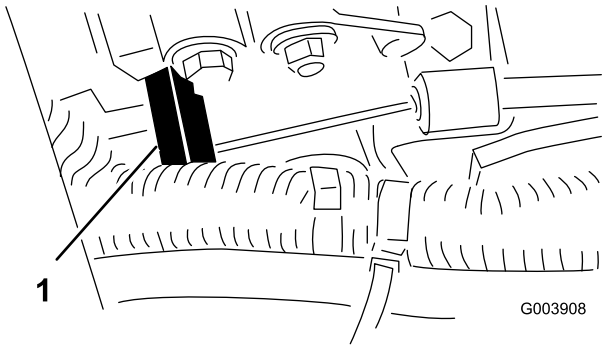

Figure 54

1. Injection pump lever arm

4. Torque the locknut used to set the friction device on the throttle lever to 40-55 in-lb (4.5 to 6 N·m). The maximum force required to operate the throttle lever should be 20 lb (9 kg).

Fuel System Maintenance

Under certain conditions, diesel fuel and fuel vapors are highly flammable and explosive. A fire or explosion from fuel can burn you and others and can cause property damage.

- **Use a funnel and fill the fuel tank outdoors, in an open area, when the engine is off and is cold. Wipe up any fuel that spills.**
- **Do not fill the fuel tank completely full. Add fuel to the fuel tank until the level is 1/4 to 1/2 in. (6 to 13 mm) below the bottom of the filler neck. This empty space in the tank allows the fuel to expand.**
- **Never smoke when handling fuel, and stay away from an open flame or where fuel fumes may be ignited by a spark.**
- **Store fuel in a clean, safety-approved container and keep the cap in place.**

Draining the Fuel Tank

Drain and clean the fuel tank every 2 years. Also, drain and clean the tank if the fuel system becomes contaminated or if the machine is to be stored for an extended period. Use clean fuel to flush out the tank.

Checking the Fuel Lines and Connections

Check the fuel lines and connections every 400 hours or yearly, whichever comes first. Inspect them for deterioration, damage, or loose connections.

Draining the Fuel Filter/Water Seperator

Drain water or other contaminants from the fuel filter/water separator (Figure 55) daily.

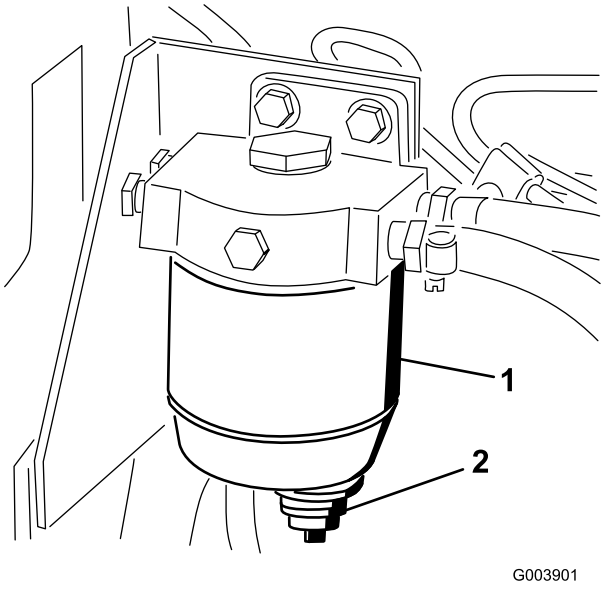

Figure 55

1. Fuel filter canister/water separator
2. Drain plug

1. Locate the fuel filter, under the hydraulic tank, and place a clean container under it.
2. Loosen the drain plug on the bottom of the filter canister and allow it to drain.
3. When finished, tighten the drain plug.

Replacing the Fuel Filter Canister

Replace the filter canister after every 400 hours of operation.

1. Clean the area where the filter canister mounts (Figure 55).
2. Remove the filter canister and clean the mounting surface (Figure 55).
3. Lubricate the gasket on the new filter canister with clean oil.
4. Install the filter canister by hand until the gasket contacts the mounting surface, then rotate it an additional 1/2 turn (Figure 55).

Replacing the Fuel Prefilter

Replace the fuel prefilter after every 400 operating hours or yearly, whichever occurs first.

1. Remove the screw securing the prefilter to the frame rail.
2. Clamp both fuel lines that connect to the fuel prefilter so that the fuel cannot drain when you remove the lines.
3. Loosen the hose clamps at both ends of the prefilter and pull the fuel lines off of it (Figure 56).

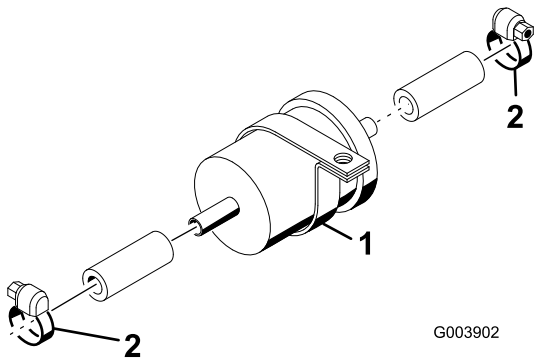

Figure 56

1. Fuel prefilter
2. Hose clamps

4. Slide the hose clamps onto ends of the fuel lines.
5. Push the fuel lines onto the new prefilter and secure them with the hose clamps (Figure 56).

   Important: Ensure that the arrow on the side of the prefilter points toward the injection pump.

Bleeding Air from the Fuel Injectors

Note: This procedure should be used only if the fuel system has been purged of air through normal priming procedures and the engine will not start; refer to Bleeding the Fuel System in Operation, page 26.

1. Loosen the pipe connection to the No. 1 nozzle and holder assembly (Figure 57).

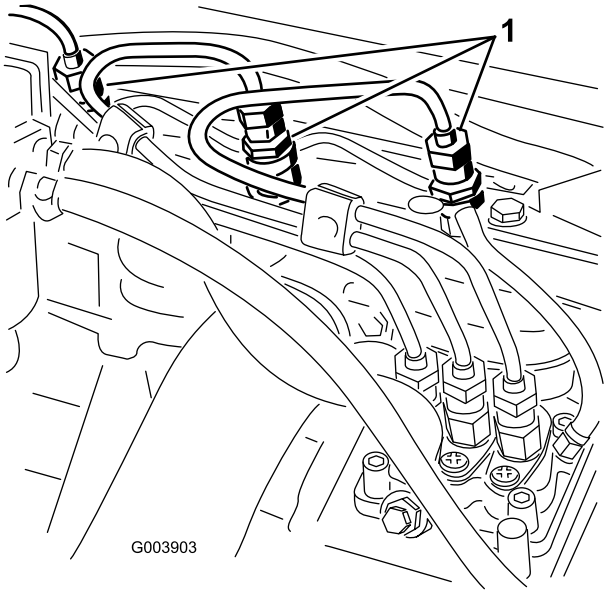

Figure 57

1. Fuel injector nozzle and holder assemblies

2. Move the throttle to the Fast position.
3. Turn the key in the key switch to the Start position and watch the fuel flow around the connector. When you observe a solid flow of fuel, turn the key to the Off position.
4. Tighten the pipe connector securely.
5. Repeat steps 1 through 4 on the remaining nozzles.

Electrical System Maintenance

Important: Before welding on the machine, disconnect both cables from the battery, both wire harness plugs from the electronic control unit, and the terminal connector from the alternator to prevent damage to the electrical system.

Servicing the Battery

Warning

CALIFORNIA
Proposition 65 Warning

Battery posts, terminals, and related accessories contain lead and lead compounds, chemicals known to the State of California to cause cancer and reproductive harm. Wash hands after handling.

Battery electrolyte contains sulfuric acid which is a deadly poison and causes severe burns.

- **Do not drink electrolyte and avoid contact with skin, eyes, or clothing. Wear safety glasses to shield your eyes and rubber gloves to protect your hands.**
- **Fill the battery where clean water is always available for flushing the skin.**

Charging the battery produces gasses that can explode.

Never smoke near the battery and keep sparks and flames away from it.

Check the battery condition weekly or after every 50 hours of operation. Keep the terminals and the entire battery case clean because a dirty battery will discharge slowly. To clean the battery, wash the entire case with a solution of baking soda and water. Rinse it with clear water. Coat the battery posts and cable connectors with Grafo 112X (skin-over) grease (Toro Part No. 505-47) or petroleum jelly to prevent corrosion.

Fuses

There are 4 fuses in the electrical system. They are located below the control panel (Figure 58 and Figure 59).

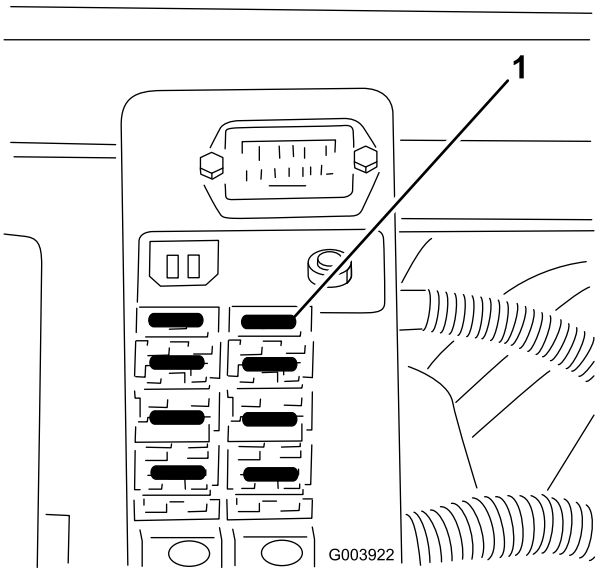

Figure 58

1. Fuses

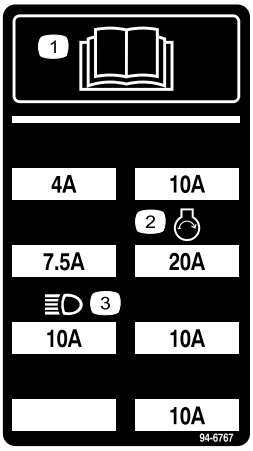

Figure 59

1. Read the *Operator's Manual*.
2. Headlights
3. Engine—start

Optional Lighting

Important: If you add optional lighting to the machine, use the following schematic and part numbers to prevent damage to the electrical system.

SCHEMATIC FOR OPTIONAL LIGHTING

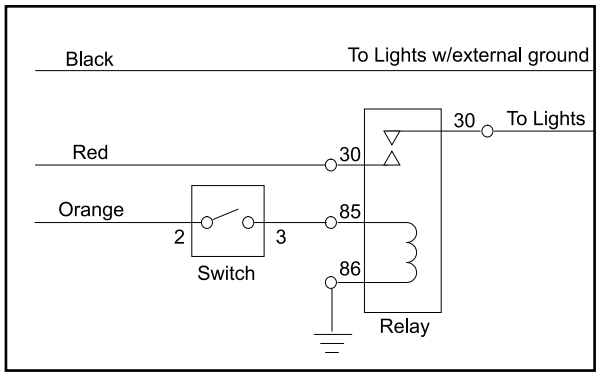

Switch*
Toro Part No. 75-1010
Honeywell Part No. 1TL1-2

Relay
Toro Part No. 70-1480
Bosch Part No. 0-332-204

Black, red and orange wires are located in control console.

Add 10 Amp fuse to fuse block at location shown

*** Punch out in control panel provided for switch installation**

G003923

Figure 60

Note: Make sure a good ground is achieved to prevent damage to machine.

Drive System Maintenance

Adjusting the Traction Drive for Neutral

The machine must not creep when traction pedal is released. If it does creep, an adjustment adjust it as follows:

1. Park the machine on a level surface, stop the engine, and lower the cutting units to the floor. Press only the right brake pedal and engage the parking brake.
2. Jack up the left side of the machine until the front tire is off the shop floor. Support the machine with jack stands to prevent it from falling accidentally.

   Note: On 4-wheel drive models, the left, rear tire must also be off the shop floor or the 4-wheel drive, drive-shaft must be removed.
3. Under the right side of the machine, loosen the locknut on the traction adjustment cam (Figure 61).

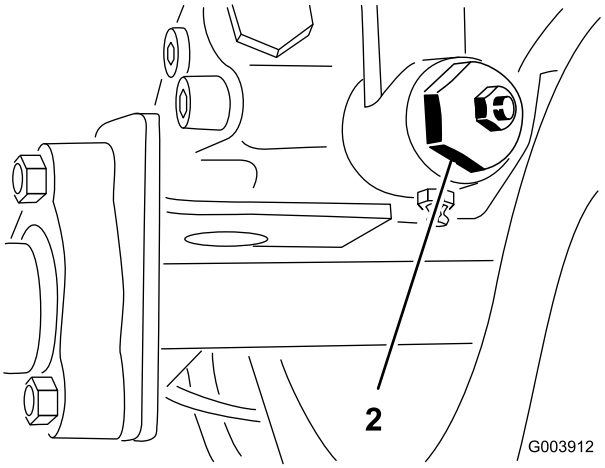

Figure 61

1. Traction adjustment cam

The engine must be running so the final adjustment of the traction adjustment cam can be performed. This could cause personal injury.

Keep hands, feet, face, and other body parts away from the muffler, other hot parts of the engine, and any rotating parts.

4. Start the engine and rotate the cam hex in either direction until the wheel ceases rotation.
5. Tighten the locknut to secure the adjustment.
6. Stop the engine and release the right brake. Remove the jack stands and lower the machine to the shop floor.
7. Test drive the machine to make sure it does not creep.

Checking and Adjusting the Traction Linkage

Due to normal wear in the control linkage and hydrostatic transmission, an increased amount of force may be required to return the transmission to neutral. Periodically check the machine.

1. Park the machine on a level surface, lower the cutting units to the floor, and stop the engine.
2. Connect the brake pedals together with the locking pin, push both pedals down, and pull the parking brake latch out.

3. Loosen the inner locknut securing the eye bolt to the spring anchor plate (Figure 62).

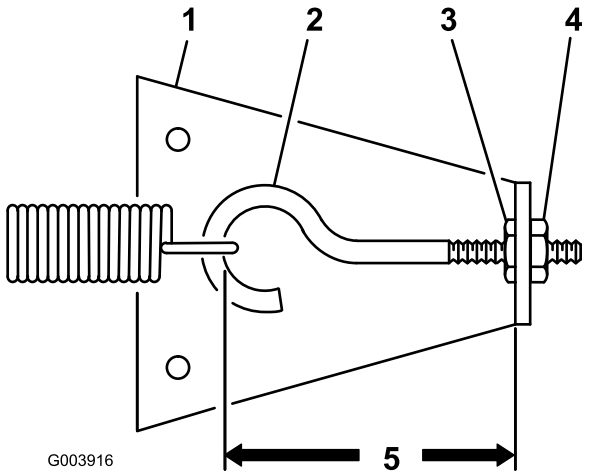

Figure 62

1. Spring anchor plate
2. Eye bolt
3. Inner locknut
4. Outer locknut
5. Shorten distance to decrease time required to stop machine.

4. Rotate the outer locknut clockwise until the distance between the inside of the eye bolt loop and the inside of the spring anchor plate is shortened 1/8 inch, as shown in Figure 62. Tighten the inner locknut.
5. Operate the machine and check the stopping distance. Repeat procedure if required.

   Note: Shortening the distance between the inside of eye bolt loop and inside of the spring anchor plate increases the pedal force on the traction pedal. Therefore, do not over adjust.

Changing the Transmission Fluid

Change the transmission fluid after every 800 hours of operation or annually, whichever occurs first, in normal conditions.

1. Position the machine on a level surface, lower the cutting units, stop the engine, engage the parking brakes, and remove the key from the ignition switch.
2. Clean the area around the suction line on the bottom of the transmission (Figure 63) and place a drain pan under the line.

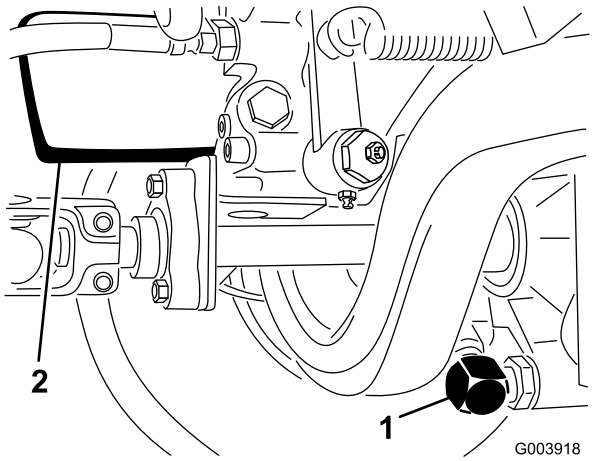

Figure 63

1. Transmission suction line
2. Transmission oil filter

3. Remove the line from the transmission allowing the fluid to drain into the drain pan.
4. Install the suction line to the transmission.
5. Fill the transmission with oil; refer to Checking the Transmission Fluid in Operation, page 26.
6. Before starting the engine, after changing the transmission fluid, disconnect the run (ETR) solenoid on the engine, and crank the engine for 15 seconds. This allows the charge pump to fill the transmission with fluid before you start the engine.

Replacing the Transmission Oil Filter

Replace the transmission filter initially after the first 200 operating hours and every 800 operating hours or annually, whichever occurs first, thereafter.

Only the Toro replacement filter (Part No. 110-4146) can be used in the hydraulic system.

Important: Use of any other filter may void the warranty on some components.

1. Position the machine on a level surface, lower the cutting units, stop the engine, engage the parking brakes, and remove the key from the ignition switch.
2. Clean the area around the filter mounting area (Figure 63) and place drain pan under filter.
3. Remove the filter.
4. Lubricate the gasket on the new filter with hydraulic oil.

5. Ensure that the filter mounting area is clean.
6. Install the filter by hand until the gasket contacts the mounting surface, then rotate it an additional 1/2 turn.
7. Start the engine and let it run for about two minutes to purge air from the system.
8. Stop the engine and check for leaks.
9. Check the transmission fluid level and replenish it if necessary.

Changing the Rear Axle Lubricant

Note: This procedure is for model 03544 only.

Change the oil in the rear axle after every 800 operating hours.

1. Position the machine on a level surface.
2. Clean the area around the drain plugs (Figure 64).

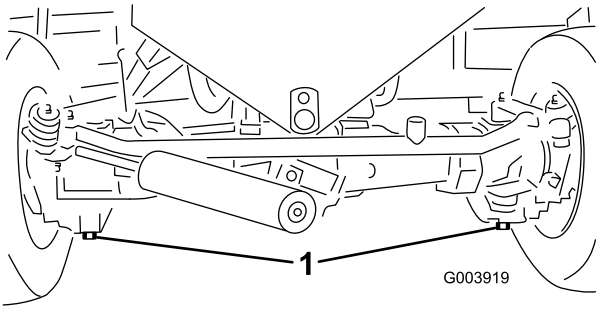

Figure 64

1. Drain plugs

3. Remove the plugs, allowing the oil to drain into drain pans.
4. After the oil is drained, apply thread locking compound to the drain plug threads and install them in the axle.
5. Fill the axle with lubricant; refer to Checking the Rear Axle Lubricant in Operation, page 26.

Adjusting the Rear Wheel Toe-in

The rear wheels should have 0 to 1/8 inch (0 to 3 mm) toe-in when they are pointed straight ahead. To check the toe-in, measure the center-to-center distance, at axle height, in the front and rear of the steering tires. If the toe-in is not within specifications, adjust it as described below for your model.

Check the rear wheel toe-in after every 800 operating hours or annually.

Models 03540 and 03543

1. Rotate the steering wheel so that the rear wheels are straight ahead.
2. Loosen the jam nuts on both tie rods (Figure 65).

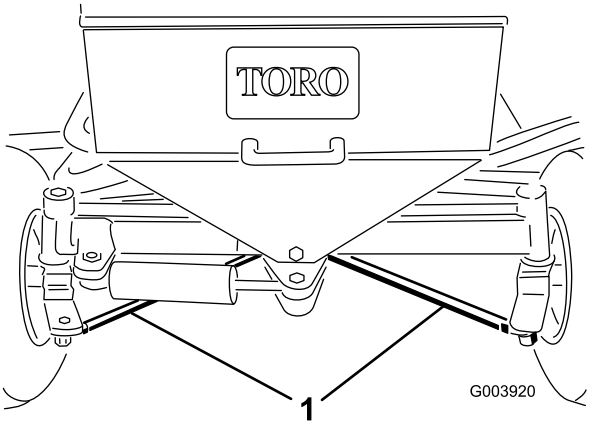

Figure 65

1. Tie rods

3. Adjust both tie rods equally until the center-to-center distance at the front of the rear wheels is 0 to 1/8 inch (0 to 3 mm) less than at the rear of the wheels.
4. When toe-in is correct, tighten the jam nuts against the tie rods.

Model 03544

1. Rotate the steering wheel so that the rear wheels are straight ahead.
2. Remove the cotter pin and slotted hex nut from either tie rod ball joint. Use a ball joint fork and remove the tie rod ball joint from the axle case support.
3. Loosen the clamps on both ends of the tie rod (Figure 66).

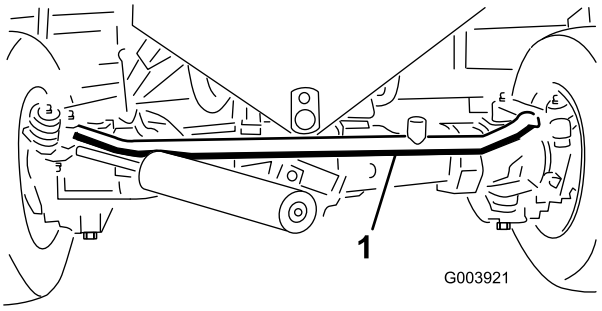

Figure 66

1. Tie rod

4. Rotate the detached ball joint inward or outward 1 complete revolution. Tighten the clamp at the loose end of the tie rod.
5. Rotate the entire tie rod assembly the same direction (inward or outward) 1 complete revolution. Tighten the clamp at the connected end of the tie rod.
6. Install the ball joint in the axle case support and tighten the slotted hex nut finger tight.
7. Measure the distance at the front and rear of the rear wheels at axle height. The distance at the front of the rear wheels should be 0 to 1/8 inch (0 to 3 mm) less than the distance measured at the rear of the wheels.
8. Repeat steps 3 through 7 if necessary.
9. Tighten the ball joint hex nut and install a new cotter pin.

Cooling System Maintenance

Removing Debris from the Cooling System

Remove debris from the screen, oil coolers, and radiator daily (clean more frequently in dirty conditions).

1. Turn the engine off and raise the hood.
2. Thoroughly clean all debris out of the engine area.
3. Loosen the clamps and pull up on the screen to slide it out of the mounting tracks (Figure 67).

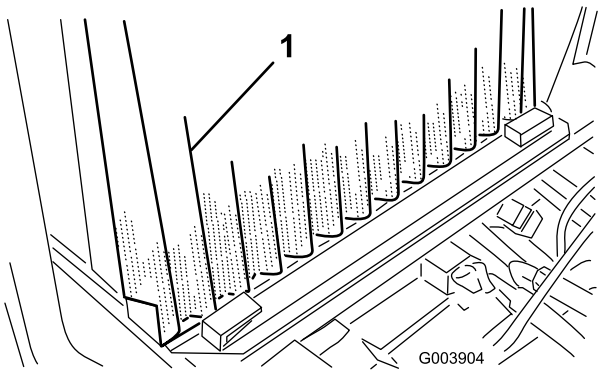

Figure 67

1. Screen

4. Clean the screen thoroughly with compressed air.
5. Slightly raise the oil coolers and pivot themforward (Figure 67).
6. Thoroughly clean both sides of the oil coolers and the radiator area with compressed air.
7. Pivot the oil coolers back into position.
8. Install the screen and close the hood.

Brake Maintenance

Adjusting the Service Brakes

Adjust the service brakes when there is more than 1 inch of free travel of the brake pedal, or when the brakes do not work effectively. Free travel is the distance the brake pedal moves before you feel braking resistance.

1. Disengage the locking pin from brake pedals so that both pedals work independently of each other.
2. To reduce free travel of the brake pedals, tighten the brakes by loosening the front nut on the threaded end of the brake cable (Figure 68).

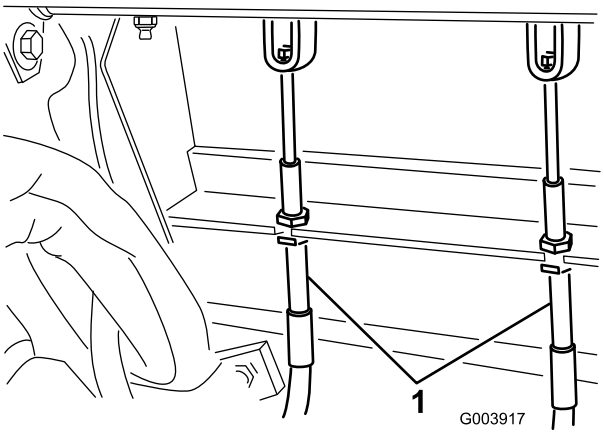

Figure 68

1. Brake cables

3. Tighten the rear nut to move the cable backward until brake pedals have 1/2 to 1 inch (1.25 to 2.5 cm) of free travel.
4. Tighten the front nuts.

Belt Maintenance

Check the condition and tension of all belts after the first day of operation and every 100 operating hours thereafter.

Tensioning the Alternator Belt

1. Open the hood.
2. Check the tension of the alternator belt by depressing it (Figure 69) midway between the alternator and the crankshaft pulleys with 22 lb (10 kg) of force.

   The belt should deflect 7/16 inch (11 mm). If the deflection is incorrect, proceed to step 3. If correct, continue operation.

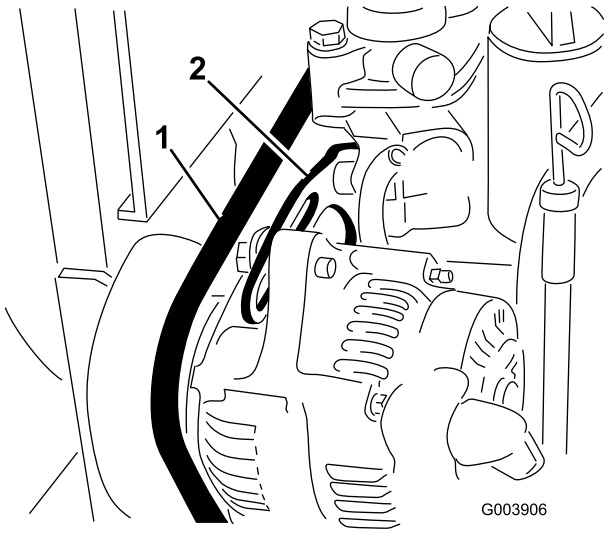

Figure 69

1. Alternator belt
2. Brace

3. Loosen the bolt securing the brace to the engine (Figure 69) and the bolt securing the alternator to the brace.
4. Insert a pry bar between the alternator and the engine and pry out on the alternator.
5. When you achieve the proper tension, tighten the alternator and brace bolts to secure the adjustment.

Tensioning the Cooling Fan Belt

1. Loosen the locknut on the belt tensioner lever (Figure 70).

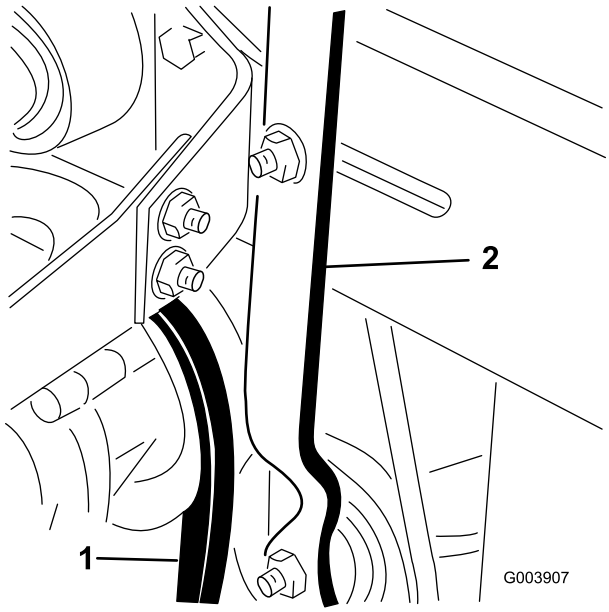

Figure 70

1. Cooling fan belt
2. Tensioner lever

2. Apply 5 to 10 lb (2.25 to 4.5 kg) of force at end of lever to set the proper tension on the fan belt.
3. Tighten the locknut to secure the adjustment.

Hydraulic System Maintenance

Changing the Hydraulic Fluid

Change hydraulic fluid after every 800 operating hours, in normal conditions. If fluid becomes contaminated, contact your local Toro distributor because the system must be flushed. Contaminated fluid looks milky or black when compared to clean oil.

1. Stop the engine and raise the hood.
2. Place a large drain pan under the drain plug under the hydraulic fluid reservoir (Figure 71).

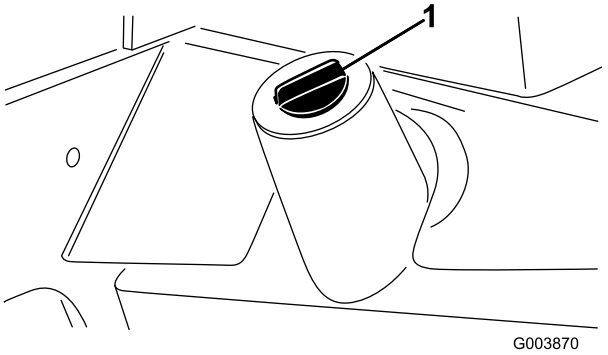

Figure 71

1. Hydraulic fluid reservoir

Remove the drain plug from the bottom of the hydraulic fluid reservoir (Figure 71) and let the hydraulic fluid flow into the drain pan.

3. Install and tighten the plug when hydraulic fluid stops draining.
4. Fill the reservoir with approximately 8.5 U.S. gallons (32 l) of hydraulic fluid; refer to Checking the Hydraulic Fluid in Operation, page 26.

   Important: Use only hydraulic fluids specified. Other fluids could cause system damage.
5. Install the reservoir cap.
6. Start the engine and use all of the hydraulic controls to distribute hydraulic fluid throughout the system. Also check for leaks.
7. Stop the engine.
8. Check the level of the hydraulic fluid and add enough to raise level to the Full mark on the dipstick.

   Important: Do not over-fill.

Replacing the Hydraulic Filter

The hydraulic system filter head is equipped with a service interval indicator. With the engine running, view the indicator, it should be in the Green zone. When the indicator is in the Red zone, the change the hydraulic filter.

Use the Toro replacement filter (Part No. 75-1310).

Important: Use of any other filter may void the warranty on some components.

1. Position the machine on a level surface, lower the cutting units, stop the engine, engage the parking brakes, and remove the key from the ignition switch.
2. Clean the area around the filter mounting area (Figure 72) and place drain pan under filter.

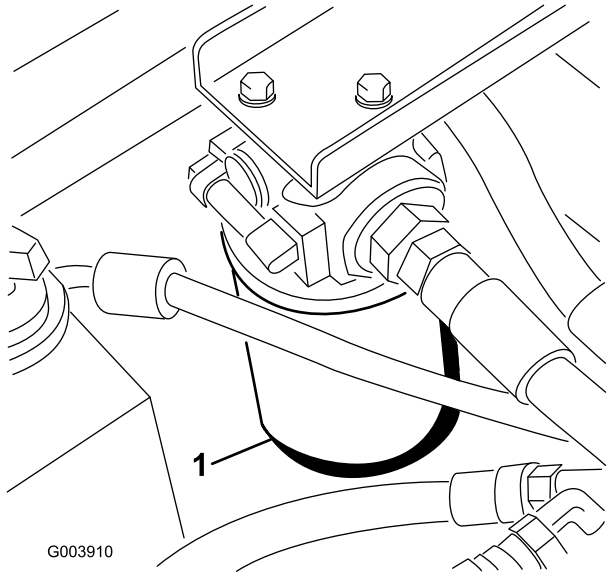

Figure 72

1. Hydraulic filter

3. Remove the filter.
4. Lubricate the gasket on the new filter with hydraulic oil.
5. Ensure that the filter mounting area is clean.
6. Install the filter by hand until the gasket contacts the mounting surface, then rotate it an additional 1/2 turn.
7. Start the engine and let it run for about two minutes to purge air from the system.
8. Stop the engine and check for leaks.

Checking the Hydraulic Lines and Hoses

Daily, check hydraulic lines and hoses for leaks, kinked lines, loose mounting supports, wear, loose fittings, weather deterioration, and chemical deterioration. Make all necessary repairs before operating.

Hydraulic fluid escaping under pressure can penetrate skin and cause injury.

- **Make sure all hydraulic fluid hoses and lines are in good condition and all hydraulic connections and fittings are tight before applying pressure to the hydraulic system.**
- **Keep your body and hands away from pin hole leaks or nozzles that eject high pressure hydraulic fluid.**
- **Use cardboard or paper to find hydraulic leaks.**
- **Safely relieve all pressure in the hydraulic system before performing any work on the hydraulic system.**
- **Get immediate medical help if fluid is injected into skin.**

Hydraulic System Test Ports

Use the hydraulic system test ports to test the pressure in the hydraulic circuits. Contact your local Toro distributor for assistance.

Use Test Port #1 (Figure 73) to assist in troubleshooting the hydraulic circuit for the front cutting units and lift cylinders.

Use Test Port #2 (Figure 73) to assist in troubleshooting the hydraulic circuit for the rear cutting units.

Use Test Port #3 (not shown—located on the rear of the hydrostatic transmission) used to measure the charge pressure of the transmission.

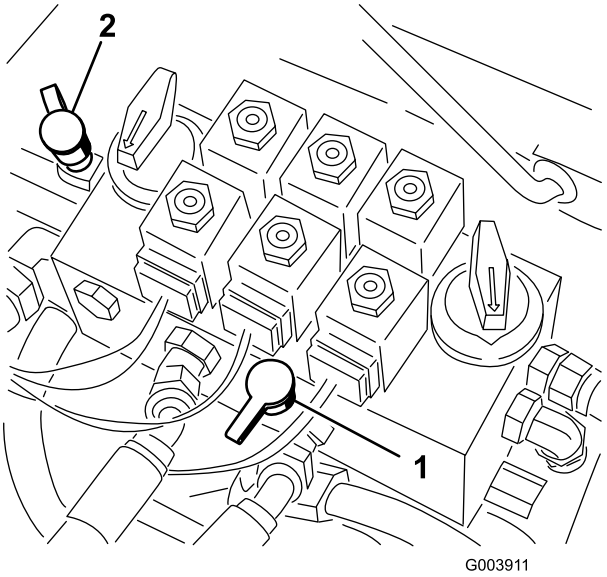

Figure 73

1. Test port #1
2. Test port #2

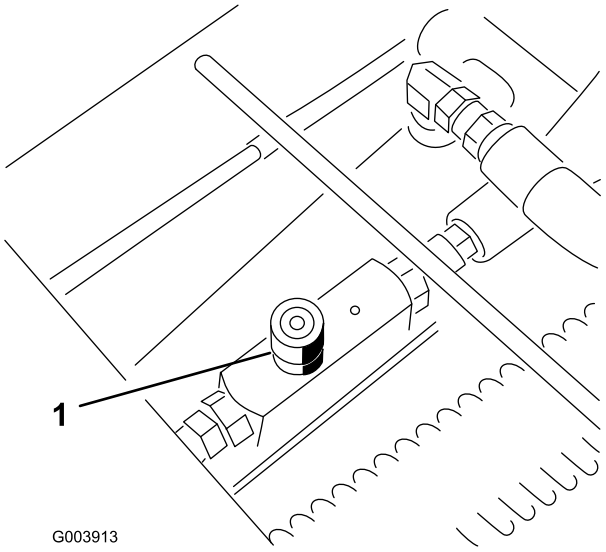

Figure 74

1. Center cutting unit adjustment valve

Cutting Unit System Maintenance

Adjusting the Cutting Unit Lift Rate

The cutting unit lift circuit is equipped with 3 adjustable valves used to ensure that the cutting units do not raise too quickly and bang against the lift stops. Adjust the cutting unit lift rate as follows:

Adjusting the Center Cutting Unit

1. Locate the valve behind the access panel above the operator's platform (Figure 74).
2. Loosen the setscrew on the valve and rotate the valve approximately 1/2 turn clockwise.
3. Verify the lift rate adjustment by raising and lowering the cutting unit several times. Adjust as required.
4. After attaining the desired lift rate, tighten the setscrew to lock the adjustment.

Adjusting the Outside Front Cutting Units

1. Locate the valve on the flow divider (under the foot rest) (Figure 75).

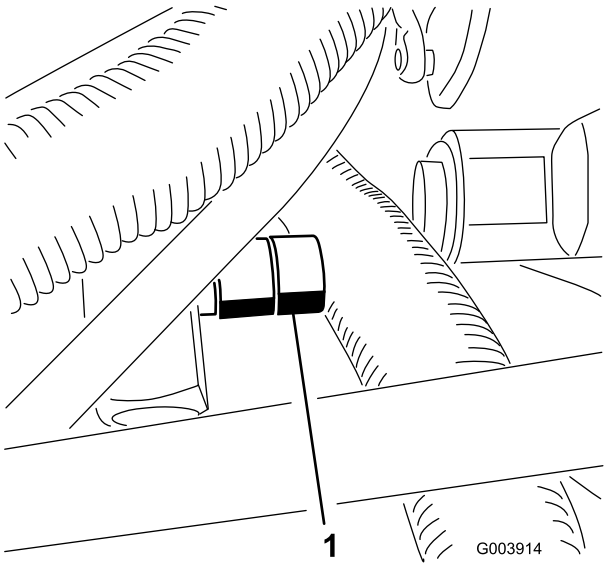

Figure 75

1. Outside front cutting units adjustment valve

2. Loosen the setscrew on the valve and rotate the valve approximately 1/2 turn clockwise.
3. Verify the lift rate adjustment by raising and lowering the cutting unit several times. Adjust as required.
4. After attaining the desired lift rate, tighten the setscrew to lock the adjustment.

Adjusting the Rear Cutting Units

1. Raise the hood and locate the valve on left, rear side of the machine (Figure 76).

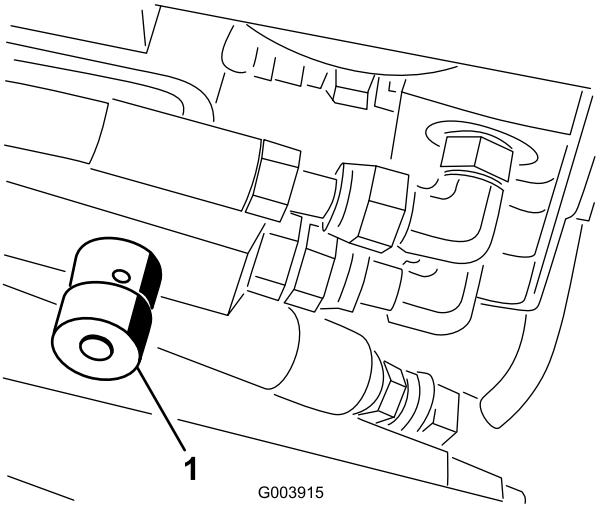

Figure 76

1. Rear cutting units adjustment valve

2. Loosen the setscrew on the valve and rotate the valve approximately 1/2 turn clockwise.
3. Verify the lift rate adjustment by raising and lowering the cutting unit several times. Adjust as required.
4. After attaining the desired lift rate, tighten the setscrew to lock the adjustment.

Backlapping the Cutting Units

Contact with the reels or other moving parts can result in personal injury.

- **Keep fingers, hands, and clothing away from the reels or other moving parts.**
- **Never attempt to turn the reels by hand or foot while the engine is running.**

Note: When backlapping, the front units all operate together, and the rear units operate together.

1. Position the machine on a level surface, lower the cutting units, stop the engine, engage the parking brake, and move the Enable/Disable switch to disable position.
2. Unlock and raise the seat to expose the controls.
3. Make initial reel to bedknife adjustments appropriate for backlapping on all cutting units which are to be backlapped; refer to the cutting unit *Operator's Manual*.
4. Start the engine and run at idle speed.

Changing the engine speed while backlapping may cause the reels to stall.

- **Never change the engine speed while backlapping.**
- **Only backlap at idle engine speed.**

5. Set both reel speed controls to position 11.
6. Select either front or rear on the backlap switch to determine which units to backlap.

To avoid personal injury, be certain that you are clear of the cutting units before proceeding.

7. Move the Enable/Disable switch to the Enable position. Move the Lower Mow/Lift control forward to start the backlapping operation on the designated reels.
8. For the cutting units being backlapped, move the reel speed control to position 1.
9. Apply lapping compound with the long handle brush supplied with machine. Never use a short handled brush.
10. If the reels stall or become erratic while backlapping, select a higher speed setting until the speed stabilizes, then return the reel speed to setting 1 or to your desired speed.
11. To make an adjustment to the cutting units while backlapping, turn the reels off by moving the Lower Mow/Raise lever rearward; the

Enable/Disable switch to the Disable position, and stop the engine. After completing adjustments, repeat steps 5 through 10.

12. Repeat the procedure for all cutting units you want to backlap.
13. When finished, return the backlap switch to the Off position, lower the seat, tighten both locking bolts securely, and wash all lapping compound off of the cutting units. Adjust cutting unit reel to bedknife as needed.

Important: If the backlap switch is not returned to the Off position after backlapping, the cutting units will not raise or function properly.

Storage

Preparing the Traction Unit

1. Thoroughly clean the traction unit, cutting units, and engine.
2. Check the tire pressure. Inflate all traction unit tires to 15 to 20 psi (103 to 138 kPa).
3. Check all fasteners for looseness and tighten them as necessary.
4. Grease all grease fittings and pivot points. Wipe up any excess lubricant.
5. Lightly sand and use touch-up paint on painted areas that are scratched, chipped, or rusted. Repair any dents in the metal body.
6. Service the battery and cables as follows:
   A. Remove the battery terminals from the battery posts.
   B. Clean the battery, terminals, and posts with a wire brush and baking soda solution.
   C. Coat the cable terminals and battery posts with Grafo 112X skin-over grease (Toro Part No. 505-47) or petroleum jelly to prevent corrosion.
   D. Slowly recharge the battery every 60 days for 24 hours to prevent lead sulfation of the battery.

Preparing the Engine

1. Drain the engine oil from the oil pan and replace the drain plug.
2. Remove and discard the oil filter. Install a new oil filter.
3. Refill the oil pan with 4 quarts of motor oil.
4. Start the engine and run it at idle speed for approximately two minutes.
5. Stop the engine.
6. Thoroughly drain all fuel from the fuel tank, lines, and the fuel filter/water separator assembly.
7. Flush the fuel tank with fresh, clean diesel fuel.
8. Secure all fuel system fittings.
9. Thoroughly clean and service the air cleaner assembly.
10. Seal the air cleaner inlet and the exhaust outlet with weatherproof tape.
11. Check the antifreeze protection and add as needed for expected minimum temperature in your area.

Schematics

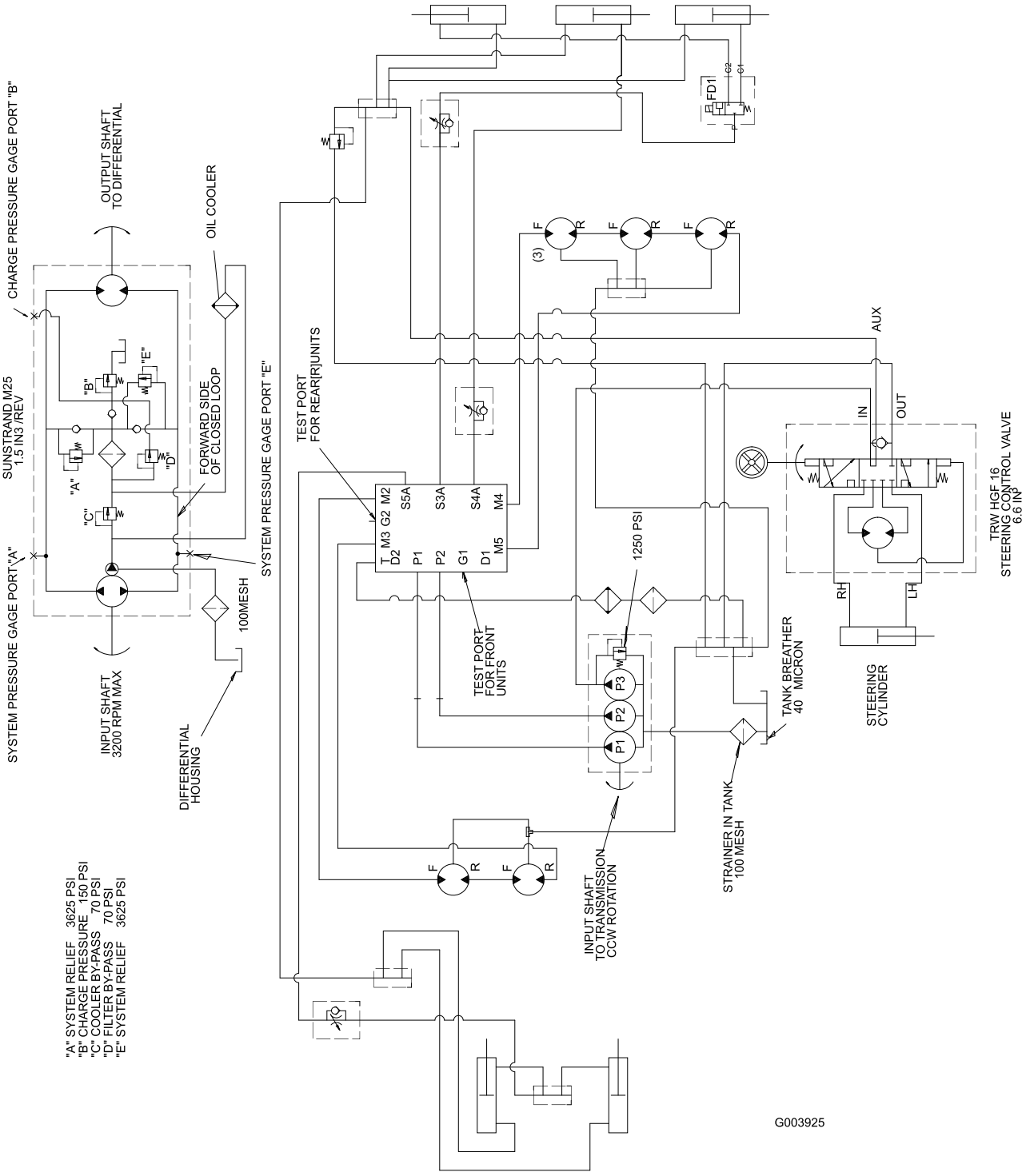

Hydraulic Schematic (Rev. -)

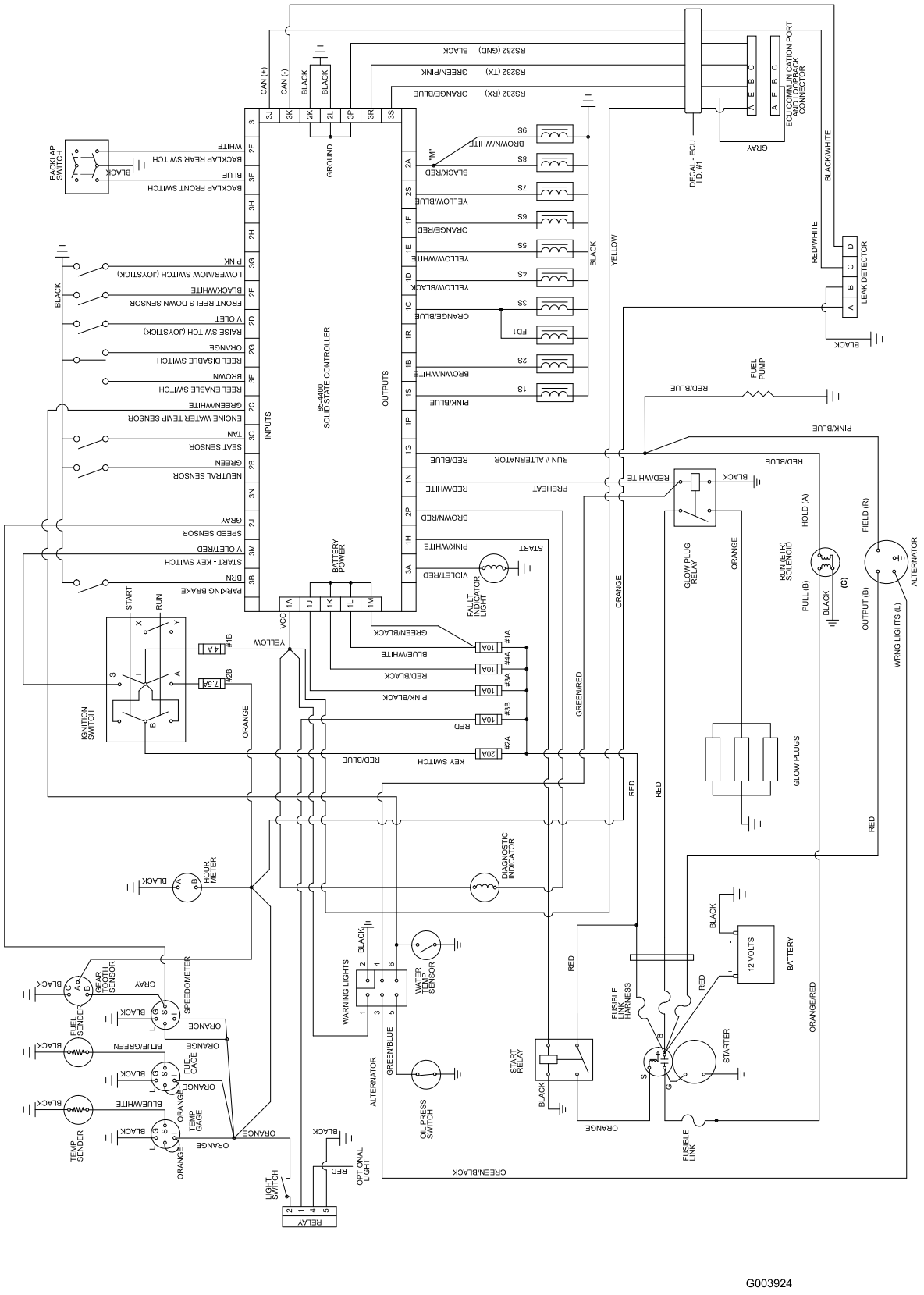

Electrical Schematic (Rev. -)

The Toro General Commercial Products Warranty

A Two-Year Limited Warranty

Conditions and Products Covered

The Toro® Company and its affiliate, Toro Warranty Company, pursuant to an agreement between them, jointly warrant your Toro Commercial Product (“Product") to be free from defects in materials or workmanship for two years or 1500 operational hours*, whichever occurs first. Where a warrantable condition exists, we will repair the Product at no cost to you including diagnosis, labor, parts, and transportation. This warranty begins on the date the Product is delivered to the original retail purchaser.

Product equipped with hour meter

Instructions for Obtaining Warranty Service

You are responsible for notifying the Commercial Products Distributor or Authorized Commercial Products Dealer from whom you purchased the Product as soon as you believe a warrantable condition exists.

If you need help locating a Commercial Products Distributor or Authorized Dealer, or if you have questions regarding your warranty rights or responsibilities, you may contact us at:

Toro Commercial Products Service Department

Toro Warranty Company

8111 Lyndale Avenue South

Bloomington, MN 55420-1196

952-888-8801 or 800-982-2740

E-mail: commercial.service@Toro.com

Owner Responsibilities

As the Product owner, you are responsible for required maintenance and adjustments stated in your *Operator’s Manual*. Failure to perform required maintenance and adjustments can be grounds for disallowing a warranty claim.

Items and Conditions Not Covered

Not all product failures or malfunctions that occur during the warranty period are defects in materials or workmanship. This express warranty does not cover the following:

- Product failures which result from the use of non-Toro replacement parts, or from installation and use of add-on, modified, or unapproved accessories
- Product failures which result from failure to perform required maintenance and/or adjustments
- Product failures which result from operating the Product in an abusive, negligent or reckless manner
- Parts subject to consumption through use unless found to be defective. Examples of parts which are consumed, or used up, during normal Product operation include, but are not limited to, blades, reels, bedknives, tines, spark plugs, castor wheels, tires, filters, belts, and certain sprayer components such as diaphragms, nozzles, and check valves, etc.
- Failures caused by outside influence. Items considered to be outside influence include, but are not limited to, weather, storage practices, contamination, use of unapproved coolants, lubricants, additives, or chemicals, etc.
- Normal “wear and tear" items. Normal “wear and tear" includes, but is not limited to, damage to seats due to wear or abrasion, worn painted surfaces, scratched decals or windows, etc.

Parts

Parts scheduled for replacement as required maintenance are warranted for the period of time up to the scheduled replacement time for that part.

Parts replaced under this warranty become the property of Toro. Toro will make the final decision whether to repair any existing part or assembly or replace it. Toro may use factory remanufactured parts rather than new parts for some warranty repairs.

General Conditions

Repair by an Authorized Toro Distributor or Dealer is your sole remedy under this warranty.

Neither The Toro® Company nor Toro Warranty Company is liable for indirect, incidental or consequential damages in connection with the use of the Toro Products covered by this warranty, including any cost or expense of providing substitute equipment or service during reasonable periods of malfunction or non-use pending completion of repairs under this warranty. Except for the Emissions warranty referenced below, if applicable, there is no other express warranty. All implied warranties of merchantability and fitness for use are limited to the duration of this express warranty.

Some states do not allow exclusions of incidental or consequential damages, or limitations on how long an implied warranty lasts, so the above exclusions and limitations may not apply to you.

This warranty gives you specific legal rights, and you may also have other rights which vary from state to state.

Note regarding engine warranty: The Emissions Control System on your Product may be covered by a separate warranty meeting requirements established by the U.S. Environmental Protection Agency (EPA) and/or the California Air Resources Board (CARB). The hour limitations set forth above do not apply to the Emissions Control System Warranty. Refer to the Engine Emission Control Warranty Statement printed in your operator’s manual or contained in the engine manufacturer’s documentation for details.

Countries Other than the United States or Canada

Customers who have purchased Toro products exported from the United States or Canada should contact their Toro Distributor (Dealer) to obtain guarantee policies for your country, province, or state. If for any reason you are dissatisfied with your Distributor’s service or have difficulty obtaining guarantee information, contact the Toro importer. If all other remedies fail, you may contact us at Toro Warranty Company.