FORM NO. 3314-139

TORO®

MODEL NO. 20680-0000001 & UP

PARTS CATALOG

21" S.P. REAR BAGGER

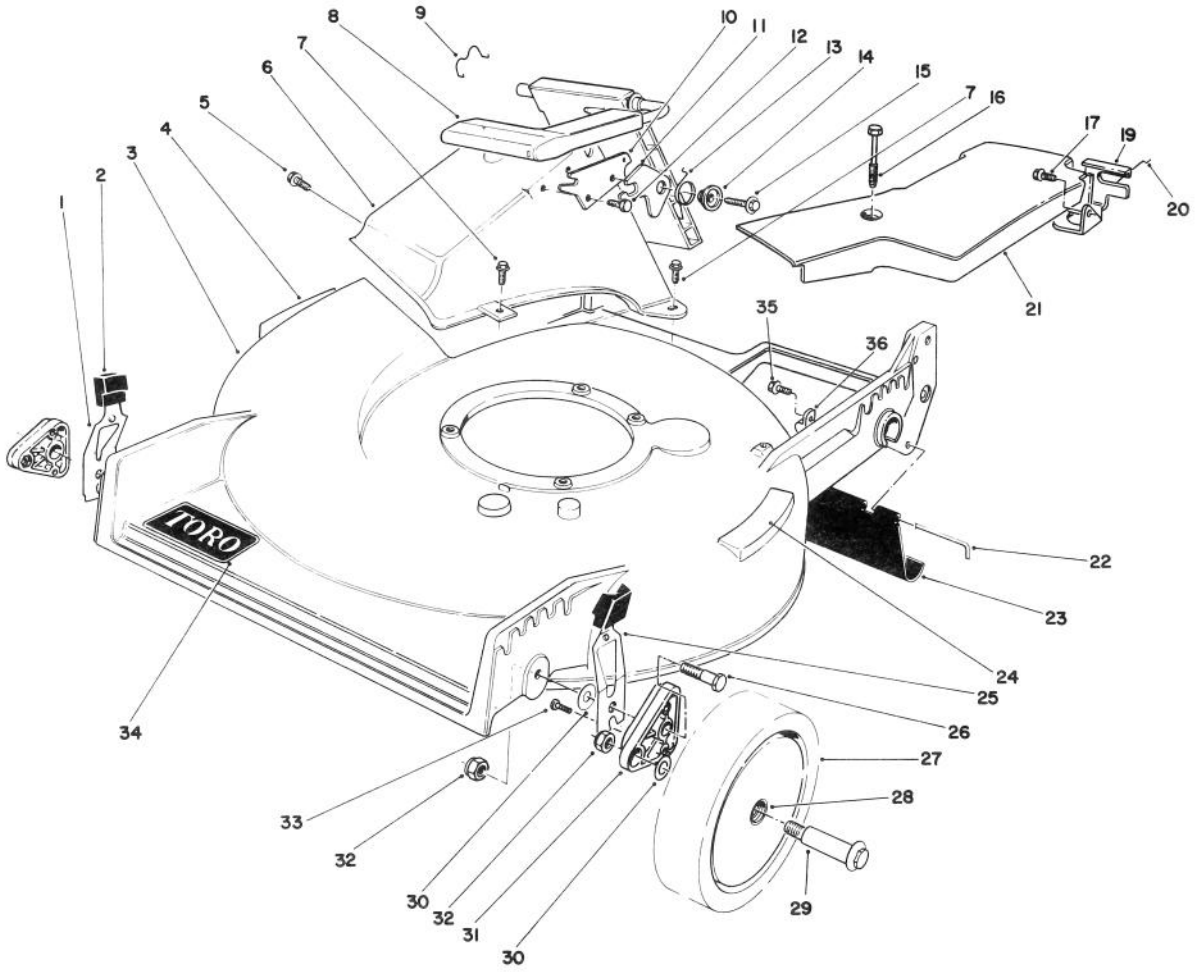

C-0513-90

HOUSING ASSEMBLY

Ref. No.	Part No.	Description	No. Used
1	71-0560	Spring Arm Assy. — R.H.	1
2	25-7740	Knob — Arm	2
3	13-4659	Housing (Incl. Ref. #4, 7, & 24)	1
4	39-5770	Decal — Danger	1
5	46-6810	Screw — Washer Assembly	1
6	46-3501	Tunnel — Discharge	1
7	46-6811	Screw — Thread Forming Hex Washer Hd.	3
8	51-0201	Discharge Door Assembly	1
9	47-5840	Door — Retainer	1
10	23-1040	Plate — Latch	1
11	42-4010	Latch — Safety	1
12	46-8090	Screw — Self Tapping Hex Washer Hd.	1
13	33-4860	Spring — Torsion	1
14	43-4840	Spacer — Latch	1

Ref. No.	Part No.	Description	No. Used
15	46-8091	Screw — Hex Washer Hd.	1
16	37-7260	Capscrew — Special	2
17	32144-70	Screw — Thread Forming Hex Washer Hd.	1
19	62-3940	Bracket — Traction Adj.	1
20	46-7030	Retainer — Cable	1
21	62-4314	Cover — Belt	1
22	33-3208	Rod — Shield	1
23	44-0580	Shield — Trailing	1
25	71-0570	Spring Arm Assy. — L.H.	1
26	66-0561	Screw — Shoulder	2
27	11-9509	Wheel & Tire Assembly (Incl. Ref. #28)	2
28	27-6250	Bushing — Wheel	2
29	27-6231	Bolt — Wheel	2
30	40-1940	Washer — Wheel Bolt	4
31	66-0580	Arm — Pivot	2

©The Toro Company — 1989

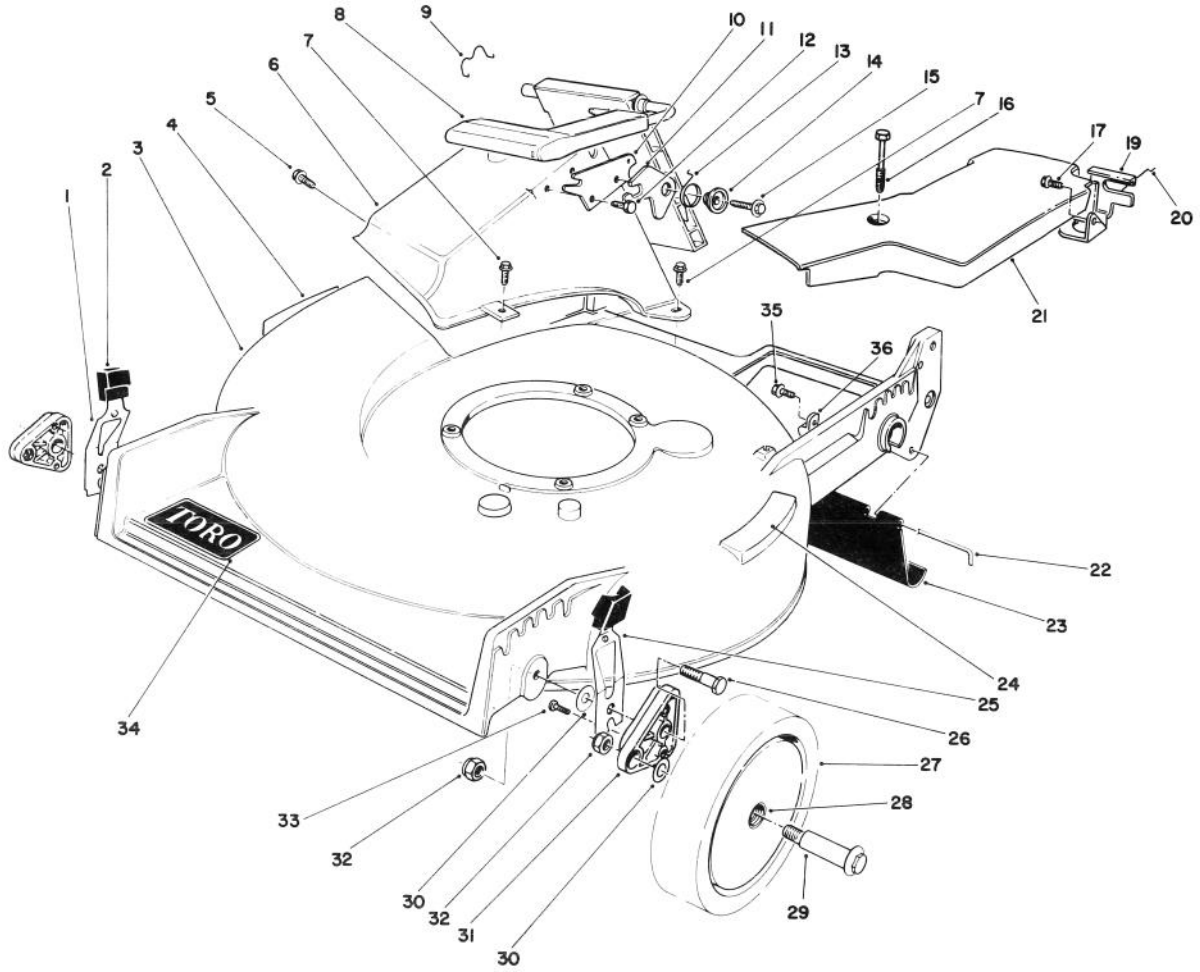

C-0513

HOUSING ASSEMBLY (CONTINUED)

Ref. No.	Part No.	Description	No. Used
32	52-3620	Locknut	4
33	32144-85	Screw - Thread Forming	2
34	71-0600	Decal - Toro	1

Ref. No.	Part No.	Description	No. Used
35	12-5450	Screw - Self Tapping	1
36	2412-83	R-Clamp	1

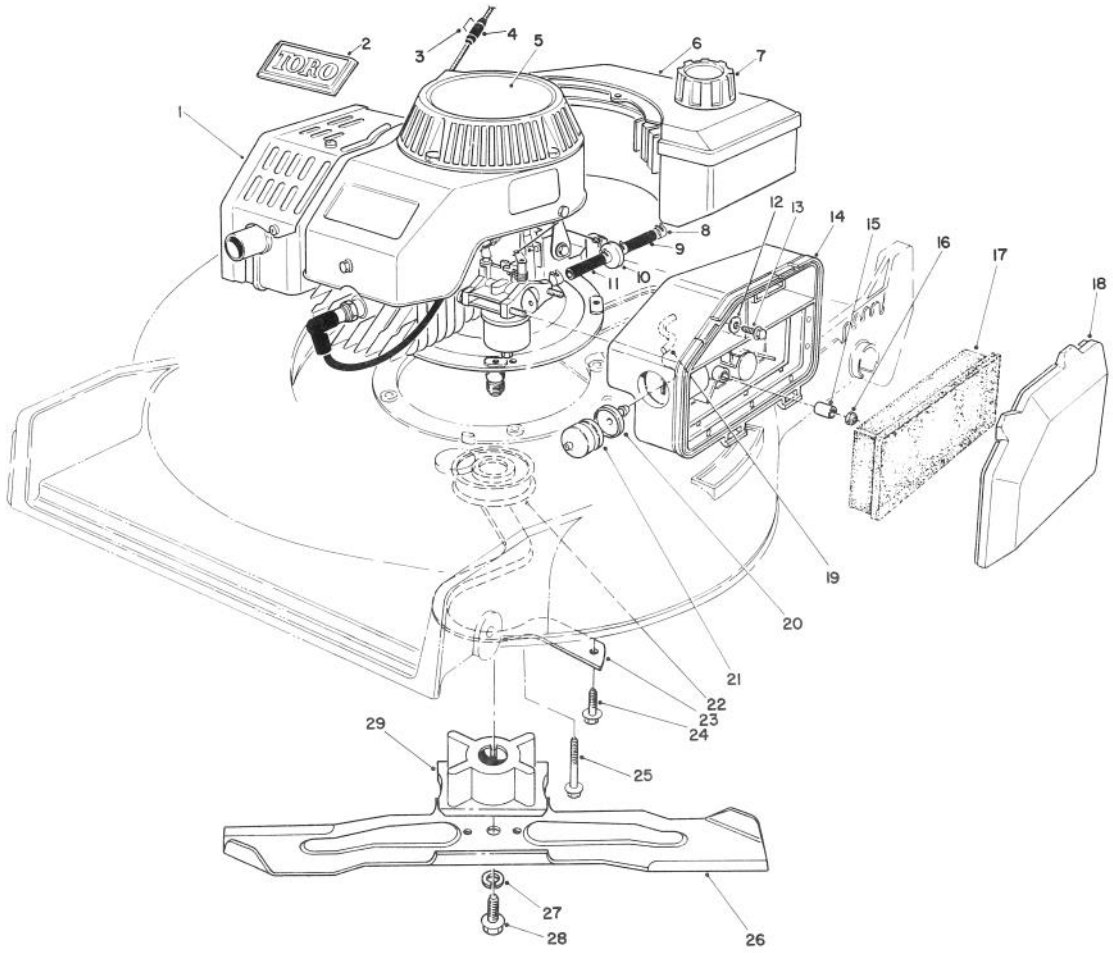

C-0520

ENGINE ASSEMBLY

Ref. No.	Part No.	Description	No. Used
1	51-0413	Engine (Complete)	1
2	46-8290	Plate — Toro Logo	1
†3		Staple	1
4	81-3980	Stop — Rope	1
5	66-0510	Decal — Recoil	1
6	81-0042	Fuel Tank Assembly	1
7	55-3575	Gas Cap Assembly	1
8	2412-95	Clamp — Fuel Line	4
9	51-3216	Line — Fuel	1
10	56-6360	Filter — Fuel	1
11	51-3215	Line — Fuel	1
12	3256-16	Washer — Flat	1
13	51-2690	Screw — Hex Washer Hd.	1
14	63-9330	Air Cleaner	1
15	62-3980	Sleeve	2

Ref. No.	Part No.	Description	No. Used
16	50-7180	Nut — Lock	2
17	63-9380	Foam Element — Air Cleaner	1
18	63-9340	Cover — Air Cleaner	1
19	44-3172	Hose — Primer	1
20	44-2750	Body — Primer	1
21	66-7460	Bulb — Primer	1
22	62-7550	Pulley — Driver	1
23	40-5720	Guide — Belt	1
24	49-2040	Screw — Hex Washer Hd. Thread Forming	2
25	66-9300	Screw — Hex Flange Hd.	3
26	42-1000	Blade — 21"	1
27	3253-22	Washer — Lock	1
28	26-0670	Screw — Blade	1
29	62-7540	Retainer — Blade	1

† Obtain Locally

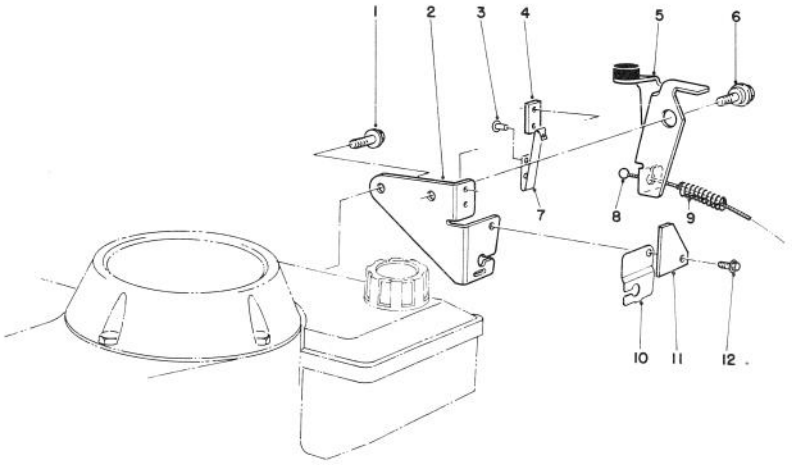

C-0185

BRAKE ASSEMBLY

Ref. No.	Part No.	Description	No. Used
1	46-0790	Screw - Self Tapping	1
2	53-4620	Plate - Mounting	1
3	3290-459	Rivet	2
4	60-9020	Strap - Insulation	1
5	66-5380	Brake Plate Assembly	1
6	56-6190	Screw - Shoulder, Metric	1

Ref. No.	Part No.	Description	No. Used
7	60-9010	Strap - Ground	1
8	56-6091	Cable - Brake	1
9	66-5370	Spring - Compression	1
10	53-4610	Clamp - Cable	1
11	53-4690	Stop - Ground Strap	1
12	12-5450	Screw - Self Tapping	1

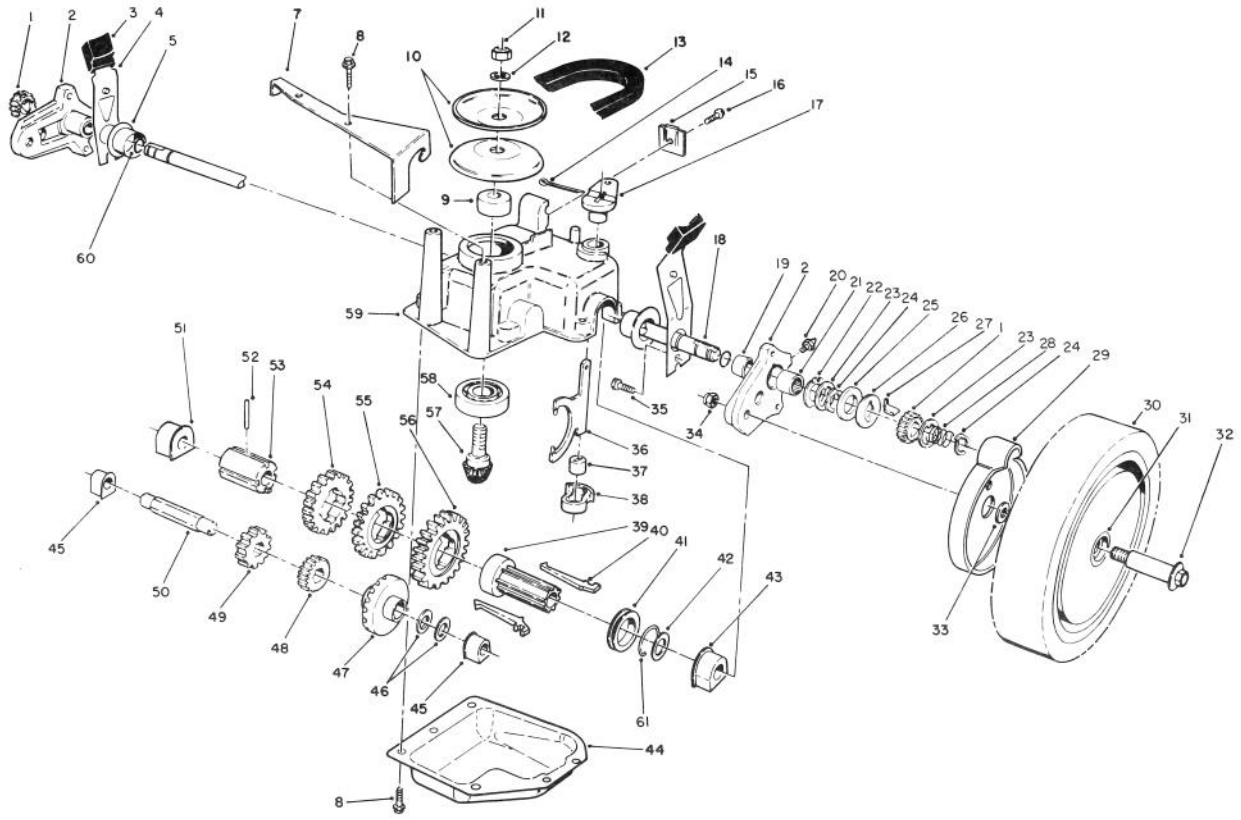

C-0521

GEAR CASE ASSEMBLY

Ref. No.	Part No.	Description	No. Used
1	65-4750	Pinion	2
2	63-8701	Pivot Arm Assembly (Incl. Ref. #19-21)	2
3	25-7740	Knob — Arm	2
4	63-8720	Spring Arm Assembly	2
5	42-3520	Cap — End	2
7	62-4320	Bracket — Belt Guide	1
8	49-2040	Screw — Self Tapping	8
9	62-6660	Spacer	1
10	60-8840	Pulley — Half	2
11	3296-5	Nut — Lock	1
12	3256-24	Washer — Flat	1
13	62-3900	V-Belt	1
14	3272-10	Pin — Cotter	1
15	46-5610	Clamp — Cable	1
16	32144-70	Screw — Thread Forming	1
17	60-8820	Lever — Shift	1
18	65-4770	Shaft — Output	1
19	70-9760	Bushing	2
20	302-56	Fitting — Grease	2
21	48-2060	Bearing — Needle	2
22	65-4730	Washer — Thrust (Inner)	2
23	65-4740	Washer — Thrust (Keyed)	4
24	65-2720	Ring — Retaining	4
25	65-4710	Ring — Friction	2

Ref. No.	Part No.	Description	No. Used
26	65-4760	Washer — Clutch	2
27	66-6050	Key — Rocking (L.H.)	1
*	66-6040	Key — Rocking (R.H.)	1
28	65-4720	Spring — Compression	2
29	74-1660	Cover — Wheel	2
30	11-9519	Wheel Tire & Gear Assembly (Incl. Ref. #32)	2
31	27-6250	Bushing — Wheel	4
32	27-6231	Bolt — Wheel	2
33	74-1670	Spacer — Wheel Cover	2
34	52-3620	Nut — Lock	2
35	32144-85	Screw	2
36	60-8870	Yoke — Shift	1
37	29-9570	Bushing — Yoke	1
38	60-8810	Retainer — Shift Fork	1
39	76-0780	Sleeve — Shift Key	1
40	76-0760	Key — Shift	2
41	76-0770	Collar — Shift	1
42	36-4780	Washer — Thrust	1
43	60-8770	Bushing — Output Shaft	1
44	60-8730	Cover — Gear Case	1
45	60-8750	Bushing — Int. Shaft	2
46	36-4791	Washer — Thrust	2
47	55-3760	Gear — Pinion 15T	1
48	55-3780	Gear — Pinion 20T	1

* Not Illustrated

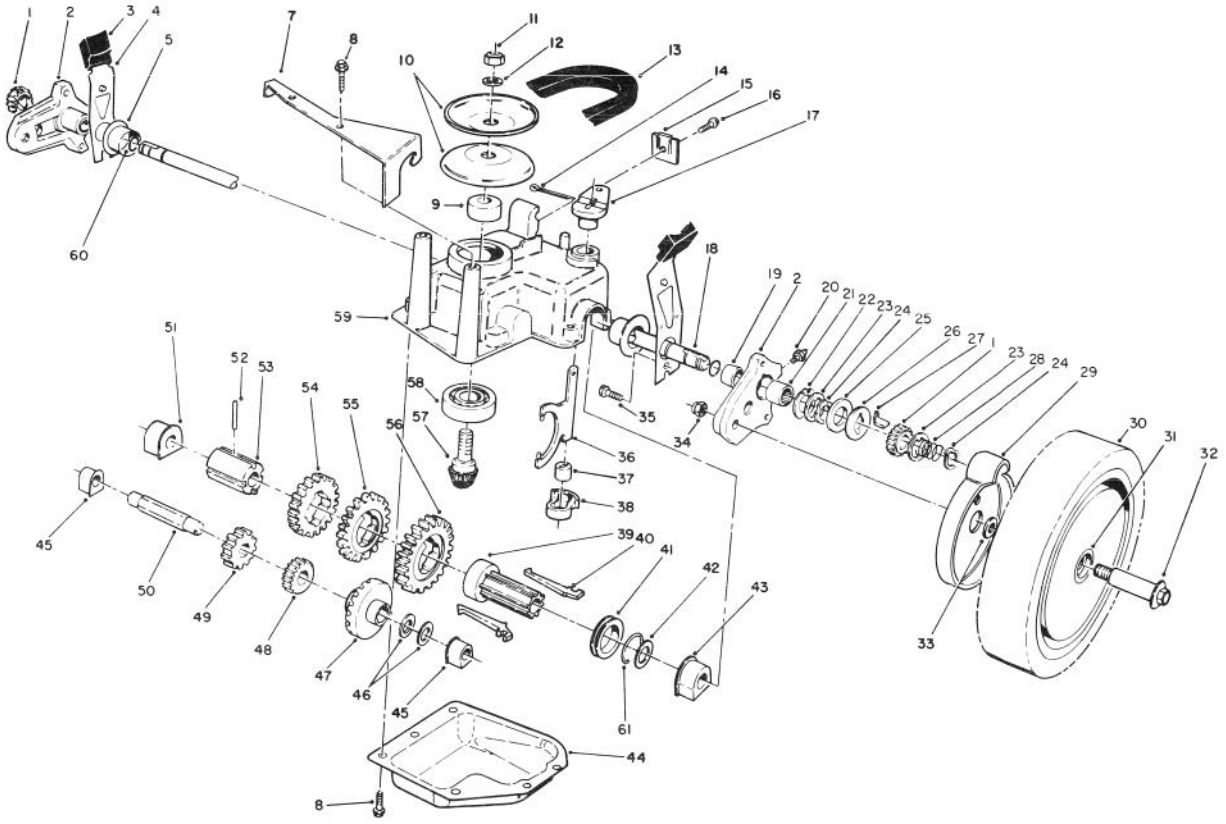

C-0521

GEAR CASE ASSEMBLY (CONTINUED)

Ref. No.	Part No.	Description	No. Used
49	55-3800	Gear - Pinion 25T	1
50	60-8800	Shaft - Intermediate	1
51	60-8850	Bushing - Output Shaft	1
52	32121-120	Pin - Coil	1
53	60-8790	Sleeve - Gear	1
54	55-3810	Gear - 39T (3rd Gear)	1
55	55-3790	Gear - 44T (2nd Gear)	1

Ref. No.	Part No.	Description	No. Used
56	55-3770	Gear - 49T (1st Gear)	1
57	60-8890	Pinion - Bevel	1
58	38-7820	Bearing - Ball	1
59	60-8710	Case - Gear (Upper)	1
60	237-153	O-Ring	2
61	65-5250	Clip - Spring	1
*	62-6673	Gear Case Assy. Complete	1

*Not Illustrated

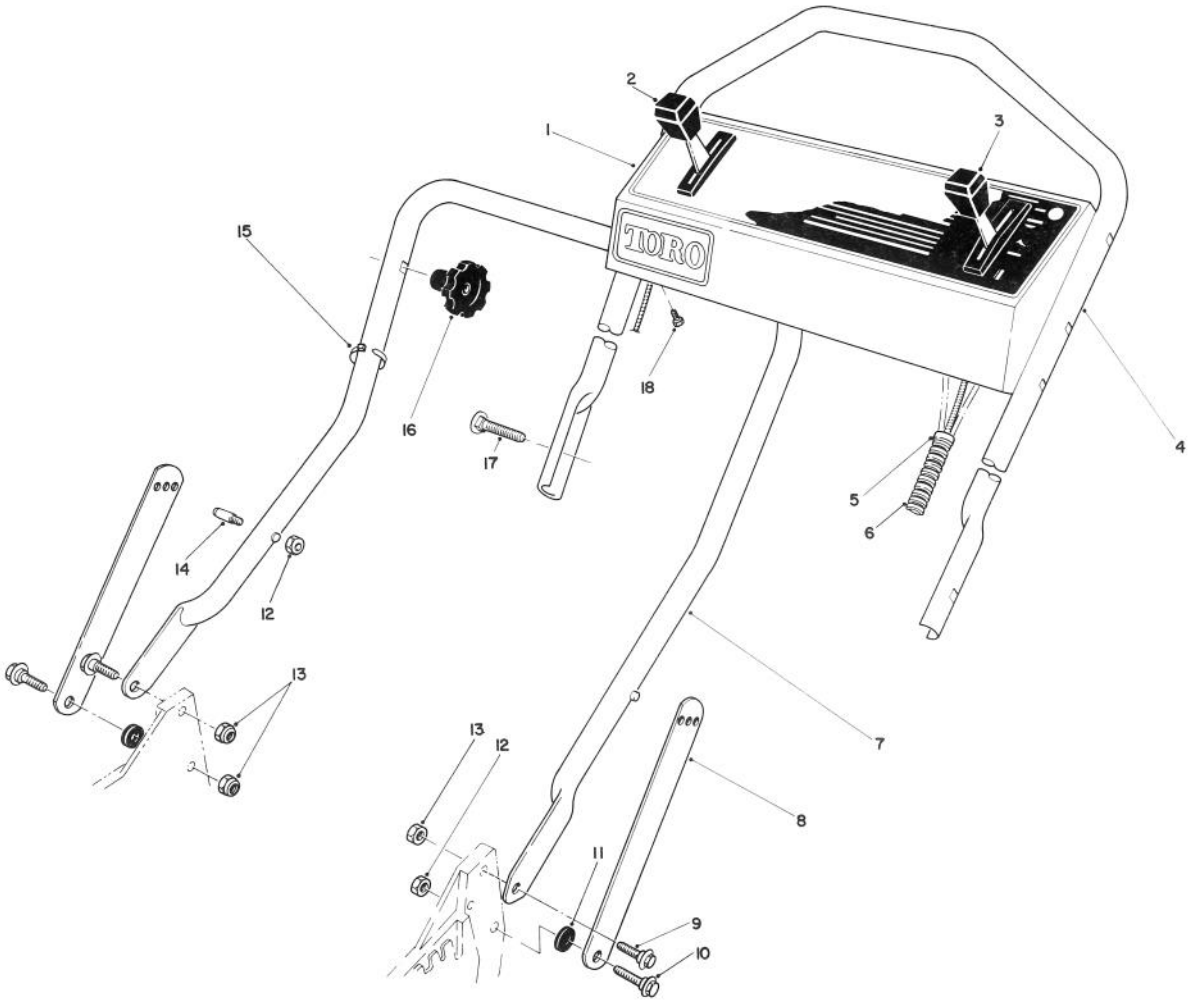

HANDLE ASSEMBLY

Ref. No.	Part No.	Description	No. Used
1	74-3500	Panel — Control	1
2	76-2720	Control — Ground Speed (Bend Type #1) (Sheath Lg. 42-1/4") (Wire Lg. 3-1/8")	1
3	49-4197	Control — Throttle (Bend Type #2) (Sheath Lg. 54-1/4") (Wire Lg. 2-3/8")	1
4	46-5411	Handle — Upper	1
5	2412-50	Clip — Convoluted Tubing	4
6	46-6440	Cover — Control Cables	1

Ref. No.	Part No.	Description	No. Used
7	43-1361	Lower Handle Assembly	1
8	43-1370	Latch — Handle	2
9	27-7211	Screw — Shoulder	2
10	27-7210	Screw — Shoulder	2
11	3-3287	Spacer — Handle Latch	2
12	3296-47	Locknut	3
13	3296-29	Locknut	3
†14	49-2750	Pin — Handle	2
15	3290-378	Cable Tie	2
16	19-4050	Knob — Handle Release	2
†17	17-9421	Screw — Handle	2
18	32104-76	Screw — Self Tapping Slotted	5

† Service Replacement Parts

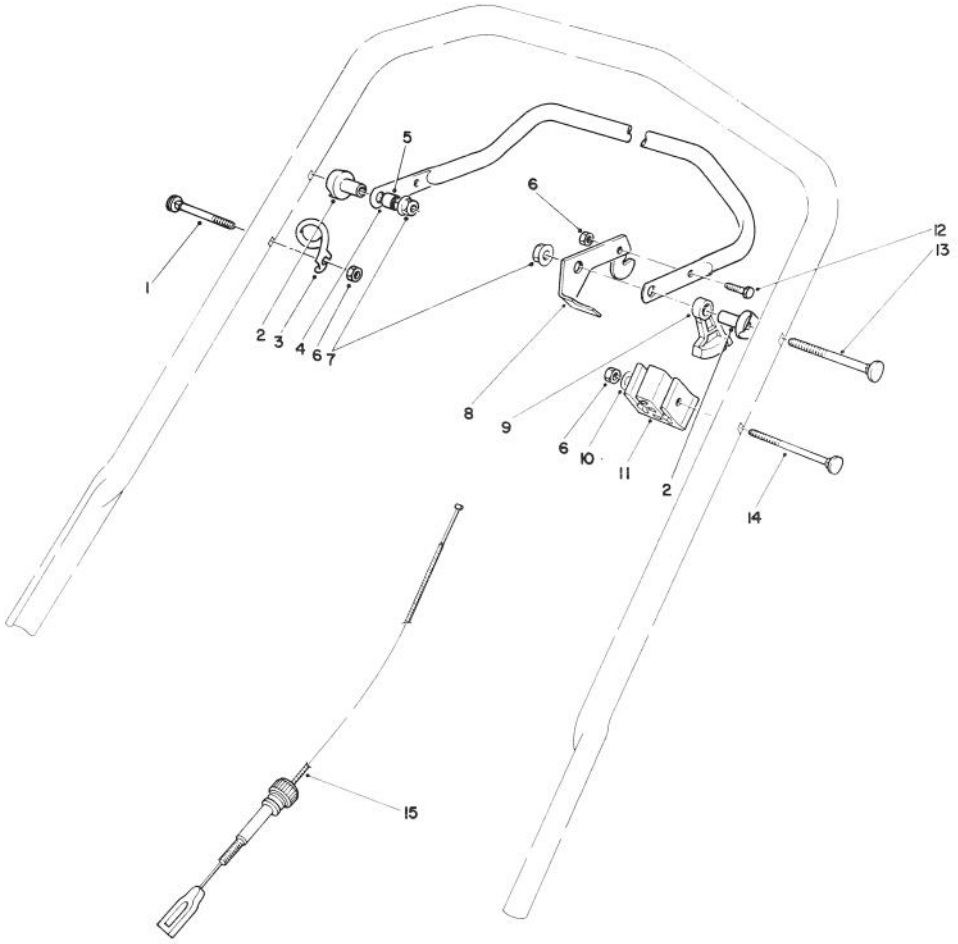

C-0523

TRACTION CONTROL ASSEMBLY

Ref. No.	Part No.	Description	No. Used
1	46-6433	Screw - Handle	1
2	49-1630	Support - Spacer	2
3	46-8080	Guide - Rope	1
4	52-7430	Control Bar Assembly	1
5	256-276	Spacer - Nylon	1
6	3296-42	Nut - Lock	3
7	3296-58	Nut - Flange Lock	2
8	66-5350	Lever - Control	1

Ref. No.	Part No.	Description	No. Used
9	46-5520	Lever - Traction	1
10	3256-22	Washer - Plain	1
11	46-6980	Support - Cable	1
12	321-3	Screw - Hex Hd. Cap	1
13	17-9421	Screw - Handle	2
14	46-6434	Screw - Handle	1
15	46-5481	Cable - Traction	1

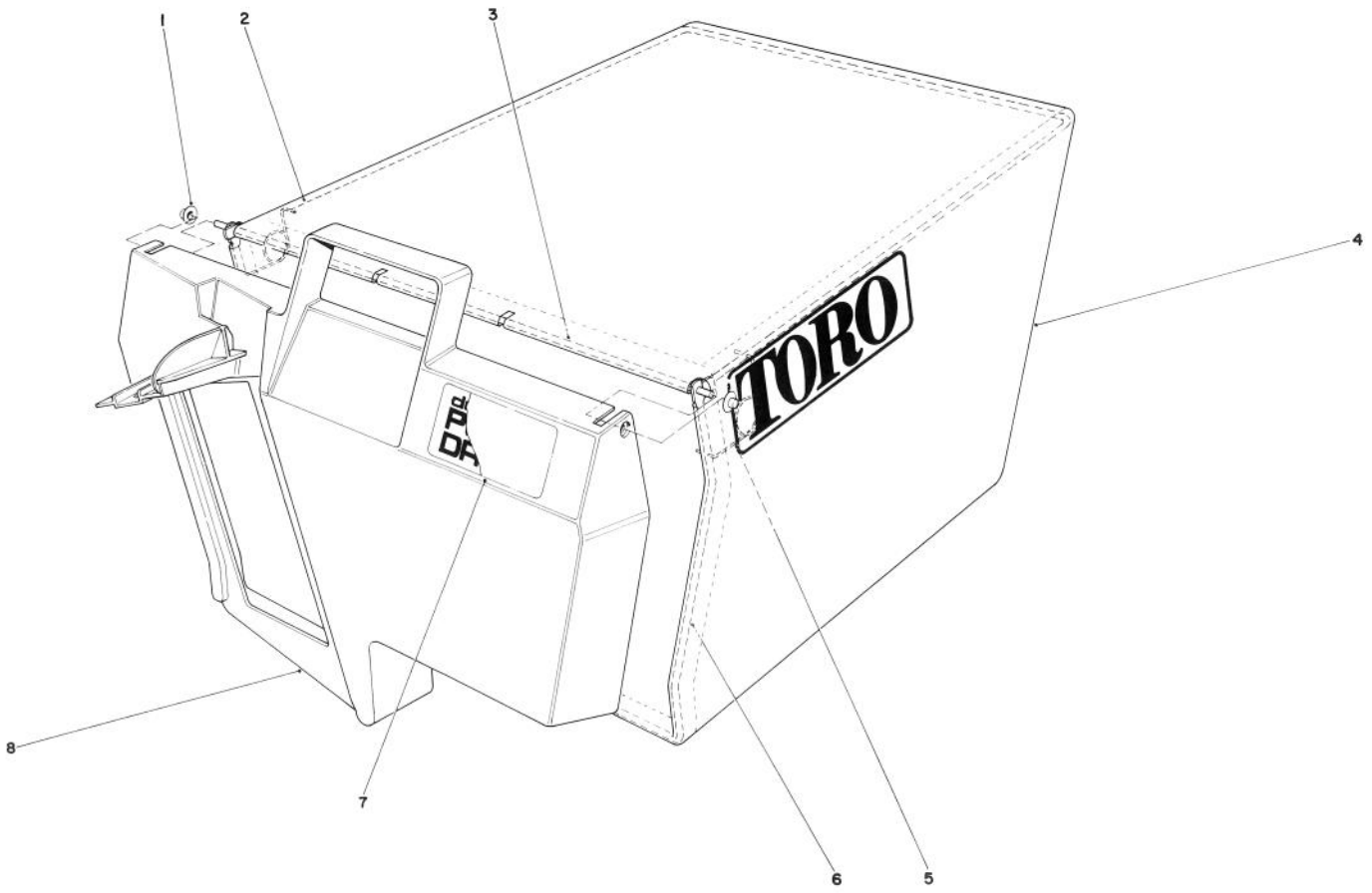

C-0331

GRASS BAG ASSEMBLY 11-0189

Ref. No.	Part No.	Description	No. Used
1	3290-422	Nut - Push	2
2	42-4030	Bag Frame - Upper	1
3	33-4820	Hinge - Bag Door	1
4	8-2759	Bag - Grass	1

Ref. No.	Part No.	Description	No. Used
5	36-6910	Spring	2
6	42-4020	Frame - Bag	1
7	66-2150	Decal - Bag Door	1
8	37-1393	Door - Grass Bag	1

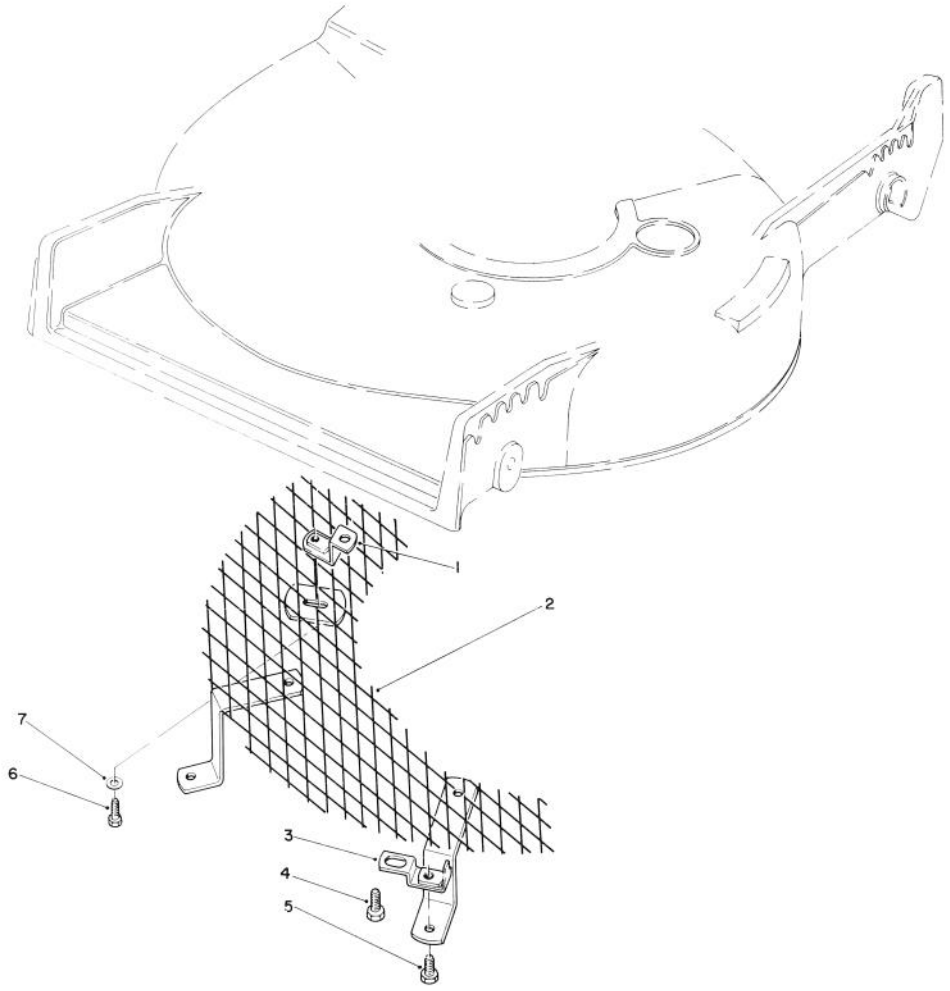

C-302-90

LEAF SHREDDER KIT MODEL NO 59157 (OPTIONAL)

Ref. No.	Part No.	Description	No. Used
1	47-6260	Bracket	1
2	47-6230	Screen	1
3	46-4880	Bracket - Mounting	2
4	32144-11	Self Tapping Screw	3
5	321-3	Hex Hd. Capscrew	2
6	321-5	Hex Hd. Capscrew	1
7	3256-1	Washer	1

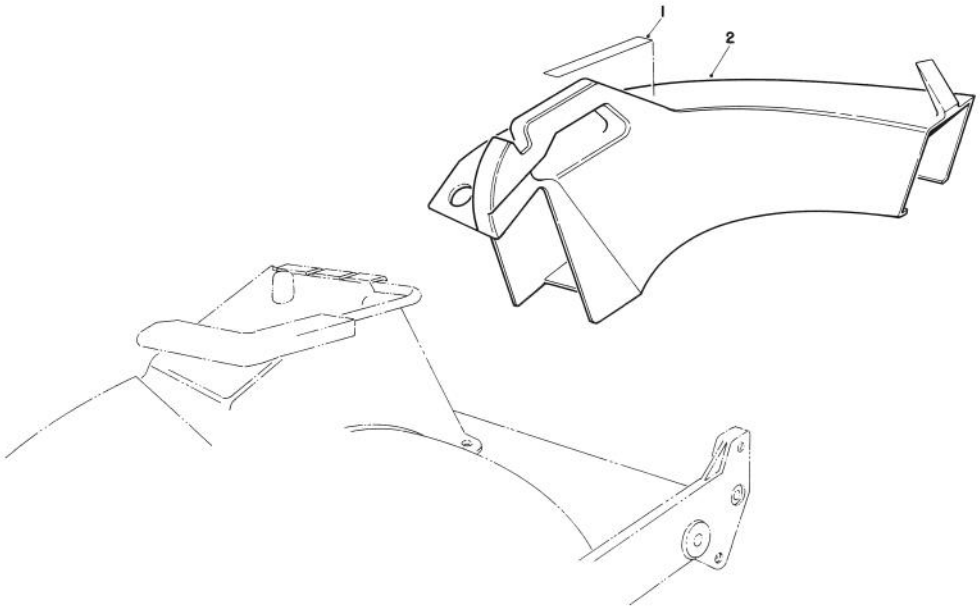

C-0716-90

SIDE DISCHARGE CHUTE MODEL NO. 59168 (OPTIONAL)

Ref. No.	Part No.	Description	No. Used
1	76-4780	Decal — Caution	1

Ref. No.	Part No.	Description	No. Used
2	13-2239	Chute — Discharge (Incl. Ref. #1)	1

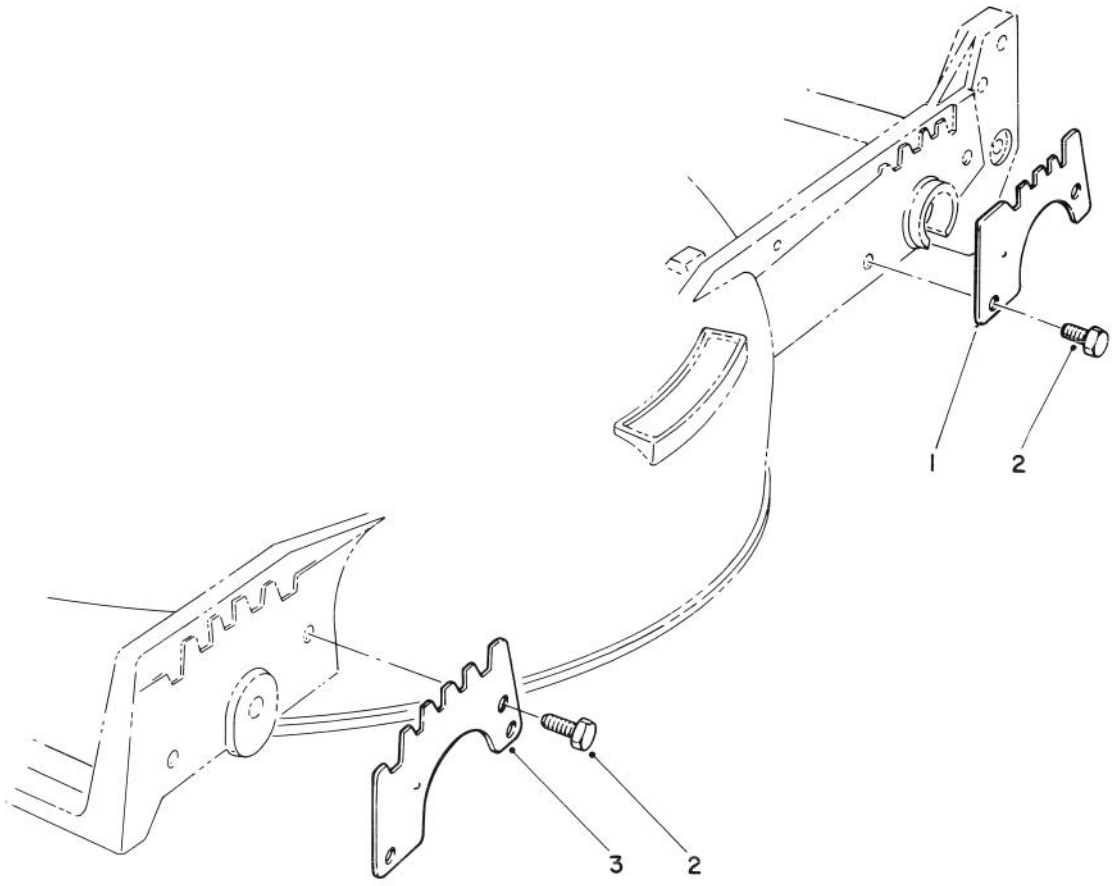

C-0332-90

WEAR PLATE MODEL NO. 49-4080 (OPTIONAL)

Ref. No.	Part No.	Description	No. Used
1	49-4070	Plate - Rear Wear	2
2	32104-17	Thread Forming Screw	8

Ref. No.	Part No.	Description	No. Used
3	43-5050	Plate - Wear Front	2

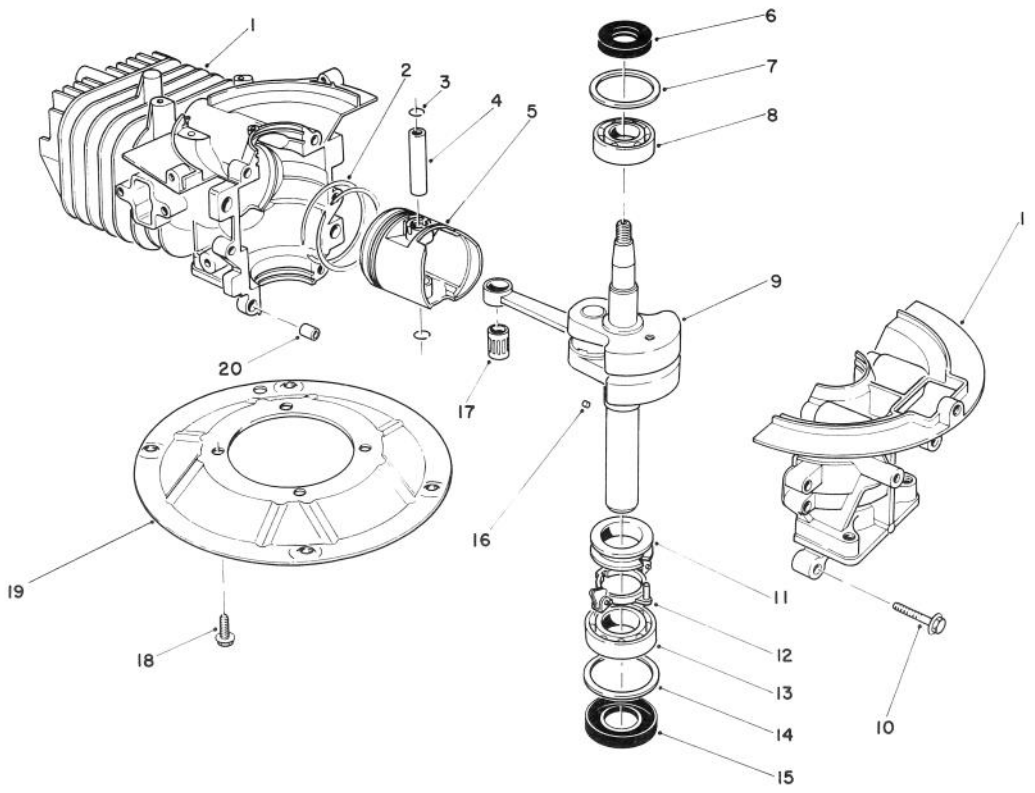

C-0190-90

CRANKSHAFT ASSEMBLY
(Model No. 47PK9-1)

Ref. No.	Part No.	Description	No. Used
1	81-2800	Crankcase/Cylinder Assy.	1
2	81-0590	Ring Set	1
3	81-0620	Circlip	2
4	81-0600	Pin — Wrist	1
5	81-0580	Piston (58 mm)	1
6	81-0720	Oil Seal — Upper	1
7	81-0710	Thrust Washer — Upper	1
8	81-0690	Bearing — Upper (20 mm)	1
9	81-4600	Crankshaft/Connecting Rod Assembly	1
10	81-0540	Bolt (30 mm Lg.)	6

Ref. No.	Part No.	Description	No. Used
11	81-0770	Spacer — Governor	1
12	81-0750	Bracket — Governor Arm	1
13	81-0700	Bearing — Lower (25 mm)	1
14	81-0730	Thrust Washer — Lower	1
15	81-0740	Oil Seal — Lower	1
16	81-0760	Pin — Crankshaft	1
17	81-0610	Bearing — Wrist Pin	1
18	81-0570	Bolt (20 mm Lg.)	4
19	81-0560	Plate — Mounting	1
20	81-0520	Pin — Crankcase	2
*	12-7699	Short Block Assembly	1

* Not Illustrated

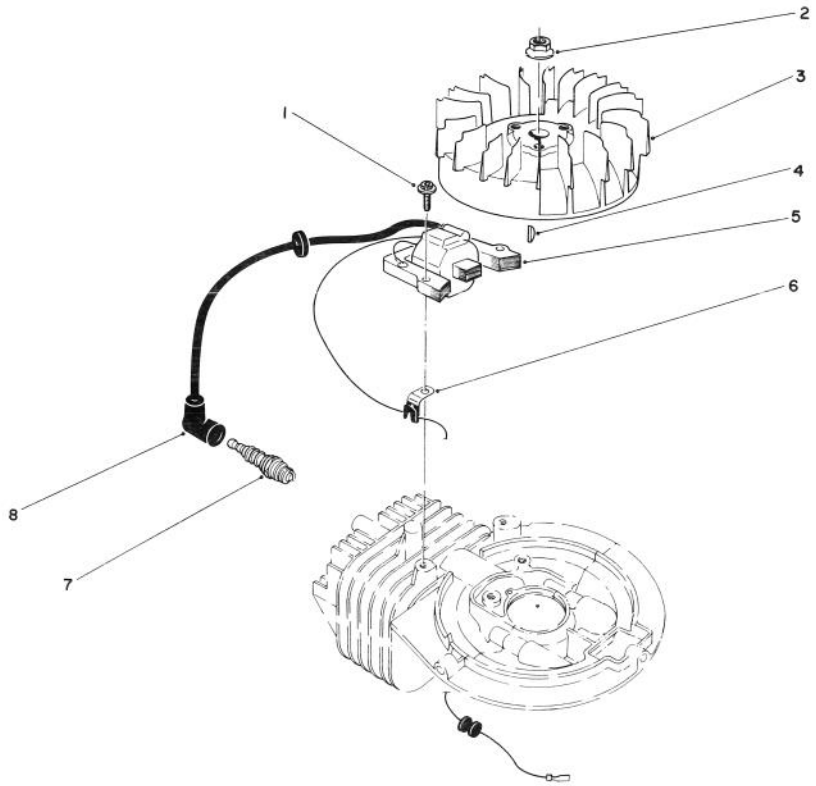

C-0176-90

IGNITION ASSEMBLY
(Model No. 47PK9-1)

Ref. No.	Part No.	Description	No. Used
1	81-5680	Capscrew — Hex Hd.	2
2	81-1330	Nut	1
3	81-2810	Flywheel — Magneto	1
4	81-2370	Key — Flywheel	1
5	81-2820	Coil/Ignition Assembly	1

Ref. No.	Part No.	Description	No. Used
6	81-1480	Clamp	1
7	81-0181	Spark Plug	1
8	81-1500	Cover — Spark Plug	1
*	41-7650	Puller — Flywheel	1

* Not Illustrated

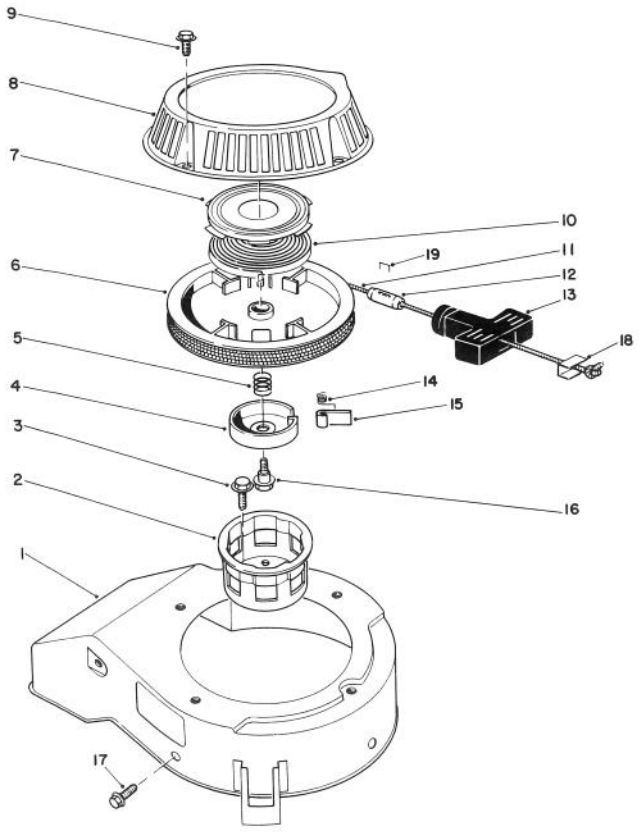

C-0178-90

RECOIL ASSEMBLY
(Model No. 47PK9-1)

Ref. No.	Part No.	Description	No. Used
1	81-2070	Cover — Cooling Fan	1
2	81-1290	Pulley — Starter Cup	1
3	81-1300	Bolt (16 mm Lg.)	3
4	81-1250	Retainer — Dog	1
5	81-1240	Spring — Compression	1
6	81-1210	Reel — Rope Pulley	1
7		Retainer Cup — Recoil Spring	1
8	81-2090	Case — Recoil	1
9	81-1280	Bolt	4
10		Spring — Recoil	1
11	81-1270	Rope	1
12	81-3980	Stop — Recoil	1

Ref. No.	Part No.	Description	No. Used
13	81-1630	Handle — Recoil	1
14	81-1220	Spring — Dog	1
15	81-1230	Dog	1
16	81-1260	Bolt — Shoulder	1
17	81-1170	Bolt — Self Tapping (15 mm Lg.)	3
18	81-5760	Insert — Recoil	1
19†		Staple	1
*	81-2040	Starter Assembly (Incl. Ref. #4-16)	1
*	81-2300	Spring & Retainer (Incl. Ref. #6 & 9)	1

* Not Illustrated
† Obtain Locally

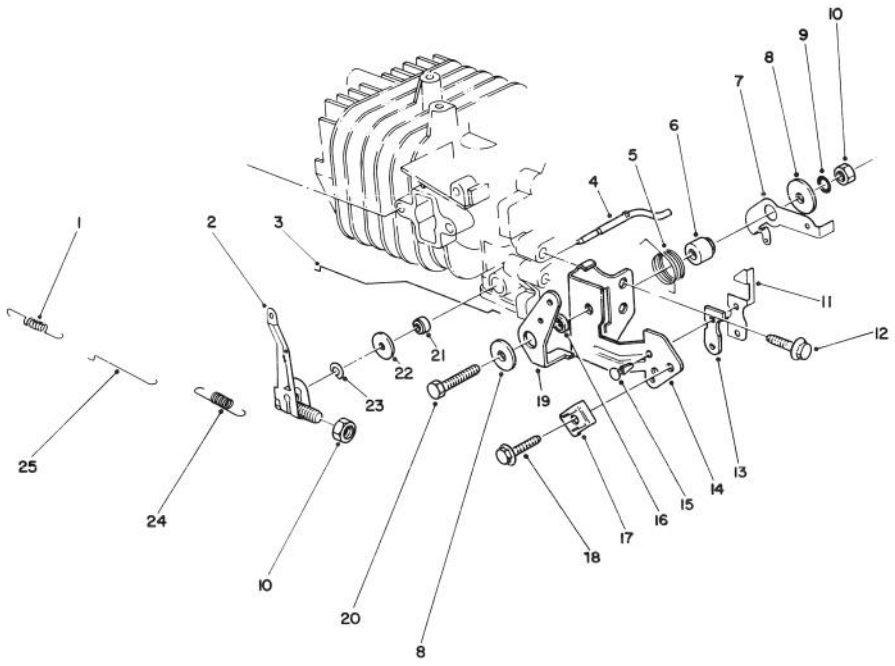

C-0192-90

GOVERNOR ASSEMBLY (Model No. 47PK9-1)

Ref. No.	Part No.	Description	No. Used
1	81-0920	Spring — Carburetor Rod	1
2	81-5420	Governor Arm/Bolt Assembly	1
3	81-5410	Rod — Choke	1
4	81-0840	Shaft — Governor	1
5	81-2460	Spring — Choke Control Lever	1
6	81-1770	Spacer — Governor Spring Lever	1
7	81-2850	Lever — Governor Spring	1
8	81-1750	Washer — Choke Control Lever	2
9	81-1450	Washer — Lock	1
10	81-0900	Nut	2
11	81-1840	Terminal — Kill Switch	1
12	81-1170	Bolt — Self Tapping (15 mm Lg.)	1

Ref. No.	Part No.	Description	No. Used
13	81-1830	Insulator — Kill Switch	1
14	81-2420	Bracket — Throttle Control	1
15	81-1850	Rivet — Kill Switch	2
16	81-2470	Spacer — Choke Control Lever	1
17	81-2430	Clamp — Cable	1
18	50-0130	Bolt — Cable Clamp	1
19	81-1710	Lever — Choke Control	1
20	81-1730	Bolt — Throttle Control Bracket	1
21	81-0850	Oil Seal — Governor Shaft	1
22	81-0860	Washer	1
23	81-0870	E-Ring	1
24	81-2830	Spring — Governor	1
25	81-0910	Rod — Carburetor	1

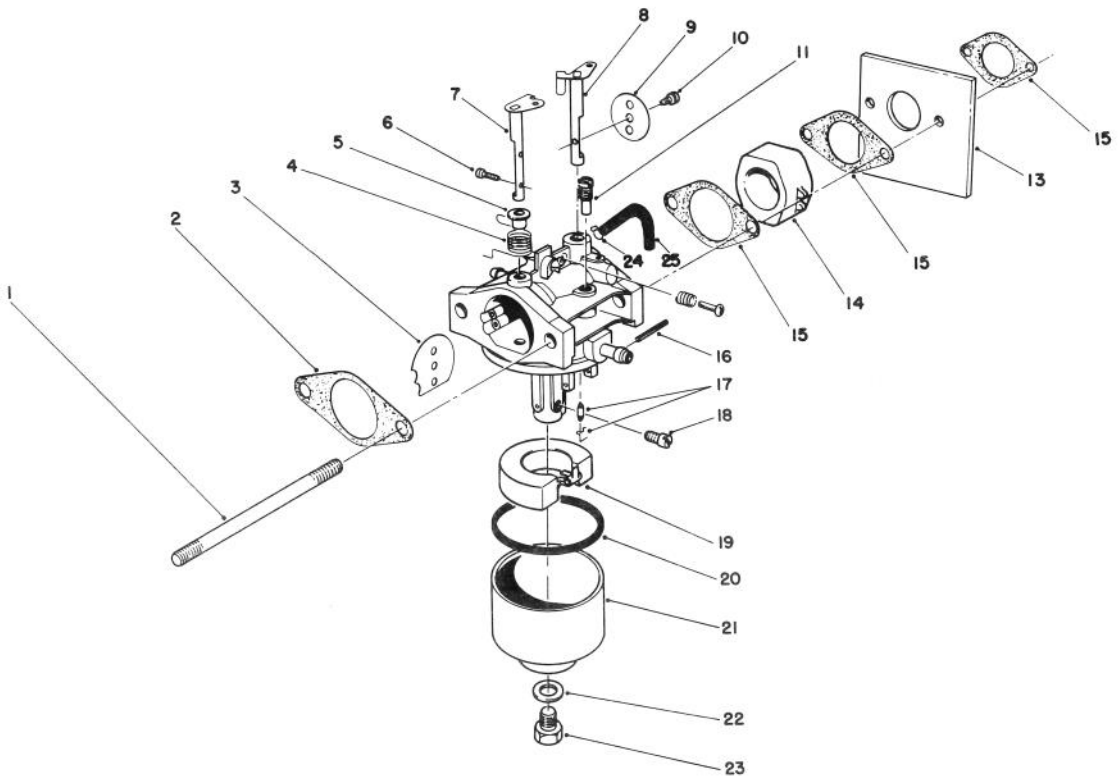

C-0191-90

CARBURETOR ASSEMBLY (Model No. 47PK9-1)

Ref. No.	Part No.	Description	No. Used
1	81-5450	Stud Bolt — Carburetor	2
2	81-0090	Gasket	1
3	81-0240	Valve — Choke	1
4	81-0230	Spring — Choke	1
5	81-0220	Bushing — Choke Valve	1
6	81-2160	Screw	2
7	81-1950	Shaft — Choke	1
8	81-0250	Shaft — Throttle	1
9	81-0260	Valve — Throttle	1
10	81-0270	Screw — Throttle Valve	1
11	81-1030	Jet — Pilot #(40)	1
13	81-5490	Shield — Carburetor	1
14	81-5440	Insulator — Carburetor	1
15	81-0780	Gasket	3
16	81-5600	Pin	1

Ref. No.	Part No.	Description	No. Used
17	81-4910	Needle Valve/Spring Wire	1
18	81-1060	Jet — Main #(75)	1
*	81-2340	Jet — Main #(72.5) High Alt., Above 6,000 (Optional)	1
19	81-0970	Float	1
20	81-1010	Gasket — Float Bowl	1
21	81-5660	Bowl — Float	1
22	81-1020	Gasket — Bowl Screw	1
23	81-5670	Screw — Bowl	1
*	12-6379	Carburetor Kit (Incl. Ref. #2, 15, 17, 20 & 22)	1
*	81-5430	Carburetor Assembly — Complete	1
24	81-5460	Clamp — Vent Tube	1
25	81-5470	Tube — Vent	1

* Not Illustrated

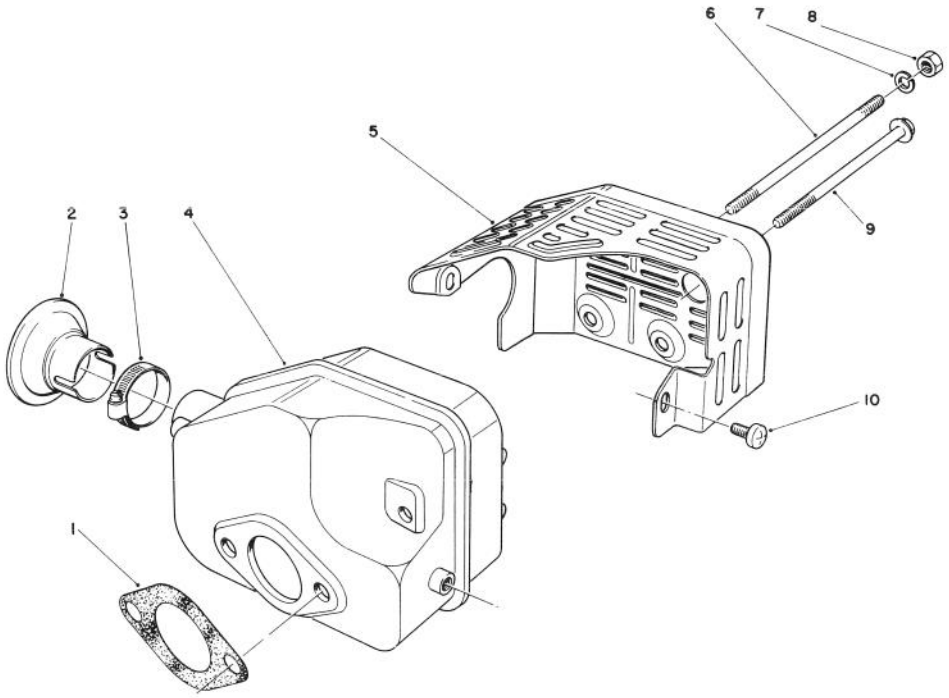

C-0667-90

MUFFLER ASSEMBLY
(Model No. 47PK9-1)

Ref. No.	Part No.	Description	No. Used
1	81-1080	Gasket — Muffler	1
2*	81-0200	Spark Arrester	1
3†		Clamp	1
4	81-5690	Muffler	1
5	81-2450	Cover — Muffler	1

Ref. No.	Part No.	Description	No. Used
6	81-1100	Bolt	2
7	81-1120	Washer — Lock	2
8	81-1110	Nut	2
9	81-1150	Bolt — Self Tapping	1
10	81-1140	Screw — Phillips Hd.	2

* Optional Equipment
† Obtain Locally

PRODUCT CHANGES

In an effort to make improvements available to TORO owners as quickly as possible, minor changes are incorporated into Toro's products from time to time that do not become immediately shown in the Parts Catalog. If such a change apparently has been made in your unit, which is not reflected in your manual, see your TORO Distributor or his Authorized TORO Service Dealer for information and part numbers.

IDENTIFICATION AND ORDERING

MODEL AND SERIAL NUMBERS

The Mower has two identification numbers: a model number and a serial number. The two numbers are stamped on a decal which is located on the mower housing between the rear wheels. In any correspondence concerning the mower, supply model and serial numbers to assure that correct information and replacement parts are obtained.

To order replacement parts from an Authorized TORO Service Dealer, supply the following information:

1. Model and serial numbers of the mower.
2. Part number, description, and quantity of part(s) desired.

Note: Do not order by reference number if a parts catalog is being used; use the PART NUMBER.

The Toro Promise

A Two Year Limited Warranty

On All

Gasoline Powered Consumer Products

The Toro Company promises to repair your TORO Product if defective in materials or workmanship. The following time periods from the date of purchase apply:

Residential Product ..... 2 Years
Residential Products Used Commercially ..... 45 Days

The costs of parts and labor are included, but the customer pays the transportation costs. Just return any residential product to an Authorized TORO Service Dealer or TORO Distributor.

Should you feel your TORO Product is defective and wish to rely on The Toro Promise, the following procedure is recommended:

1. Contact any Authorized TORO Service Dealer, TORO Master Service Dealer, or TORO Distributor (the Yellow Pages of your telephone directory is a good reference source).
2. He will either instruct you to return the product to him or recommend another Authorized TORO Service outlet which might be more convenient.
3. Bring the product along with your original sales slip, or other evidence of purchase date, to the service dealer.
4. The servicing dealer will inspect the unit, advise you whether the product is defective and, if so, make all repairs necessary to correct the defect without extra charge to you.

If for any reason you are dissatisfied with the dealer's analysis of the defect or the service performed, you may contact us.

Write:

TORO Consumer Service Department
8111 Lyndale Avenue South
Minneapolis, Minnesota 55420

The above remedy of product defects through repair by an Authorized TORO Service Dealer is the purchaser's sole remedy for any defect.

THERE IS NO OTHER EXPRESS WARRANTY. ALL IMPLIED WARRANTIES OF MERCHANTABILITY AND FITNESS FOR USE ARE LIMITED TO THE DURATION OF THE EXPRESS WARRANTY.

Some states do not allow limitations on how long an implied warranty lasts, so the above limitation may not apply to you.

This warranty applies only to parts or components which are defective and does not cover repairs necessary due to normal wear, misuse, accidents, or lack of proper maintenance. Regular, routine maintenance of the unit to keep it in proper operating condition is the responsibility of the owner.

All warranty repairs reimbursable under The Toro Promise must be performed by an Authorized TORO Service Dealer using Toro approved replacement parts.

Repairs or attempted repairs by anyone other than an Authorized TORO Service Account are not reimbursable under The Toro Promise. In addition, these unauthorized repair attempts may result in additional malfunctions, the correction of which is not covered by warranty.

THE TORO COMPANY IS NOT LIABLE FOR INDIRECT, INCIDENTAL OR CONSEQUENTIAL DAMAGES IN CONNECTION WITH THE USE OF THE PRODUCT INCLUDING ANY COST OR EXPENSE OF PROVIDING SUBSTITUTE EQUIPMENT OR SERVICE DURING PERIODS OF MALFUNCTION OR NON-USE.

Some states do not allow the exclusion or limitation of incidental or consequential damages, so the above limitation or exclusion may not apply to you.

This warranty gives you specific legal rights, and you may also have other rights which vary from state to state.

COUNTRIES OTHER THAN THE UNITED STATES OR CANADA

Customers who have purchased TORO products exported from the United States or Canada should contact their TORO Distributor (Dealer) to obtain guarantee policies for your country, province or state. If for any reason you are dissatisfied with your Distributor's service or have difficulty obtaining guarantee information, contact the TORO importer. If all other remedies fail, you may contact us at The Toro Company.

Compliance with Radio Interference Regulations Certified.
Certifie Conforme au Reglement sur le Brouillage Radioelectrique.

MAINTENANCE RECORD

Date	Hours Used	Oil Change	Air Cleaner Service	Lubrication	Sharpen Blade	Winter Storage	Spring Service	Spark Plug Gap