Form No. 3354–536 Rev B

TORO®

Pro Sweep 5200

Model No. 07065—Serial No. 260000001 and Up

Operator's Manual

CE

English (EN)

Contents

	Page
Introduction	2
Safety	2
Supervisor's Responsibilities	2
Before Operating	2
While Operating	3
While Dumping	3
Maintenance	4
Sound Power Level	4
Sound Pressure Level	4
Specifications	8
General Specifications	8
Dimensions and Weights (approx.)	9
Optional Equipment	9
Loose Parts	10
.	11
Set Up	11
Special Instructions	11
Install the Hitch Tongue	12
Install the Actuator arm	12
Install the Power Wire Harness	13
Mount the Sweeper To the Tow Vehicle	14
Mount Controller Box to the Workman Vehicle	14
Mount the Controller Box to the Sweeper	14
Route and Secure Hoses and Harness	15
Install the Controller Box Harness	15
Connect the Hydraulic Hoses	18
Connect the Harness'	18
Mount the Windrow Blades	19
Before Operating	20
Adjust the Brush Height	20
Adjusting the Roller Scraper	21
Adjust the Front Flap Height	21
Check the Tire Pressure	21
Check the Torque of the Wheel Nuts	22
Know Your Controls	22
Controller Box	22
Operation	23
Using the Hopper Safety Support	23
Checking Interlock System	24
Operating Tips	24
While Sweeping	24
Dumping the Hopper	24
Inspection And Cleanup After Operation	25
Transporting Sweeper	25
Cold Weather Operation	25
Lubrication	26
Lubricate the Fittings and the Bearings	26
Maintenance	27
Recommended Maintenance Schedule	27
Daily Maintenance Checklist	28
Troubleshooting	29
Storage	30
Hydraulic Schematic	30
Electrical Schematic	31
The Toro General Commercial Products Warranty	32

Introduction

Read this manual carefully to learn how to operate and maintain your product properly. The information in this manual can help you and others avoid injury and product damage. Although Toro designs and produces safe products, you are responsible for operating the product properly and safely.

Whenever you need service, genuine Toro parts, or additional information, contact an Authorized Service Dealer or Toro Customer Service and have the model and serial numbers of your product ready. The two numbers are stamped on a plate which is located on the blower housing.



Figure 1

1. Serial plate location

Write the product model and serial numbers in the space below:

Model No. _____

Serial No. _____

© 2005 by The Toro Company

8111 Lyndale Avenue South
Bloomington, MN 55420-1196

All Rights Reserved

Printed in the USA

This manual identifies potential hazards and has special safety messages that help you and others avoid personal injury and even death. ***Danger***, ***Warning***, and ***Caution*** are signal words used to identify the level of hazard. However, regardless of the hazard, be extremely careful.

Danger signals an extreme hazard that *will* cause serious injury or death if you do not follow the recommended precautions.

Warning signals a hazard that *may* cause serious injury or death if you do not follow the recommended precautions.

Caution signals a hazard that may cause minor or moderate injury if you do not follow the recommended precautions.

This manual uses two other words to highlight information. **Important** calls attention to special mechanical information and **Note:** emphasizes general information worthy of special attention.

Safety

Hazard control and accident prevention are dependent upon the awareness, concern, and proper training of the personnel involved in the operation, transport, maintenance, and storage of the machine. Improper use or maintenance of the machine can result in injury or death. To reduce the potential for injury or death, comply with the following safety instructions.

The following instructions are from ANSI standard B71.4—2004.

Supervisor's Responsibilities

- Ensure operators are thoroughly trained and familiar with the Operator's Manual and all decals on the machine.
- Establish your own special procedures and work rules for unusual operating conditions (e.g., slopes too steep for machine operation, adverse weather conditions, etc.).

Before Operating

- Read, understand and follow the instructions in the Operator's Manual and on the machine before starting. Become familiar with all controls and know how to stop quickly. A free replacement manual is available by sending complete Model and Serial Number to:
  The Toro Company
  8111 Lyndale Avenue South
  Minneapolis, Minnesota 55420–1196
- NEVER allow children to operate the machine. NEVER allow adults to operate the machine without proper instruction. Only trained operators who have read this manual should operate this machine.
- NEVER operate the machine while under the influence of drugs or alcohol.
- Become familiar with the controls and know how to stop the engine quickly.
- Keep all shields, safety devices, and decals in place. If a shield, safety device, or decal becomes damaged, malfunctioning, or illegible, repair or replace it before operation is commenced. Also tighten loose nuts and bolts to ensure machine is in safe operating condition.
- Always wear substantial shoes. Do not operate machine while wearing sandals, tennis shoes, or sneakers or when barefoot. Do not wear loose–fitting clothing that could get caught in moving parts and possibly cause injury. Wearing safety glasses, safety shoes, long pants, and a helmet is advisable and required by some local ordinances and insurance regulations.
- Do not alter this equipment in any manner which may cause hazardous conditions.
- Safety interlock switches are for the operators protection. Disconnected or malfunctioning safety interlock switches could allow the machine to operate in an unsafe manner and may cause personal injury.
  - Do not disconnect the safety interlock switches.
  - Check the operation of the switches daily to be sure the interlock system is operating correctly.
  - If a switch is malfunctioning, replace it before operating the machine.

While Operating

- Rotating parts can cause serious personal injury. Keep hands and feet away from sweeper reel while machine is running. Keep hands, feet, hair, and clothing away from all moving parts to prevent injury. NEVER operate the machine with covers, shrouds, or guards removed.
- **DON'T TAKE AN INJURY RISK!** When a person or pet appears unexpectedly in or near the sweeping area, **STOP SWEEPING.** Careless operation, combined with terrain angles, ricochets, or missing or damaged guards, can lead to thrown object injuries. Do not resume sweeping until area is cleared.
- NEVER carry passengers.
- ALWAYS look to the rear of machine before backing up and assure no one is behind the machine.
- Tip over can cause serious injury or death.
  - NEVER operate on steep slopes.
  - Sweep slopes up and down, never across the face.
  - When going uphill or downhill, do not stop or start suddenly.

  - Stay alert for holes in the terrain or other hidden hazards. To avoid tipping or loss of control, do not drive close to a ditch, creek, or drop off.
  - Never transport the sweeper when it is in the offset position.
  - If engine stalls or machine loses headway and cannot make it to the top of a slope, do not turn machine around. Always back slowly straight down the slope.
- Using the machine demands attention. Failure to operate machine safety may result in an accident, tip over of the machine, and possible serious injury or death. Drive carefully. To prevent tipping or loss of control:
  - Operate only in daylight or when there is good artificial light.
  - Drive slowly.
  - Watch for holes or other hazards.
  - Use care when backing machine.
  - Do not drive close to a sand trap, ditch, tall curb, creek, or other hazard.
  - Reduce speed when making sharp turns and when turning on a hillside.
  - Avoid sudden stops and starts.
  - Do not go from reverse to forward or forward to reverse without first coming to a complete stop.
  - Do not attempt sharp turns or abrupt maneuvers or other unsafe driving actions that may cause loss of control.
  - Watch out for traffic when near or crossing roads. Always yield the right–of–way.
- Operator must be skilled and trained in how to drive on hillsides. Failure to use caution on slopes or hills may cause loss of control, possibly resulting in personal injury or death.
- When using a Workman as a tow vehicle, it is recommended to put 500 pounds of weight into the vehicle bed when operating on any slopes.

While Dumping

- The sweeper must be in the transport position (directly behind tow vehicle) before activating dump cycle.
- Dumping debris can cause serious injury. Stay clear of hopper while machine is backing up or dumping.
- Under rare circumstances wet, compressed grass clippings may generate heat. Always empty the hopper before storing the unit.
- Raising and lowering of hopper door could cause injury to bystanders or pets. Keep bystanders and pets a safe distance from hopper when operating to dump debris or when opening and closing hopper door.
- To avoid the risk of electrical shock, dump hopper only in area clear of overhead wires and other obstructions.
- NEVER dump hopper on a slope. Always dump hopper on level ground.
- Park machine on a level surface, empty hopper, lower hooper until roller is on the ground and block wheels before removing sweeper from tow vehicle.

Maintenance

- Hydraulic fluid escaping under pressure can penetrate skin and do serious damage. Keep body and hands away from pin hole leaks or nozzles that eject high pressure hydraulic fluid. Use cardboard or paper to find hydraulic leaks. Fluid accidentally injected into the skin must be surgically removed within a few hours by a doctor familiar with this form of injury or gangrene may result.
- Perform only those maintenance instructions described in this manual. If major repairs are ever needed or assistance desired, contact an Authorized TORO Distributor.
- Make sure all hydraulic line connectors are tight, and all hydraulic hoses and lines are in good condition before applying pressure to the system.
- Performing maintenance on machine not properly supported with jack stands may cause machine to fall and could cause injury.
- To be sure of optimum performance and safety, always purchase genuine TORO replacement parts and accessories. Replacement parts and accessories made by other manufacturers could be dangerous. Altering this machine in any manner may affect the machine's operation, performance, or durability, or its use may result in injury or death. Such use could void product warranty of The Toro Company.

Sound Power Level

This unit has a guaranteed sound power level of 105 dBA, based on measurements of identical machines per Directive 2000/14/EC and amendments.

Sound Pressure Level

This unit has an equivalent continuous A-weighted sound pressure level at the operator ear of 88 dBA based on measurements of identical machines per Directive 98/37/EC and amendments

Safety and Instruction Decals

Safety decals and instructions are easily visible to the operator and are located near any area of potential danger. Replace any decal that is damaged or lost.

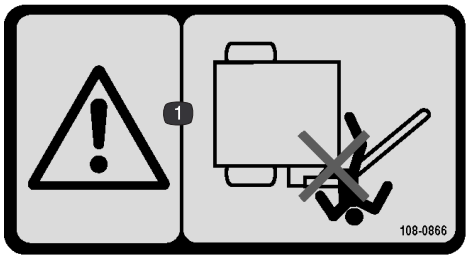

108-0866

1. Crushing hazard—keep bystanders a safe distance from the sweeper arm.



93-9899

1. Crushing hazard—install the cylinder lock.



58-6520

1. Grease

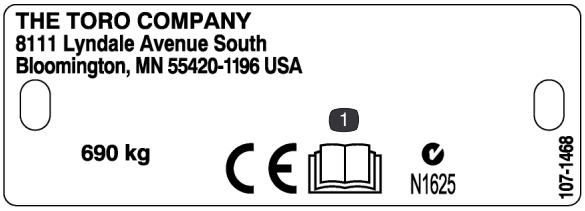

107-1468

1. Read the *Operator's Manual*.

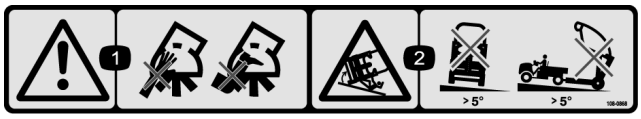

108-0868

1. Warning—keep hands and feet out of the sweeper brush.
2. Tipping hazard—do not operate with the sweeper in the raised position on slopes greater than 5 degrees. The sweeper must be in the transport position before dumping.

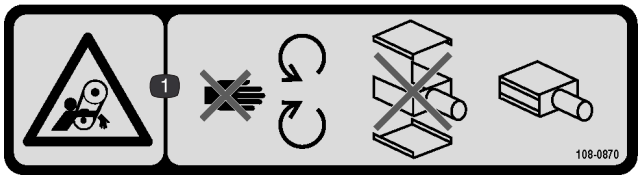

108-0870

1. Entanglement hazard, belts—stay away from moving parts, do not operate with covers removed.

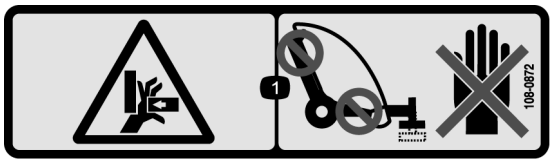

108-0872

1. Crushing hazard of hand—keep hands away from pinch points.

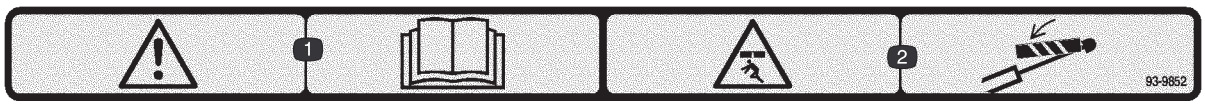

93-9852

1. Warning—read the *Operator's Manual.*
2. Crushing hazard—install the cylinder lock.

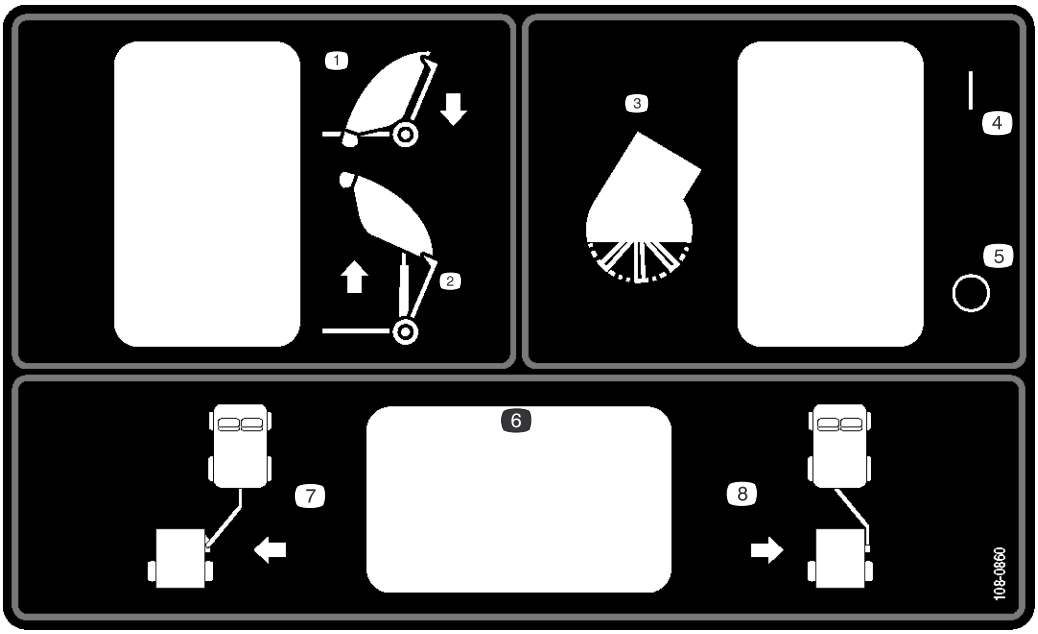

108-0860

1. Lower the Sweeper
2. Raise the sweeper
3. Sweeper brush
4. Engage
5. Disengage
6. Optional switch
7. Move sweeper to operation position
8. Move sweeper to transport position



108-0862

1. Warning—read the *Operator's Manual*, all operators must be trained before operating the machine, keep bystanders a safe distance from the machine.
2. Entanglement hazard, belts—stay away from moving parts, do not operate with covers removed.

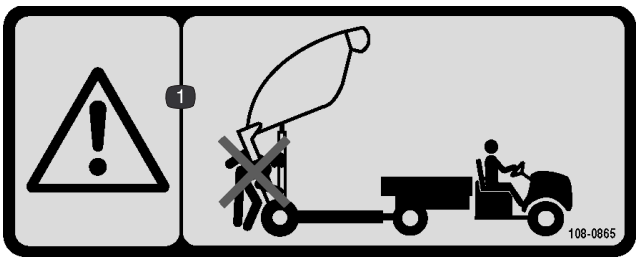

108-0865

1. Warning—keep bystanders a safe distance from the machine when dumping sweeper.

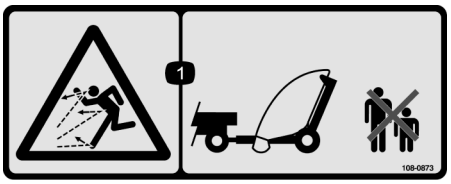

108-0873

1. Thrown object hazard—keep bystanders a safe distance away.



108-0861

1. Warning—read the *Operator's Manual*, all operators must be trained before operating the machine.
2. Crushing/dismemberment hazard of bystanders—do not carry passengers.
3. Electrical shock hazard, overhead power lines—watch for over head power lines.
4. Loss of control hazard—the maximum load at the sweeper is 3500 lbs (1590 kg), at the hitch is 250 (114 kg) lbs, do not drive down slopes.
5. Warning—keep speeds below 15mph (24 kmh).
6. Stored energy hazard, trailer—lower the sweeper, place it on blocks or jack stands, disconnect the sweeper, disconnect the hydraulics and wiring harness; do not drive the sweeper in the raised position.



108-0863

1. Crushing hazard, Falling object hazard—keep bystanders and vehicles a safe distance from the machine when the sweeper is raised.

Specifications

General Specifications

Features	Symmetrical plastic hopper positioned between the outboard wheels. Large floatation tires, optimally placed to share GVW ”equally” when collecting cores. Positive tongue weight via sub frame pivot. Manual engage tongue offset and lock, Floating sweeper head (pitch and roll axis), Sweeping width 52 inches, Sweeper head close–proximity rubber flaps (Anti–dribble rubber side flaps & reduced–deposit rubber front flap). High–dump (Designed to easily dump into a Toro Workman bed or equivalent vehicle) On board hydraulics with electric remote control.
Configuration	Towed, two–wheel trailer with movable tongue to provide an offset position for sweeping. Symmetrical wheel placement (both wheels outboard of hopper). Rear, high–dump hopper. Front–mounted over–throw sweeper brush, with floating sweeping head
Hopper	One piece, rotational–molded construction. Hinged cover opens freely when dumping debris. Rear vent molded into cover.
Sweeper Head	Over–throw design. 52” sweeper width. 14” diameter–Tube Brush, 4–row, 90 degrees radial pattern. Welded steel housing construction. Floating Sweeper Head. Rear roller (6” diameter) is adjustable with a graduated markings to accommodate for brush wear. Rear roller scraper (self cleaning). Direct hydraulic motor drive (650 rpm @ Workman high idle)
Hydraulics	Primary hydraulic power source supplied via Workman high–flow hydraulics kit, 8 gpm @ 2000psi max (3600 rpm high idle), Dual quick couplers (2–hose connection), Dash–mounted ON / OFF switch Note: Older Workman will need a Dakota high–flow hydraulic kit. Single acting hydraulic lift cylinder (3.5” dia x 24.0 stroke), Sweeping brush motor hydraulic (2.7 CID). Hydraulic valve/manifold mounted on Sweeper, with the controls operated from the driver seat by a 12V electrical remote control panel, Lift (momentary)/hold (neutral) float (detent) 3–position switch, Brush enable switch (brush only operates in ”Float”), Provide switched dash–area 12V power tap on Workman. (e.g. for tractor applications) If a tractor is to be used, make sure the hydraulic flow is 800 gpm @ 2000 psi. If the flow is greater than 8 gpm damage to the sweeper may occur.
Dumping	Hopper mouth opening 45.5” (to allow dumping into rear of vehicle bed). Single–pivot dump linkage w/subframe.
Frame/Tongue	Welded tubular steel construction. Pivoting tongue w/ (removable) mechanical latch. Tongue offsets such that brush edge is in line with outboard rear tire of Workman. 3/4” hitch pin with safety lynch pin
Tires	26.5” x 14 – 12” , 2170 lb. load capacity @ 12.5 psi. Ground pressure with full load (1 cubic yard of cores) (Sweeper and cores 3000 lbs) 9psi – 11psi contact pressure.
Safety Devices	Interlock brush switch prevents the brush from operating when the sweeper head is off the ground. Safety lock for lift cylinder.
Speed	Forward sweeping speed between 0–4 mph, infinitely variable (recommended speed 3 mph, Workman vehicle 1st gear high idle) Forward transport speed with hopper in down transport position shall be between 0–15 mph.

Dimensions and Weights (approx.)

Width	87”
Height	79–1/2”
Dump Height Clearance	68”
Length	Hopper Lowered – 68” Hopper Raised – 90–98”
Empty Weight	1500 lb.
Gross Vehicle Weight (GVW)	3500 lb.

Note: Specifications and design subject to change without notice.

Optional Equipment

Tongue Offset Kit	Model No. 07088
Brake Kit	Model No. 07086
Trailer Jack	Part No. 106–9699
Control Box Adapter Mount (2003 or older Workman)	Part No. 107–2811–03
Rear View Mirror (2003 or older Workman)	Part No. 92–2670
Rear View Mirror (2004 or newer Workman)	Part No. 107–8048
Slow Moving Vehicle Kit (SMV)	Part No. 107–1372
Hitch Pin	Part No. 13–6200
Wheel Scraper	Part No. 107–1370

Loose Parts

Note: Use this chart as a checklist to ensure that all parts have been received. Without these parts, total setup cannot be completed.

Description	Qty.	Use
Hitch Tongue Hitch Pin Capscrew, 3/8–16 x 1–1/4 in. Nut, 3/8–16	1 1 1 1	Mount to the sweeper.
Actuator Tab Actuator Arm Capscrew, 1/2–13 x 2–3/4 in. Flat Washer, .531 x .063 Nut, 1/2–13 Idler Pin	1 1 3 6 3 1	Mount to the sweeper and the hitch tongue.
Hitch Pin Hair Pin Cotter	1 1	Secure the sweeper hitch tongue to the tow vehicle hitch.
Power Wire Harness	1	Connect to the tow vehicle battery.
Control Box w/Wire Harness Control Box Mount Screw, 1/4–20 x 3/8”	1 1 4	Mount control box to control box mount
J–Clip Screw, 3/8–16 x 3/4 in. Screw, 8 mm x 2 Washer, 3/16	6 3 1 2	Secure wire harness’ to vehicle
Receiver Assembly (Workman) Knob Clevis Pin Hair Pin Cotter Screw, 5/16–18 x 1 in. Nut, 5/16	1 1 1 1 4 4	Mount receiver assembly to vehicle
Receiver Assembly (Sweeper) Knob Clevis Pin Hair Pin Cotter Screw, 3/8–16 x 1/2 in. Washer Nut, 3/8–16	1 1 1 1 2 4 2	Mount receiver assembly to sweeper
Cable Tie	8	Secure hydraulic hoses and wire harness

Description	Qty.	Use
Windrow Blade Mounting Assembly Capscrew, 7/16 x 3–1/4 in. Flatwasher Spacer Locknut Windrow Blade Flatwasher Spacer Locknut Chain Capscrew, 3/8 x 1–1/4 in. Locknut Snap Link	1 1 3 1 1 1 2 1 1 1 1 1 1	Mount windrow blade assembly
CE Certificate Operators Manual Parts Catalog	1 1 1	Read before operating the sweeper

Set Up

Special Instructions for Workman and other utility tow vehicles (tractors):

- The Toro Pro Sweep can be towed by most utility tractors equipped with hydraulics producing 7 to 8 GPM @ 2000 p.s.i. and flotation tires for operation over golf greens. The tractor must have adequate brakes and drawbar hitch capacity to handle a 3500 lb. (1587 kg.) trailer. Refer to Tow Vehicle Operator's Manual for towing instruction and precautions.
- The Workman vehicle must be equipped with the Heavy Duty Drawbar (Model 44212 or 44213) and the High–Flow Hydraulics Kit (Model 07228) (The 4WD model is the best for hilly or bermed approaches to greens).

Important Do Not attempt pulling the sweeper when loaded with material, with the standard Workman hitch. It is only rated to 1500 lbs. and may bend or damage the cross tube axle support or rear spring shackles. Always use the H.D. Drawbar Kit Model 44212 or H.D. Frame Drawbar Model 44213.

Important Do Not attempt towing a loaded sweeper with a light utility vehicle or run–about. They do not normally have adequate brakes, suspension, or frame strength to handle the weight of the sweeper.

- Trailer Brakes are highly recommended when using the sweeper in hilly terrain. When fully loaded the sweeper may weigh as much as 3500 lbs.(GVW). This weight is well over the recommended towing and braking limit of most utility vehicles. A special trailer brake kit is available for direct installation with the Workman vehicle. This kit could be adapted to other vehicles with a 12 volt brake light source.

Install the Hitch Tongue

1. Insert the rear end of hitch tongue between the mounting plates on the sweeper while aligning the mounting holes (Fig. 2).

Note: The hose guides are to be positioned on top of hitch tongue.

2. Secure the hitch tongue to the mounting plates with a hitch pin (Fig. 2).

3. Secure the hitch pin in the mounting plates with a 3/8–16 x 1–1/4" capscrew and a 3/8–16 locknut (Fig. 2).

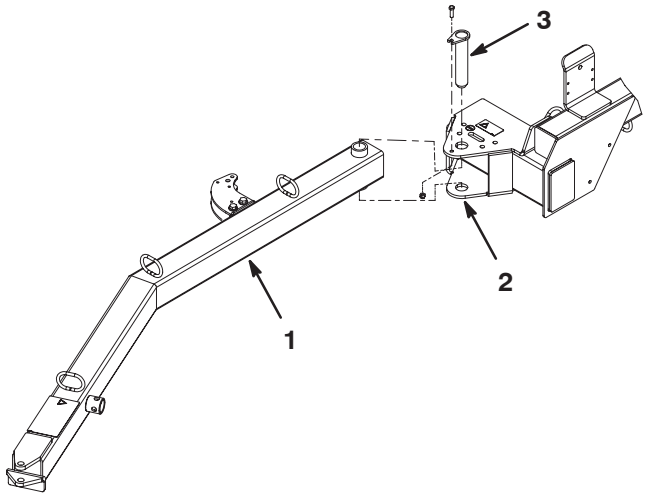

Figure 2

1. Hitch tongue
2. Sweeper mounting plates
3. Hitch pin

Install the Actuator arm

1. Mount the rear actuator tab to the sweeper frame with (2) 1/2–13 x 2–3/4" lg. capscrews, (4) .531 x .063 flat washers and a 1/2–13 locknut. Position components as shown in figure 3.

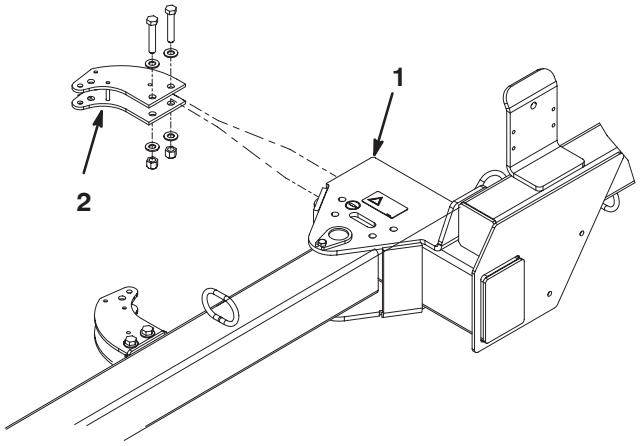

Figure 3

1. Sweeper frame
2. Rear actuator tab

2. Insert the welded tab end of the actuator arm between the welded pins in the front actuator tab (Fig. 4).

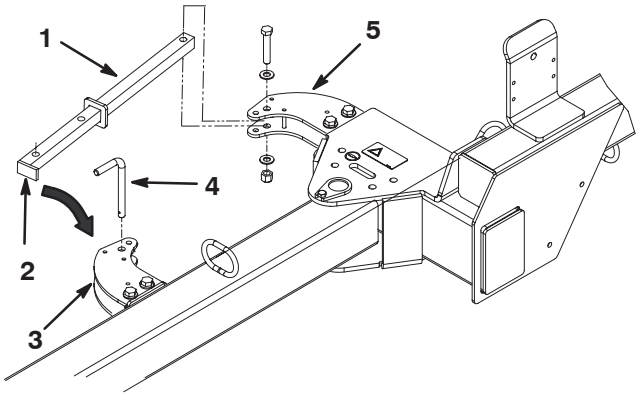

Figure 4

1. Actuator arm
2. Welded tab end of actuator arm
3. Front actuator arm
4. Hitch pin
5. Rear actuator arm

3. Secure the actuator arm to the front actuator tab with a hitch pin (Fig. 4).

4. Insert the rear end of the actuator arm into the rear actuator tab while aligning the mounting holes (Fig. 4).

5. Secure the actuator arm to the actuator tab with a 1/2–13 x 2–3/4" lg. capscrew, (2) .531 x .063 flat washers and a 1/2–13 locknut. Position components as shown in figure 4.

Install the Power Wire Harness

1. Route the ring terminal end of the power wire harness to the tow vehicle battery (Fig. 5 & 7).

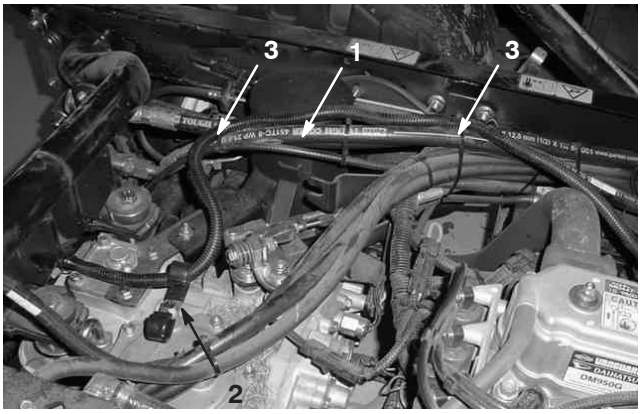

Figure 5

1. Power wire harness
2. J–clamp (2)
3. Wire ties

Note: Keep the harness away from any hot or moving parts.

2. Connect the power wire harness ring terminals to the tow vehicle battery (Fig. 7).

3. Secure the harness to the tow vehicle with wire ties at locations shown in figure 5.

4. Install (2) J–Clips to the top of the transmission with a 8 mm x 2 screw (Fig. 5).

5. Route the harness thru the left J–Clip as shown in figure 5.

6. Route the harness to the rear of the machine as shown in figure 6.

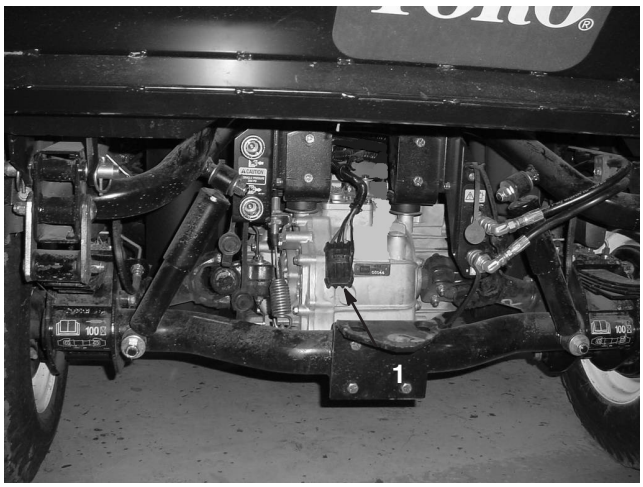

Figure 6

1. Power wire harness

Note: Install the loop back connectors to the terminals when not in use.

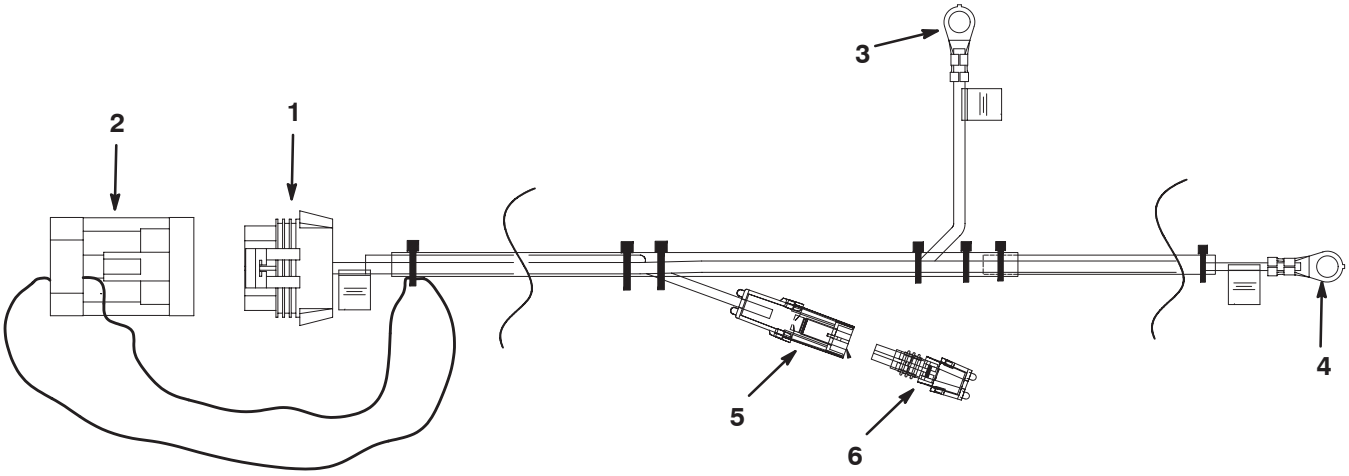

Figure 7

1. Connector to sweeper harness
2. Loopback connector
3. Connect to **negative** battery terminal
4. Connect to **positive** battery terminal
5. Use for optional brake control kit
6. Loop back connector

Mount the Sweeper To the Tow Vehicle

To assure proper debris pickup, make sure sweeper frame is parallel with the ground.

1. Position sweeper on a flat, level surface.
2. Back tow vehicle up to sweeper.
3. Adjust tow vehicle hitch to same level as sweeper hitch. The sweeper hitch tongue is to be parallel to the ground.
4. Connect sweeper hitch tongue to tow vehicle hitch with the hitch pin and hair pin cotter (Fig. 8).

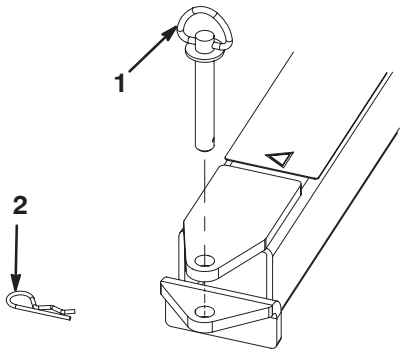

Figure 8

1. Hitch pin
2. Hair pin cotter

Mount the Controller Box to the Workman Vehicle

1. Mount the receiver assembly to the Workman vehicle dash with (4) 5/16–18 x 1 in. capscrews and nuts. Position the components as shown in figure 9.
2. Mount the controller box to the mounting assembly with (4) screws (Fig. 9).
3. Insert the mounting assembly tube into the receiver and secure with a clevis pin and cotter pin (Fig. 9).
4. Thread the knob into the receiver to tighten the tube (Fig. 9).

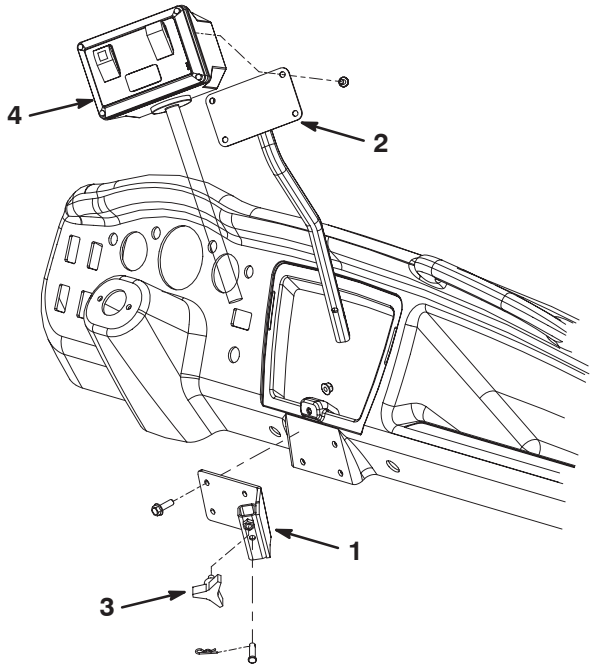

Figure 9

1. Receiver assembly
2. Mounting assembly
3. Knob
4. Controller box

Mount the Controller Box to the Sweeper

1. Mount the receiver assembly to the sweeper frame bracket with (2) 3/8–16 x 1/2 in. capscrews, (4) washers and (2) nuts. Position the components as shown in figure 10.
2. Insert the mounting assembly tube into the receiver and secure with a clevis pin and cotter pin (Fig. 10).
3. Thread the knob into the receiver to tighten the tube (Fig. 10).

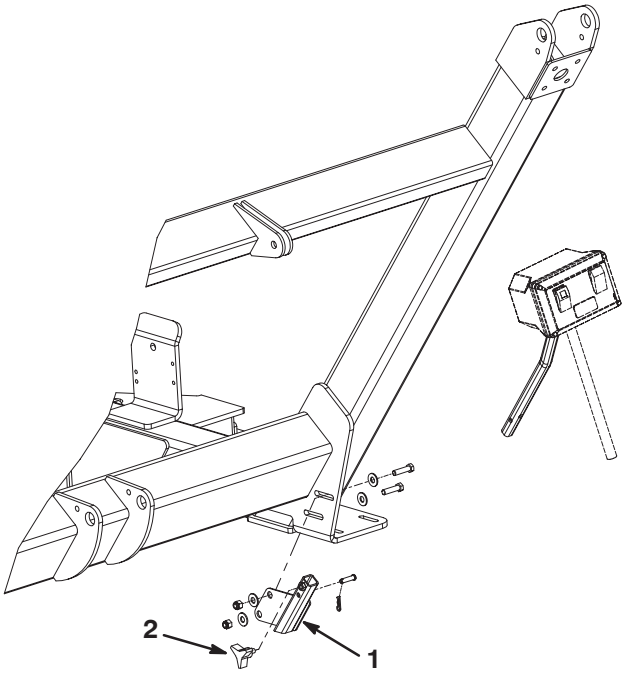

Figure 10

1. Receiver assembly
2. Knob

Route and Secure the Hydraulic Hoses and the Wire Harness

1. Route the hydraulic hoses and wire harness thru the hose guides to the front of the hitch tongue (Fig. 11).



Figure 11

1. Hydraulic hoses and wire harness
2. Hose guide

2. Secure the hydraulic hoses and wire harness as shown in figure 12 & 13.

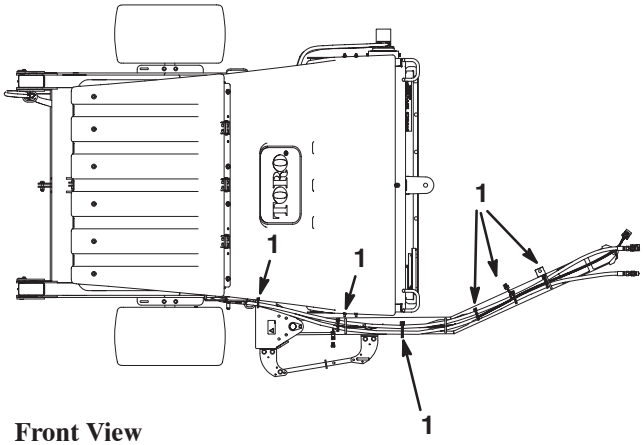

Figure 12

1. Cable tie (6)

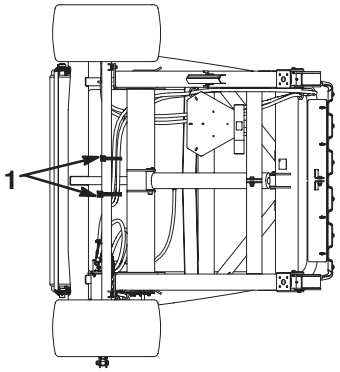

Figure 13

1. Cable tie (2)

Install the Controller Box Harness

1. Remove the front and rear screws securing the right side of the dash plate to the center console on the Workman vehicle (Fig. 14).

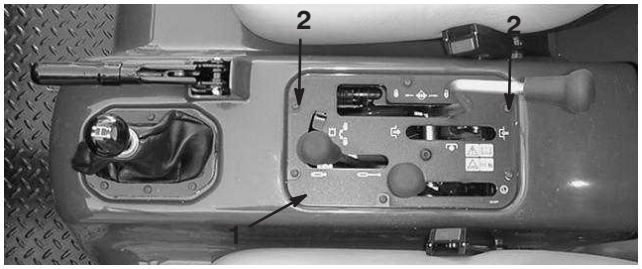

Figure 14

1. Dash panel
2. Mounting screws

2. Using the previously removed dash screws and (2) new washers, mount (2) J–Clips to the dash as shown in figure 15.

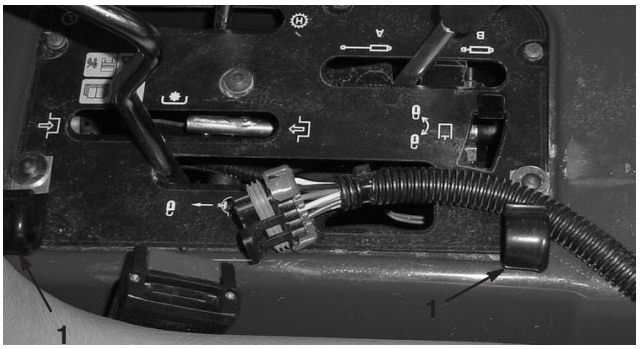

Figure 15

1. J–Clip (2)

3. Route the control box harness thru the J–Clips as shown in figures 16 & 17.



Figure 16



Figure 17

4. Route the control box harness behind the passenger seat (Fig. 18).



Figure 18

5. Route the control box harness between the ROPS and the back panel (Fig. 19).



Figure 19

6. Mount a J–Clip to the vehicle frame cross member with a 3/8–16 x 3/4" lg. capscrew as shown in figure 20. Route the harness thru the J–Clip as shown in figure 20.



Figure 20

1. J–clip

7. Mount a J–Clip to the vehicle frame cross member with a 3/8–16 x 3/4" lg. capscrew as shown in figure 20. Loop the harness and route it thru the J–Clip as shown in figure 20.

8. Mount a J–Clip to the vehicle frame rail with a 3/8–16 x 3/4" lg. capscrew, as shown in figure 21. Route the harness thru the J–Clip as shown in figure 21.

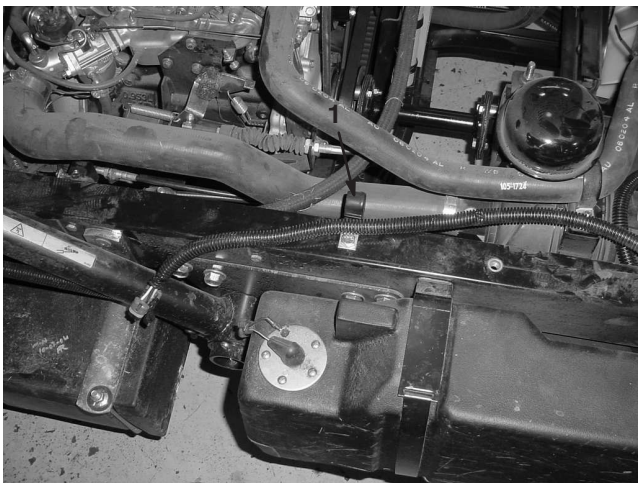

Figure 21

1. J–Clip

9. Route the harness along the frame rail to the top of the transmission (Fig. 22)

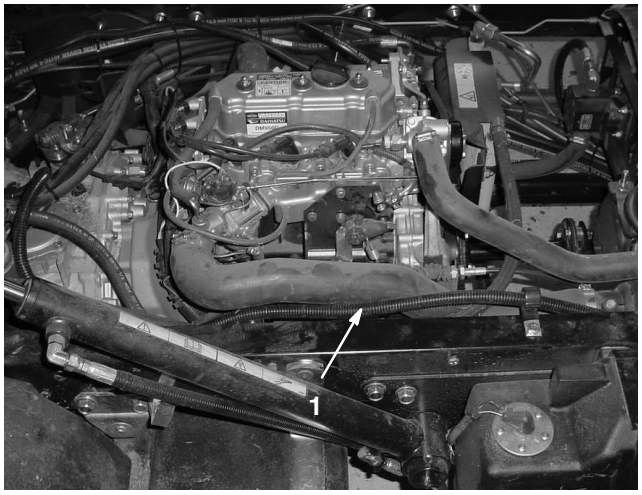

Figure 22

1. Harness

10. Route the harness thru the right J–Clip as shown in figure 23.



Figure 23

1. J–Clip
2. Harness

11. Route the harness to the rear of the machine as shown in figure 24.



Figure 24

1. Control box harness

Connect the Hydraulic Hoses

Connect the hydraulic hoses from the sweeper to the quick couplers on the tow vehicle (Fig. 25).

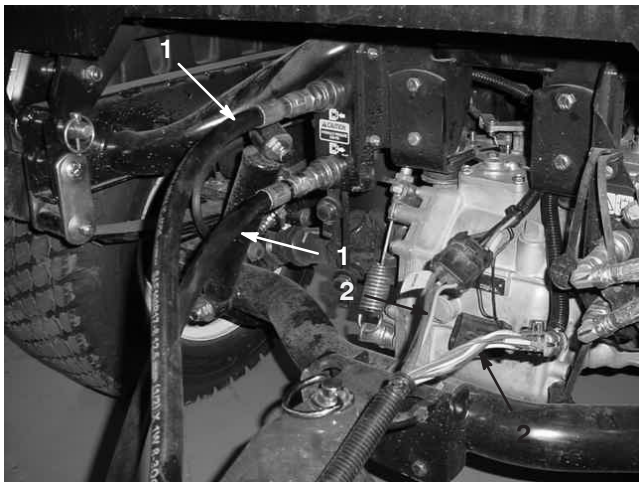

Figure 25

1. Hydraulic hoses
2. Harness'

Important Make sure the brush rotates in the proper direction (when viewed from the motor end, the brush should rotate clockwise. If the brush is rotating counter–clockwise, reverse hydraulic hose connections.

Note: Mark the high pressure hose with a cable tie or something similar to identify the correct hose installation (Fig. 26).

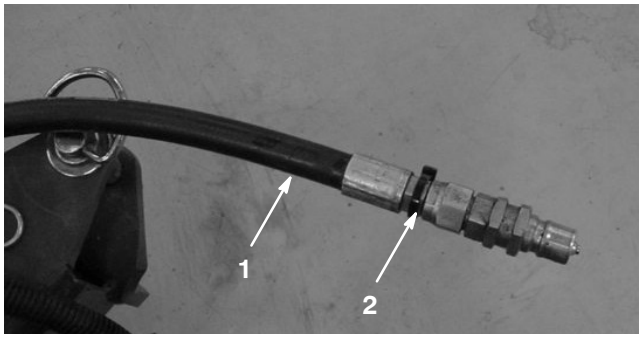

Figure 26

1. High pressure hose
2. Cable tie

Connect the Harness'

Connect the harness from the sweeper to the harness on the tow vehicle (Fig. 25).

Mount the Windrow Blades

1. Secure the blade mounting assembly to the left end of the sweeper frame with a 7/16 x 3–14” lg. capscrew, (3) flatwashers, a spacer and a locknut. Position components as shown in figure 27.
2. Secure the windrow blade to the mounting assembly with a 7/16 x 3–14” lg. capscrew, (2) flatwashers, a spacer and a locknut. Assembly the components as shown in figure 27. The longer end of the blade is to be positioned away from the sweeper.
3. Secure the chain to the blade mounting assembly with a 3/8 x 1–1/4” lg. capscrew and nut (Fig. 27).
4. Secure the other end of the chain to the slot in the frame with the snap link (Fig. 27).There should be some slack in the chain when connected.
5. Grease the fitting on the blade mounting assembly and on the windrow blade hub with No. 2 Lithium Based grease.

Note: When the windrow is not required, unhook the chain from the snap link, pivot the windrow assembly upward and hook the chain at the raised level.

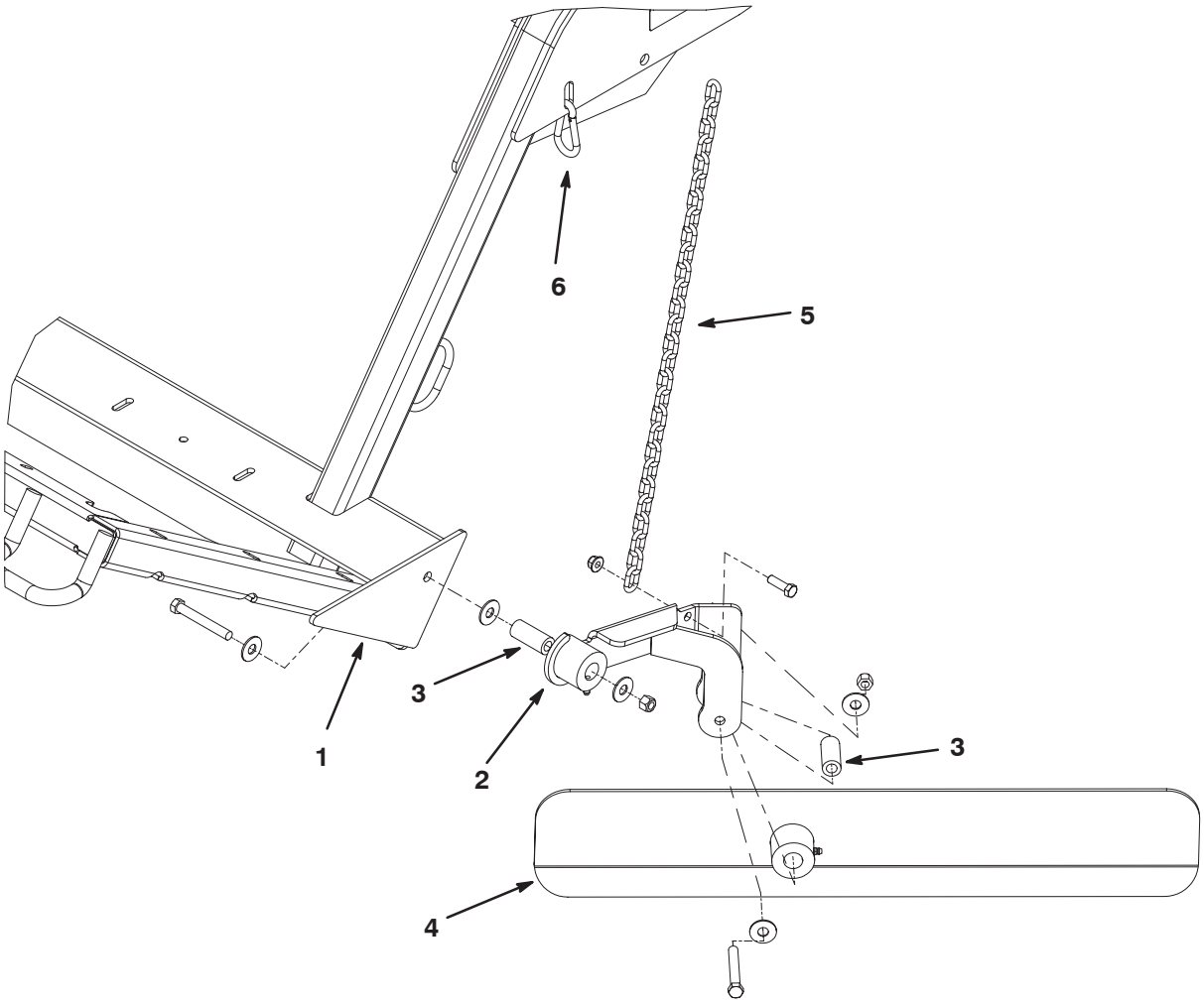

Figure 27

1. Left end of sweeper frame
2. Blade mounting assembly
3. Spacer (2)
4. Windrow blade
5. Chain
6. Snap link

Before Operating

Adjust the Brush Height

The sweeper should be adjusted so the brush tips slightly touch the surface but do not penetrate the turf. If the brush tips do penetrate the turf, improper debris pickup could result.

Refer to the charts below for recommended sweeper settings.

Condition	Roller/Brush Adjustment	Front Flap Adjustment	Notes
Greens/Tee Boxes	2 to 4 notches from bottom	1/4” to 1/2” from ground	Brush should be slightly engaged in the turf
Fairways	3 to 5 notches from bottom	1/2” to 1” from ground	Brush should be engaged into the top 1/3 of the grass height
Sports fields	5 to 7 notches from bottom	1” to 3” from ground	Brush should be engaged into the top 1/3 of the grass height
Leaves	5 to 9 notches from bottom	Remove front panel	Brush should be engaged into the top 1/3 of the grass height

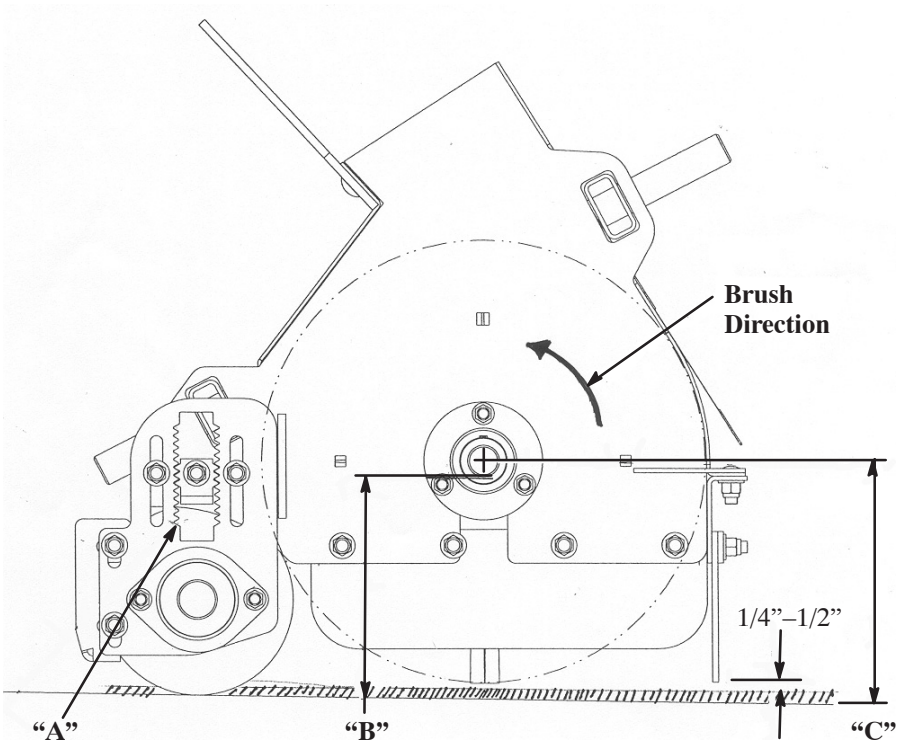

A	B		C
Open Slots	Tab Up	Tab Down	
0	5.500		6.000
		5.625	6.125
1	5.750		6.250
		5.875	6.375
2	6.000		6.500
		6.125	6.625
3	6.250		6.750
		6.375	6.875
4	6.500		7.000
		6.625	7.125
5	6.750		7.250
		6.875	7.375
6	7.000		7.500
		7.125	7.625
7	7.250		7.750
		7.375	7.875
8	7.500		8.000
		7.625	8.125
9	7.750		8.250
		7.875	8.375
10	8.000		8.500
		8.125	8.625
11	8.250		8.750
		8.375	8.875
12	8.500		9.000
		8.625	9.125
13	8.75		9.250
		8.875	9.375

Figure 28

1. Position the sweeper on a level surface.
2. Raise the hopper and install the hopper safety support. Refer to Using the Hopper Safety Support.
3. Loosen the locknut on height adjustment key (Fig. 29) so it can be pulled out approximately 1/2 inch.

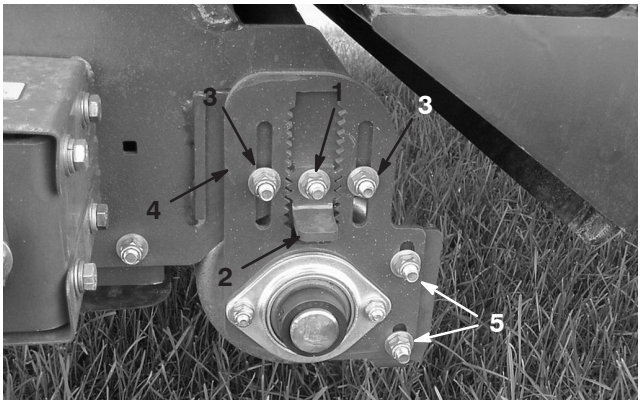

Figure 29

1. Locknut
2. Height adjusting key
3. Roller height adjusting nuts
4. Roller height adjusting plate
5. Roller scraper adjusting nuts

4. Loosen the roller height adjustment locknuts (Fig. 29).

5. Pull out the height adjustor key and move the rear roller up or down by sliding the roller height adjusting plate to the desired height (Fig. 29).

Note: Each notch on the height adjusting plate represents 1/4” rear roller adjustment. A 1/8” adjustment may be attained by rotating the height adjustment key 180°.

6. Tighten the locknuts securing the adjustment.

7. Repeat the procedure the opposite end of the brush. Make sure the adjustments are the same.

Adjusting the Roller Scraper

The roller scraper (Fig. 29) should be adjusted so there is 1/16” clearance between the scraper and the roller. Loosen the roller scraper adjusting nuts, position roller as desired and tighten nuts.

Adjust the Front Flap Height

For best debris pick up results, the front flap (Fig. 30) should be adjusted so there is 1/4” to 1/2” clearance between the bottom of the flap and surface. Raising the front flap all the way or removing the front flap may be required when picking up larger debris or if debris is to be picked up in long grass.



Figure 30

1. Front flap

1. Loosen the nuts securing the metal strap and the front flap to the brush housing (Fig. 31).

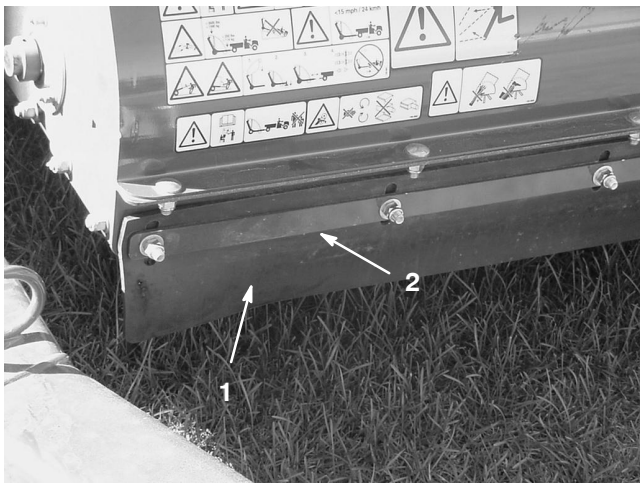

Figure 31

1. Front flap
2. Metal strap

2. Adjust the front flap to the desired operating height and tighten the nuts.

Check the Tire Pressure

Check tire pressure daily to assure proper level.

Correct tire pressure is 12–1/2 psi. (Maximum 18 psi).

Note: The valve stem is located on the back side of the rim.

Check the Torque of the Wheel Nuts

Warning

Failure to maintain proper torque could result in failure or loss of wheel and could result in personal injury. Torque wheel lug nuts to 45–55 ft. lb.



Figure 32

1. Lug nut

Know Your Controls

Controller Box

Lift Switch

Toggle the lift switch (Fig. 33) upward to lower the hopper. Toggle the lift switch downward to raise the hopper.

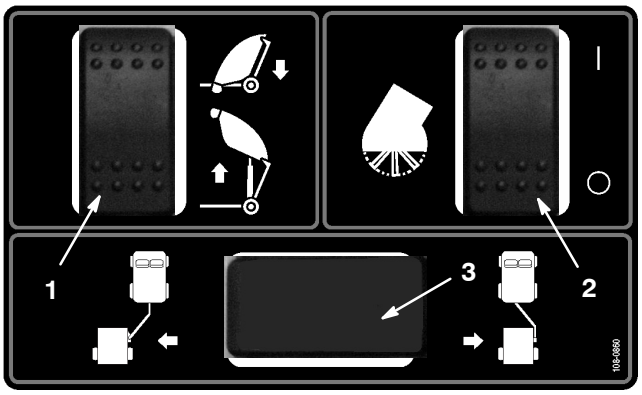

Figure 33

1. Lift switch
2. Brush enable switch
3. Tongue offset switch location (optional)

Brush Enable Switch

Toggle the brush enable switch (Fig. 33) upward to start the rotation of the brush. Toggle the brush enable switch downward to stop the rotation of the brush.

Operation

Warning

ROTATING PARTS CAN CAUSE SERIOUS PERSONAL INJURY

- **Keep hands and feet away from sweeper reel while machine is running.**
- **Keep hands, feet, hair, and clothing away from all moving parts to prevent injury.**
- **NEVER operate the machine with covers, shrouds, or guards removed.**

1. Place the unit on a level surface and apply the parking brake.
2. Remove the hitch pin securing the actuator arm to the front actuator tab (Fig. 34).

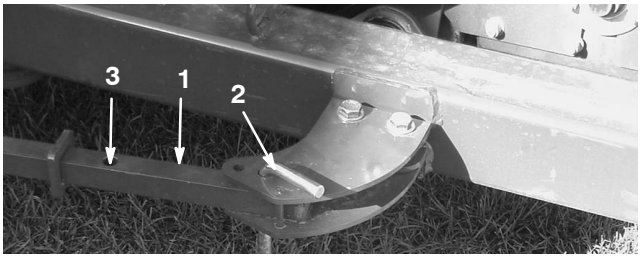

Figure 34

1. Actuator arm
2. Hitch pin
3. Rear hole in arm

3. Push sweeper to the left (Fig. 35) until the hitch pin can be inserted into the rear hole in the actuator arm (Fig. 34).

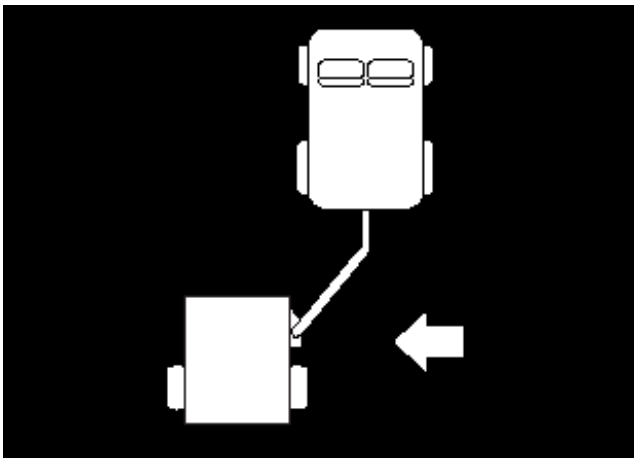

Figure 35

4. Install hitch pin securing the actuator arm to the front actuator tab (Fig. 34).
5. Move sweeper back to transport position upon completion of sweeping.

Using the Hopper Safety Support

Whenever any work has to be done under the raised hopper, the Hopper Safety Support must be installed onto the extended lift cylinder.

1. Raise the hopper until the lift cylinder is extended.
2. Remove the hair pin cotter and pin securing the safety support to the storage bracket on the sweeper frame (Fig. 36). Remove the safety support.



Figure 36

1. Hopper safety support
2. Storage bracket
3. Pin

3. Insert the hopper safety support onto the cylinder rod, making sure the support end rests against the cylinder barrel and the cylinder rod end (Fig. 37). Secure the hopper safety support to the cylinder rod with the hair pin cotter and pin.



Figure 37

1. Safety support

4. To store the safety support, remove the safety support from the cylinder and secure it to the storage bracket on the sweeper frame.

5. Always install or remove the safety support from behind the hopper.

6. Do not try to lower the hopper with the safety support on the cylinder.

Checking Interlock System

The purpose of the safety interlock system is to prevent the brush from rotating when the hopper is raised.

Caution

SAFETY INTERLOCK SWITCHES ARE FOR THE OPERATOR'S PROTECTION. DISCONNECTED OR MALFUNCTIONING SAFETY INTERLOCK SWITCHES COULD ALLOW THE MACHINE TO OPERATE IN AN UNSAFE MANNER AND MAY CAUSE PERSONAL INJURY.

- **Do not disconnect the safety interlock switches.**
- **Check operation of the switches daily to be sure the interlock system is operating correctly.**
- **If a switch is malfunctioning, replace it before operating the machine.**

Operating Tips

- Before starting to sweep, survey area to determine the best direction to sweep.

Note: To maintain a straight line when sweeping, sight an object in the foreground.

- Always try to make a long, continuous run with a slight overlap on the return run.
- On turf areas, the brush will pick up turf cores, twigs, clippings, leaves, pine needles and cones, small debris.
- The sweeper also grooms the turf. The brush combs through and lifts the grass for a uniform cut when mowed. As it cleans, the light scarifying action increase water and pesticide penetration, thus reducing the need for renovation.

Important Do not make sharp turns when using the sweeper as damage to turf may occur.

While Sweeping

Danger

TIP OVER CAN CAUSE SERIOUS INJURY OR DEATH.

- **NEVER operate on steep slopes.**
- **Sweep slopes up and down, never across the face.**
- **When going uphill or downhill, do not stop or start suddenly.**
- **Stay alert for holes in the terrain or other hidden hazards. To avoid tipping or loss of control, do not drive close to a ditch, creek or drop off.**
- **If machine stops going uphill, disengage reels and back slowly downhill. Do not attempt to turn.**

When the hopper is full, the sweeper will no longer pickup as efficiently, leaving or throwing material back on the ground.

Dumping the Hopper

Danger

TIP OVER/ELECTRICAL SHOCK COULD CAUSE SERIOUS INJURY OR DEATH.

- **NEVER dump hopper on a slope. Always dump hopper on level ground.**
- **Dump only in area clear of overhead wires and other obstructions.**

1. Place the machine on a level surface and make sure it is in the transport position before dumping.

2. Engage the lift switch to raise and dump the hopper.

Important Make sure the sweeper is secured to the tow vehicle hitch with the hitch pin and the clevis pin during dumping operation.

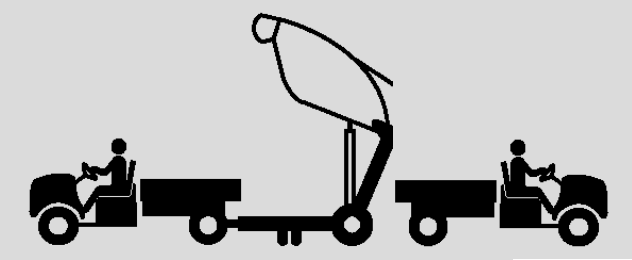

Figure 38

3. Engage the lift switch to lower and close the hopper.

Caution

DUMPING HOPPER CAN CAUSE INJURY TO BYSTANDERS OR PETS.

- **Keep bystanders and pets a safe distance from hopper when dumping hopper.**

Inspection And Cleanup After Operation

- When sweeping has been completed, thoroughly clean and wash the machine. Air dry hopper. After cleaning, it is recommended that the machine be inspected for possible damage to mechanical components. These procedures will assure that the machine will perform satisfactorily during next sweeping operation.

Transporting Sweeper

When transporting the sweeper, use the tie–downs to secure the front of the machine (Fig. 39) and the axle (Fig. 40) to secure the rear of the machine to the trailer. Use of anything other than the proper tie–down locations could cause damage to the machine.



Figure 39

1. Front tie–downs

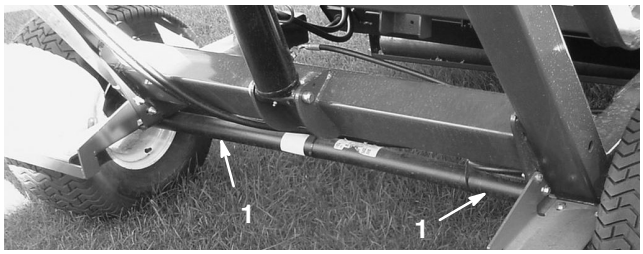

Figure 40

1. Rear tie–down locations

Cold Weather Operation

The Workman high flow hydraulics oil must reach a operating temperature of 180° for proper operation of the floating sweeper head.

Lubrication

Lubricate the Fittings and the Bearings

The sweeper has (11) grease fittings that must be lubricated regularly with No, 2 General Purpose Lithium Base Grease. If the machine is operated under normal conditions, lubricate all bearings and bushings after every 50 hours of operation or immediately after every washing. Bearings and bushings must be lubricated daily when operating conditions are extremely dusty and dirty. Dusty and dirty operating conditions could cause dirt to get into the bearings and bushings, resulting in accelerated wear.

1. Lubricate the following grease fittings:

- Hopper pivot (upper) (2) (Fig. 41).
- Brush pivot (2) (Fig. 42).
- Lift cylinder (2) (Fig. 43).
- Hopper pivot (lower) (2) (Fig. 44).
- Hitch tongue pivot (1) (Fig. 45).
- Windrow blade mount (Fig. 46).
- Windrow blade hub (Fig. 46).

2. Wipe grease fittings clean so foreign matter cannot be forced into the bearing or bushing.

3. Pump grease into the bearing or bushing.

4. Wipe up excess grease.

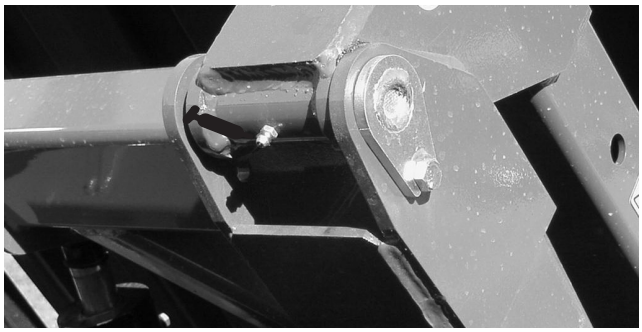

Figure 41



Figure 42



Figure 43



Figure 44

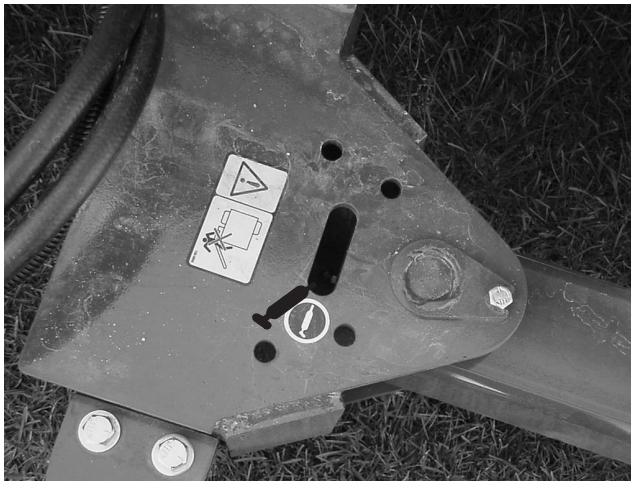

Figure 45



Figure 46

Maintenance

Recommended Maintenance Schedule

Maintenance Service Interval	Maintenance Procedure
After first 10 hours	• Torque wheel lug nuts.
Every 25 hours	• Clean reel drive area.
Every 50 hours	• Lubricate all grease fittings.
Every 100 hours	• Inspect condition of tires. • Replace brush
Every 200 hours	• Torque wheel lug nuts. • Replace front flap
Every 600 hours or annually, whichever occurs first	• Inspect hopper for damage.

Daily Maintenance Checklist

Duplicate this page for routine use.

Maintenance Check Item	For the week of:						
	Mon.	Tues.	Wed.	Thurs.	Fri.	Sat.	Sun.
Check safety interlock operation.							
Check for unusual operating noises.							
Check tire pressure.							
Check hydraulic hoses for damage.							
Check for fluid leaks.							
Check control operation.							
Check hopper.							
Clean wrapped material from brush.							
Check brush wear.[1]							
Lubricate all grease fittings.[2]							
Touch up damaged paint.							

[1].Replace if missing or broken

[2]Immediately after **every** washing, regardless of the interval listed

Notation for Areas of Concern

Inspection performed by:		
Item	**Date**	**Information**
1		
2		
3		
4		
5		
6		
7		
8		
9		

Troubleshooting

Condition	Possible Causes	Corrective Action
Sweeper Not Picking Up	1. Brush damaged. 2. Brush height may be too high. 3. Front flap height might be too low or too high.	1. Replace brush. 2. Adjust brush height. See Brush Height Adjustment. 3. Adjust front flap height. See Front Flap Adjustment.
Excessive Vibration	1. Check bearings on brush shaft. If they are excessively hot, they are probably damaged. 2. Foreign materials wrapped around brush.	1. Replace any damaged bearings. 2. Clean off any foreign objects.

Storage

1. Thoroughly clean the sweeper so it is free of dirt, leaves and debris.
2. Inflate tires to 12–1/2 psi.
3. Check all fasteners. Tighten as necessary.
4. Grease all grease fittings. Wipe off excess lubricant.
5. Check the condition of the brush. Replace as required.

Hydraulic Schematic

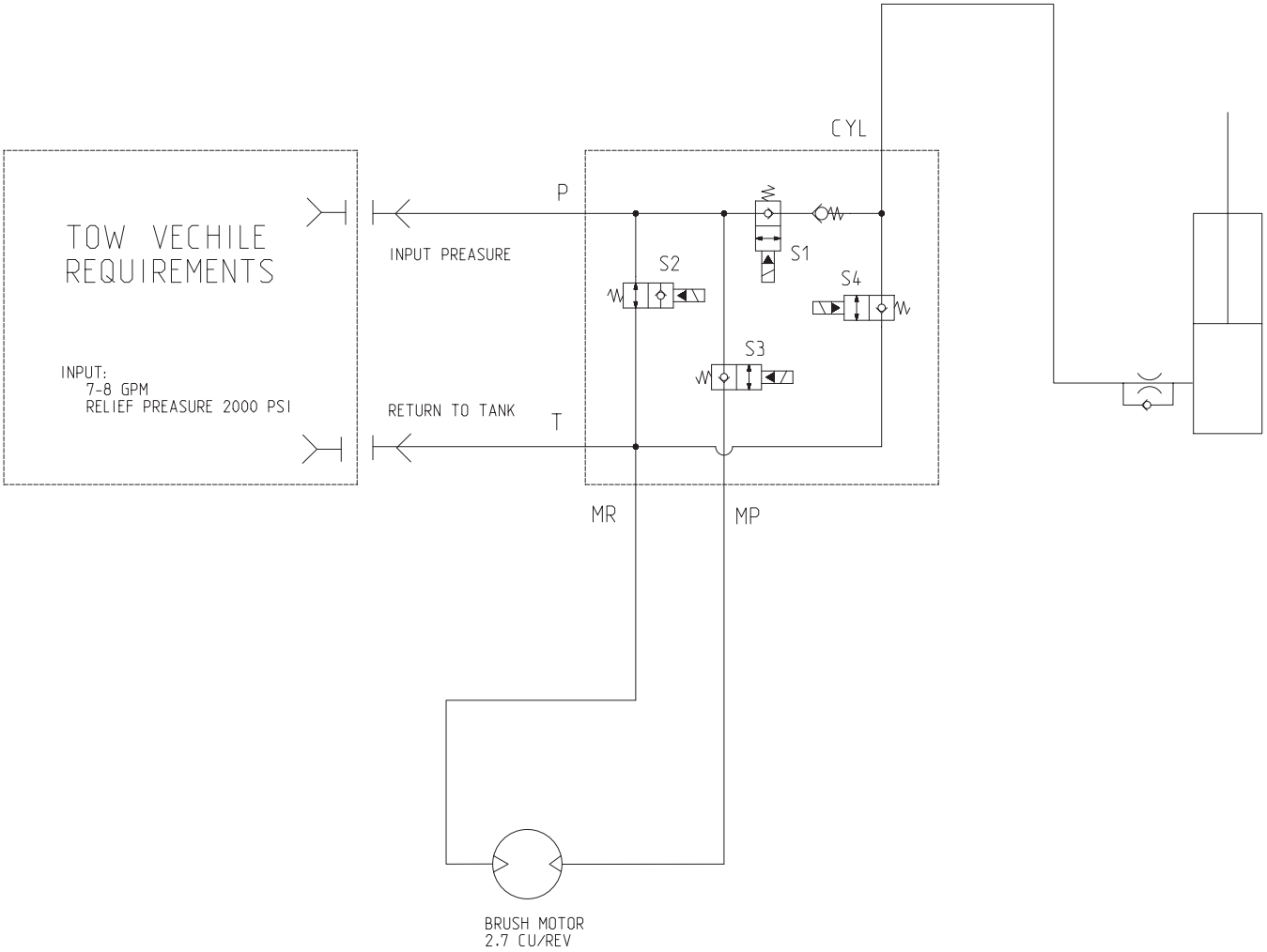

Electrical Schematic

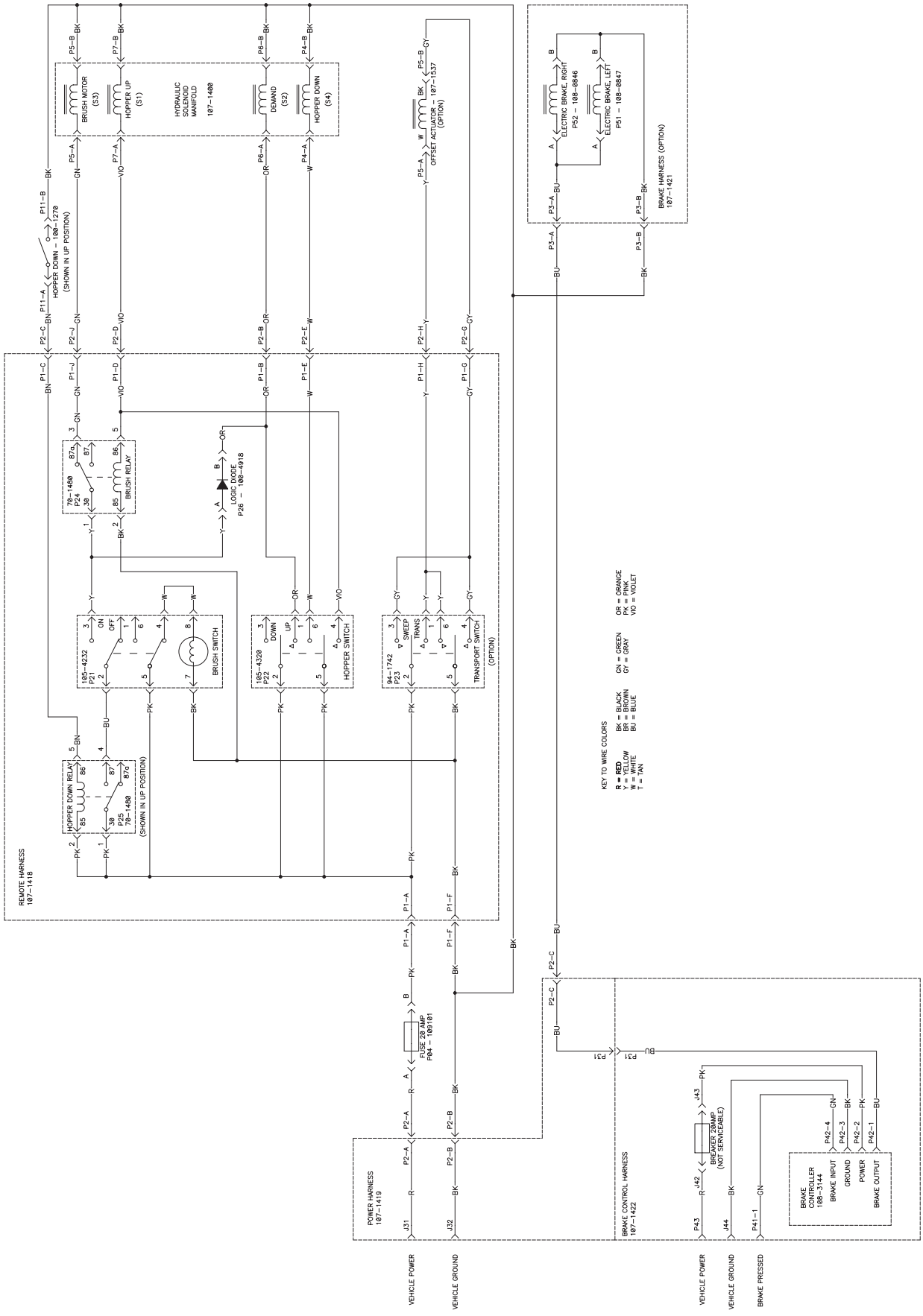

The Toro General Commercial Products Warranty

A Two-Year Limited Warranty

Conditions and Products Covered

The Toro Company and its affiliate, Toro Warranty Company, pursuant to an agreement between them, jointly warrant your Toro Commercial Product ("Product") to be free from defects in materials or workmanship for two years or 1500 operational hours*, whichever occurs first. Where a warrantable condition exists, we will repair the Product at no cost to you including diagnosis, labor, parts, and transportation. This warranty begins on the date the Product is delivered to the original retail purchaser.

* Product equipped with hour meter

Instructions for Obtaining Warranty Service

You are responsible for notifying the Commercial Products Distributor or Authorized Commercial Products Dealer from whom you purchased the Product as soon as you believe a warrantable condition exists.

If you need help locating a Commercial Products Distributor or Authorized Dealer, or if you have questions regarding your warranty rights or responsibilities, you may contact us at:

Toro Commercial Products Service Department
Toro Warranty Company
8111 Lyndale Avenue South
Bloomington, MN 55420-1196
952-888-8801 or 800-982-2740
E-mail: commercial.service@toro.com

Owner Responsibilities

As the Product owner, you are responsible for required maintenance and adjustments stated in your operator's manual. Failure to perform required maintenance and adjustments can be grounds for disallowing a warranty claim.

Items and Conditions Not Covered

Not all product failures or malfunctions that occur during the warranty period are defects in materials or workmanship. This express warranty does not cover the following:

- Product failures which result from the use of non-Toro replacement parts, or from installation and use of add-on, modified, or unapproved accessories
- Product failures which result from failure to perform required maintenance and/or adjustments
- Product failures which result from operating the Product in an abusive, negligent or reckless manner
- Parts subject to consumption through use unless found to be defective. Examples of parts which are consumed, or used up, during normal Product operation include, but are not limited to, blades, reels, bedknives, tines, spark plugs, castor wheels, tires, filters, belts, and certain sprayer components such as diaphragms, nozzles, and check valves, etc.
- Failures caused by outside influence. Items considered to be outside influence include, but are not limited to, weather, storage practices, contamination, use of unapproved coolants, lubricants, additives, or chemicals, etc.
- Normal "wear and tear" items. Normal "wear and tear" includes, but is not limited to, damage to seats due to wear or abrasion, worn painted surfaces, scratched decals or windows, etc.

Parts

Parts scheduled for replacement as required maintenance are warranted for the period of time up to the scheduled replacement time for that part.

Parts replaced under this warranty become the property of Toro. Toro will make the final decision whether to repair any existing part or assembly or replace it. Toro may use factory remanufactured parts rather than new parts for some warranty repairs.

General Conditions

Repair by an Authorized Toro Distributor or Dealer is your sole remedy under this warranty.

Neither The Toro Company nor Toro Warranty Company is liable for indirect, incidental or consequential damages in connection with the use of the Toro Products covered by this warranty, including any cost or expense of providing substitute equipment or service during reasonable periods of malfunction or non-use pending completion of repairs under this warranty. Except for the Emissions warranty referenced below, if applicable, there is no other express warranty. All implied warranties of merchantability and fitness for use are limited to the duration of this express warranty.

Some states do not allow exclusions of incidental or consequential damages, or limitations on how long an implied warranty lasts, so the above exclusions and limitations may not apply to you.

This warranty gives you specific legal rights, and you may also have other rights which vary from state to state.

Note regarding engine warranty: The Emissions Control System on your Product may be covered by a separate warranty meeting requirements established by the U.S. Environmental Protection Agency (EPA) and/or the California Air Resources Board (CARB). The hour limitations set forth above do not apply to the Emissions Control System Warranty. Refer to the Engine Emission Control Warranty Statement printed in your operator's manual or contained in the engine manufacturer's documentation for details.

Countries Other than the United States or Canada

Customers who have purchased Toro products exported from the United States or Canada should contact their Toro Distributor (Dealer) to obtain guarantee policies for your country, province, or state. If for any reason you are dissatisfied with your Distributor's service or have difficulty obtaining guarantee information, contact the Toro importer. If all other remedies fail, you may contact us at Toro Warranty Company.

Part No. 374-0031 Rev. C