FORM NO. 3314-216

TORO®

MODEL NO. 26621-0000001 & UP

PARTS CATALOG

21" S.P. REAR BAGGER

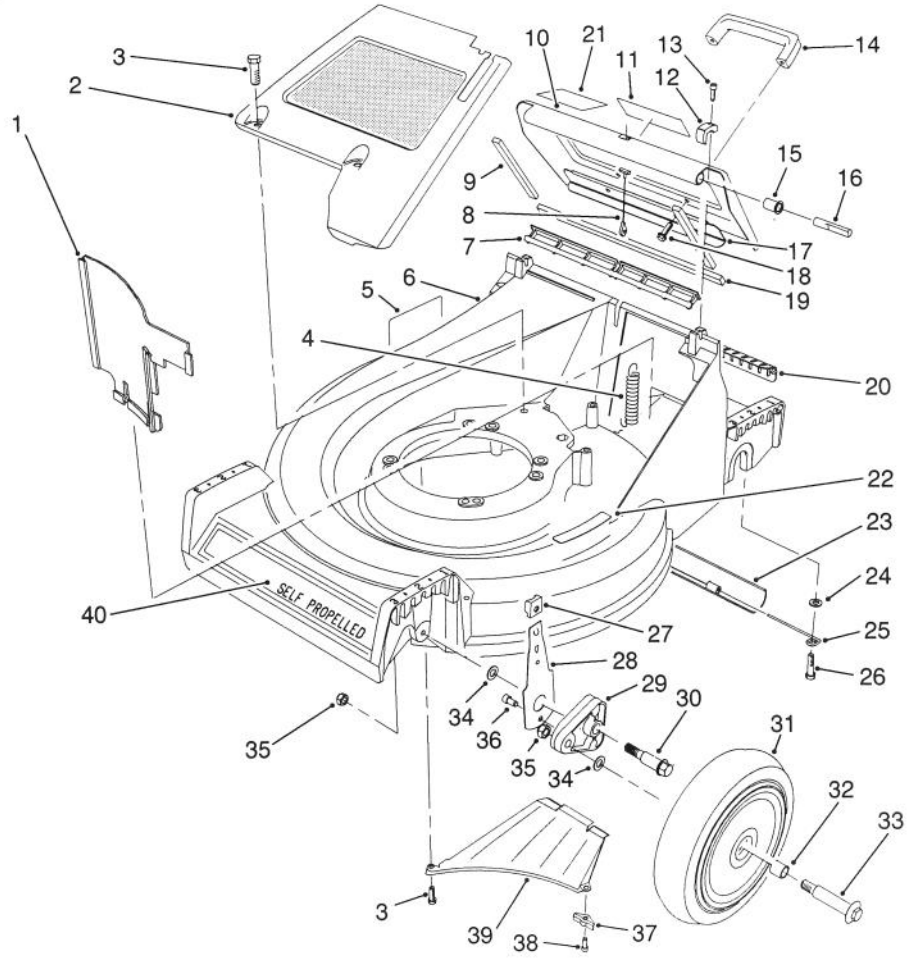

C-0559

HOUSING ASSEMBLY

Ref. No.	Part No.	Description	No. Used
1	66-0020	Panel - Vertical	1
2	65-5660	Panel - Screen	1
3	32144-70	Screw - Cap Hex. Hd.	3
4	65-5360	Spring - Extension	1
5	62-3860	Decal - Danger	1
6	13-5869	21" Housing Assembly (Incl. Ref. #5, 21-22, & 40)	1
7	65-5160	Seal - Door	1
8	65-5370	Cable - Door	1
9	65-5480	Seal - Door Side	2
10	13-2189	Door - Discharge (Incl. Ref. #9, 11, 17 & 19)	1
11	71-8370	Decal - Warning	1
12	65-5140	Clamp - Hinge	2
13	65-5210	Screw - Hex. Socket Hd.	2
14	65-5100	Handle - Door	1
15	65-5460	Bushing - Door	2
16	65-5290	Pin - Hinge	2

Ref. No.	Part No.	Description	No. Used
17	66-0610	Brace - Door	1
18	46-8091	Screw - Handle	2
19	65-5490	Seal - Door (End)	1
20	65-5150	Cover - Access	1
21	66-0680	Decal - French Regulation	1
22	62-3950	Decal - Step Pad	1
23	65-5350	Shield - Trailing	1
24	3256-23	Washer - Flat	2
25	76-1980	Hanger - Shield	2
26	5-2490	Screw - Shoulder	2
27	25-7740	Knob - Spring Arm	2
28	66-0540	Arm - Front Spring	2
29	66-0580	Arm - Front Pivot	2
30	66-0560	Screw - Shoulder	2
31	11-9509	Wheel & Tire Assembly (Incl. Ref. #30)	2
32	27-6250	Bushing - Wheel	4
33	27-6231	Bolt - Wheel	2

TPS

©The TORO Company - 1989

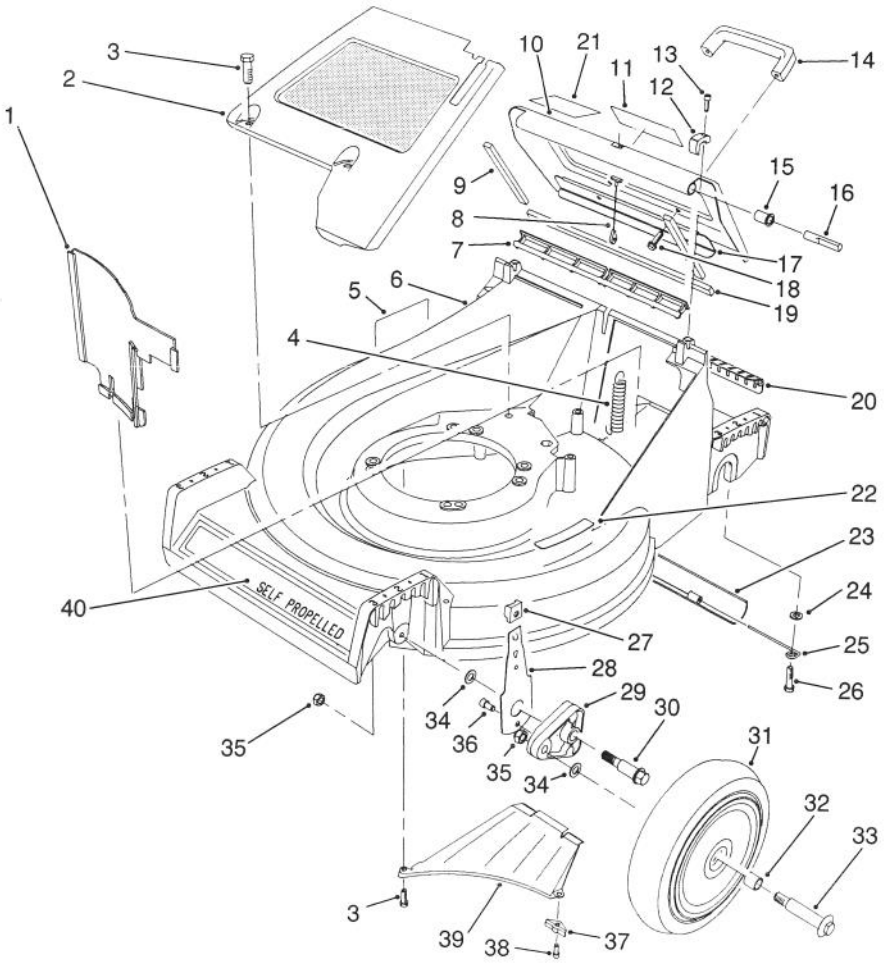

C-0559

HOUSING ASSEMBLY(Continued)

Ref. No.	Part No.	Description	No. Used
34	40-1940	Washer - Wheel	4
35	52-3620	Nut - Lock	4
36	65-5220	Screw - Cap Socket Hd.	2
37	66-0640	Bracket - Discharge	1

Ref. No.	Part No.	Description	No. Used
38	65-5221	Screw - Bracket	1
39	65-5010	Ramp - Discharge	1
40	70-7590	Decal - 53cm	1

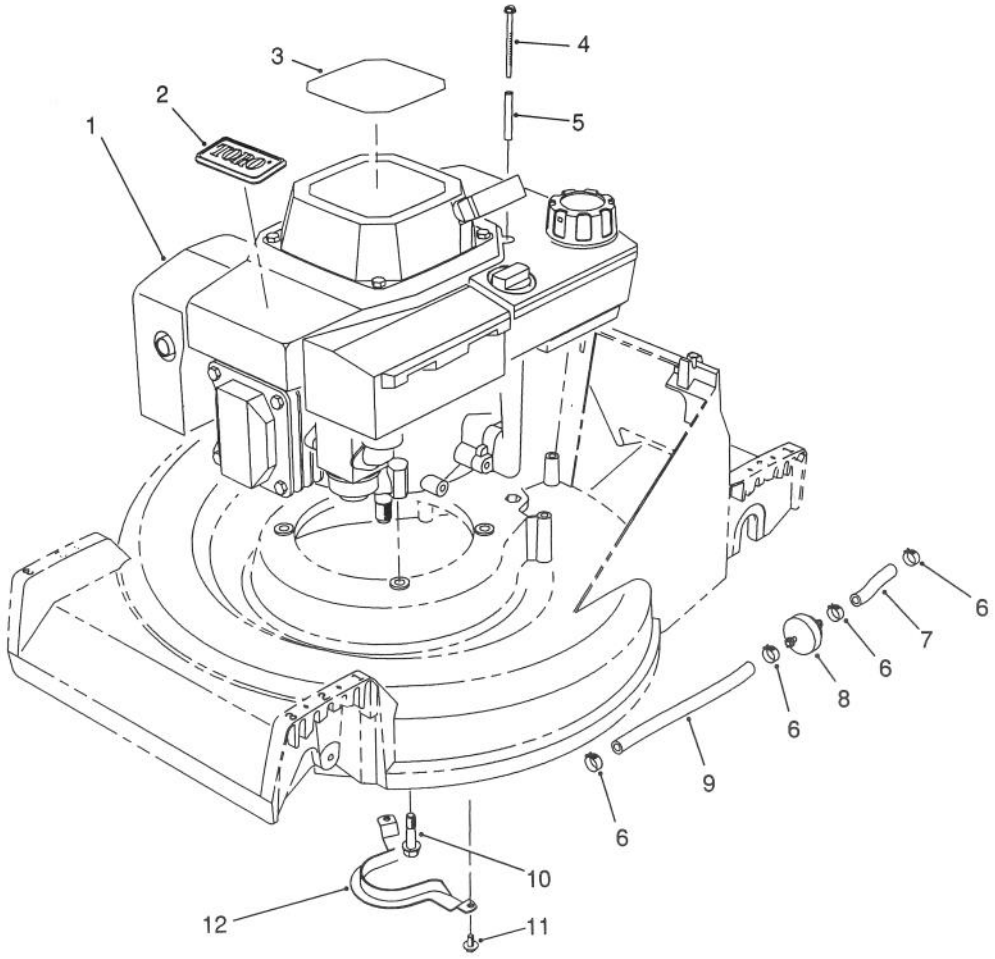

C-0181

ENGINE ASSEMBLY

Ref. No.	Part No.	Description	No. Used
1	72-4141	Engine - OHV	1
2	46-8290	Plate - TORO Logo	1
3	57-3120	Decal - Recoil	1
4	56-6610	Screw - Thread Forming	2
5	57-3830	Spacer - Tubular	2
6	2412-95	Clamp - Fuel Line	4
7	51-3211	Line - Fuel	1

Ref. No.	Part No.	Description	No. Used
8	56-6360	Filter - Fuel	1
9	51-3214	Line - Fuel	1
10	11-0590	Screw - Cap Hex. Hd.	3
11	32144-70	Screw - Cap Hex. Hd.	2
12	66-0570	Guide - Belt	1
*	75-9850	Tube - Oil Drain	1

*Not Illustrated

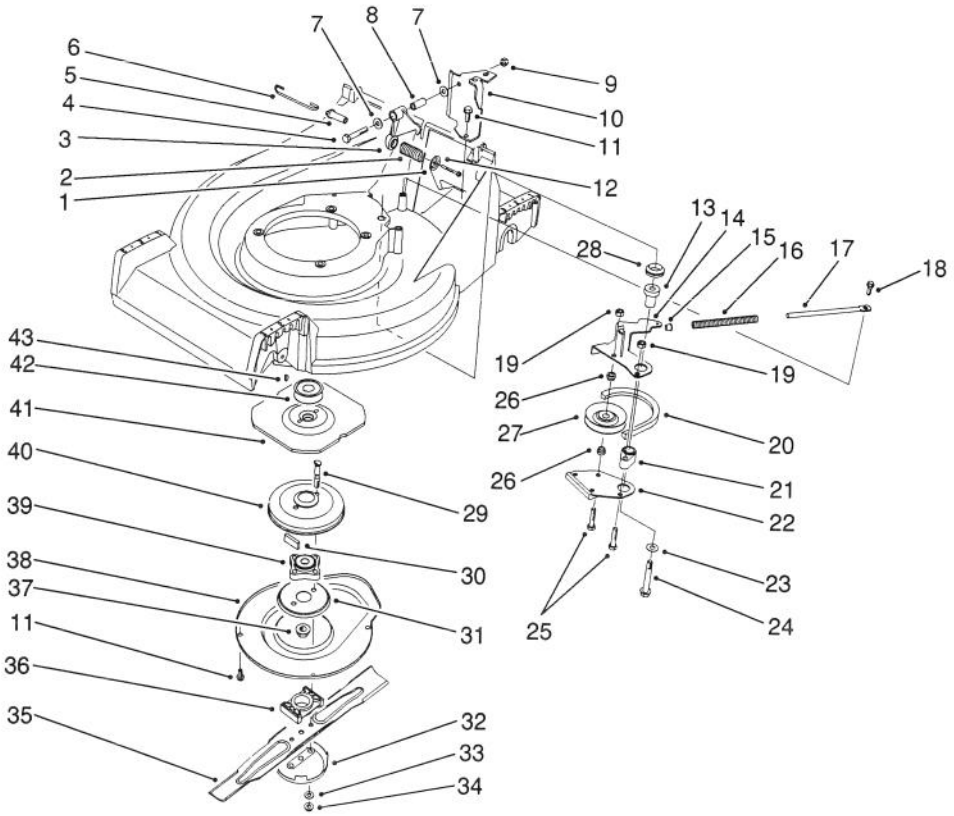

C-0525

BLADE BRAKE CLUTCH ASSEMBLY

Ref. No.	Part No.	Description	No. Used
1	65-5280	Retainer - Spring	1
2	71-3630	Spring - Compression	1
3	65-5700	Crank	1
4	322-21	Screw - Cap Hex. Hd.	1
5	71-3660	Pin - BBC Spring	1
6	71-3650	Link - Control	1
7	3256-23	Washer - Flat	2
8	65-5690	Bushing - Bellcrank	1
9	32128-44	Nut - Lock	1
10	66-0030	Bracket - Cable Support	1
11	32144-70	Screw - Cap Hex. Hd.	5
12	46-7040	Screw - Cap Hex. Hd.	1
13	65-5720	Bushing - BBC	1
14	66-0090	Lever - Brake	1
15	66-0350	Bushing - Flange	1
16	71-3640	Spring - Compression	1
17	65-5320	Rod - Brake Spring	1
18	65-5670	Bolt - Shoulder	1
19	3296-42	Nut - Lock	2
20	65-5740	Belt - BBC	1
21	65-5070	Hub - Brake Plate	1
22	65-5780	Brake Plate Assembly	1

Ref. No.	Part No.	Description	No. Used
23	65-5380	Washer	1
24	11-0580	Screw - Cap Hex. Hd.	1
25	321-13	Screw - Cap Hex. Hd.	2
26	65-5130	Hub - Idler Pulley	2
27	46-5650	Idler Pulley Assembly	1
28	253-151	Seal - V-Ring	1
29	42-3190	Screw - BBC	2
30	52-3480	Dampner - Vibration	2
31	65-5330	Screen - BBC	1
32	42-0910	Cup - Anti Scalp	1
33	40-1940	Washer - Flat	2
34	3296-6	Nut - Lock	2
35	62-7700	Blade - 21"	1
36	62-4280	Spacer - Blade	1
37	3296-33	Nut - Lock	1
38	65-5200	Cover - BBC	1
39	42-6890	Hub Assembly	1
40	62-3890	Drum - Brake	1
41	65-5300	Flywheel - BBC	1
42	62-7560	Pulley - Engine	1
43	3257-3	Key - Woodruff	1

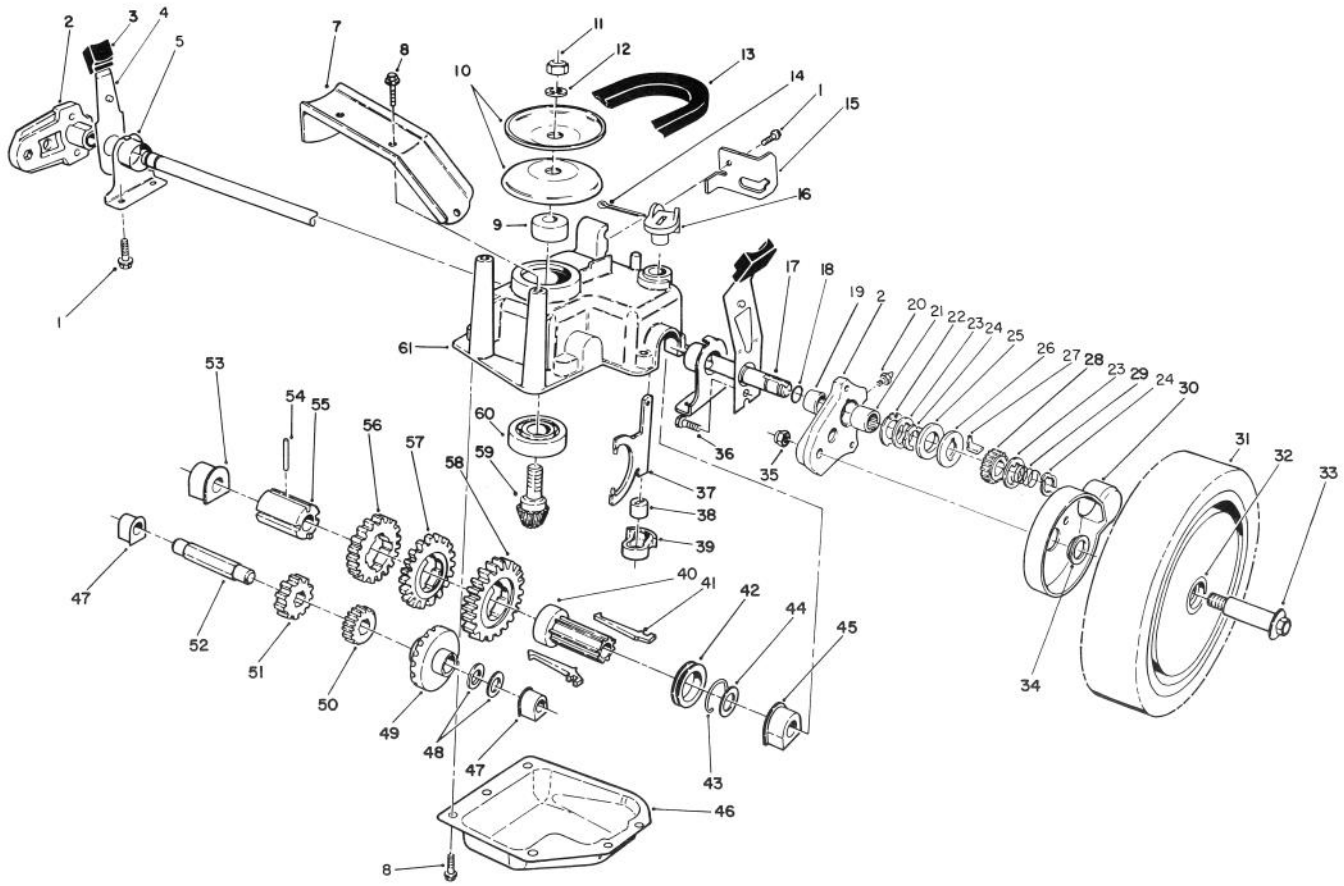

C-0549

GEAR CASE ASSEMBLY

Ref. No.	Part No.	Description	No. Used
1	32144-70	Screw - Hex. Washer Hd.	3
2	65-5042	Pivot Arm Assembly (Incl. Ref. #19-21)	2
3	25-7740	Knob - Arm	2
4	65-5440	Spring Arm Assembly	2
5	66-0360	Cap - End	2
7	65-5190	Bracket - Belt Guide	1
8	49-2040	Screw - Self Tapping	8
9	62-6660	Spacer	1
10	60-8840	Pulley - Half	2
11	3296-5	Nut - Lock	1
12	3256-24	Washer - Flat	1
13	66-0210	V-Belt	1
14	3272-5	Pin - Cotter	1
15	76-2930	Retainer - Cable	1
16	76-0920	Lever - Shift	1
17	65-4770	Shaft - Output	1
18	237-153	Seal - O-Ring	2
19	70-9760	Bushing - Sleeve	2
20	302-56	Fitting - Grease	2
21	48-2060	Bearing -Needle	2
22	65-4730	Washer - Thrust (Inner)	2
23	65-4740	Washer - Thrust (Keyed)	4

Ref. No.	Part No.	Description	No. Used
24	65-2720	Ring - Retaining	4
25	65-4710	Ring - Friction	2
26	65-4760	Washer -Clutch	2
27	66-6050	Key - Rocking (L.H.)	1
*	66-6040	Key - Rocking (R.H.)	1
28	65-4750	Pinion	2
29	65-4720	Spring - Compression	2
30	74-1660	Cover - Wheel	2
31	11-9519	Wheel Tire & Gear Assy. (Incl. Ref. #32)	2
32	27-6250	Bushing - Wheel	4
33	27-6231	Bolt - Wheel	2
34	74-1670	Spacer - Wheel Cover	2
35	3296-6	Nut - Lock	2
36	65-5220	Screw - Cap Socket Hd.	2
37	60-8870	Yoke - Shift	1
38	29-9570	Bushing - Yoke	1
39	60-8810	Retainer - Shift Fork	1
40	76-0780	Sleeve - Shift Key	1
41	76-0760	Key - Shift	2
42	76-0770	Collar - Shift	1
43	65-5250	Clip - Spring	1
44	36-4780	Washer - Thrust	1

*Not Illustrated

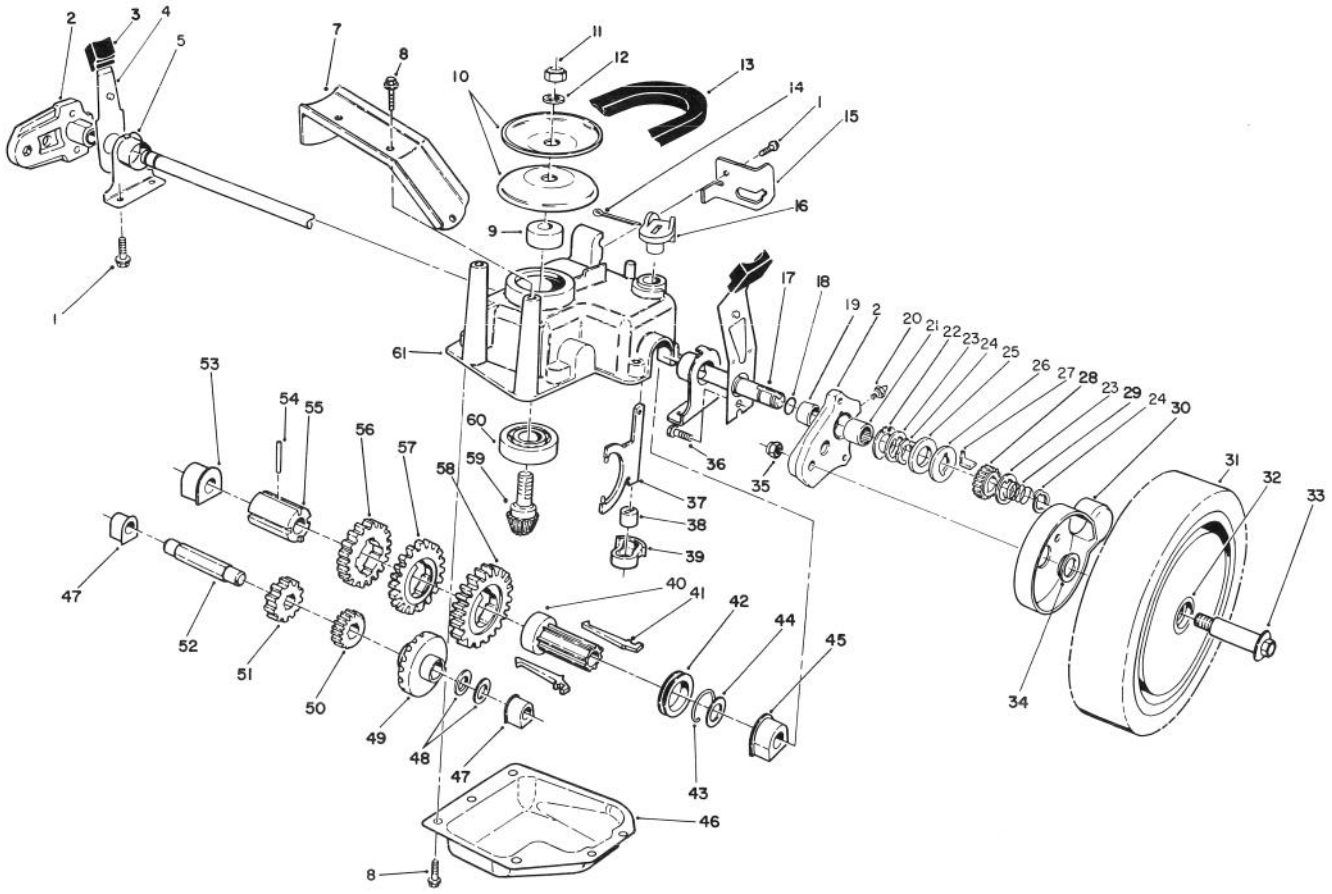

C-0549

GEAR CASE ASSEMBLY (Continued)

Ref. No.	Part No.	Description	No. Used
45	60-8770	Bushing - Output Shaft	1
46	60-8730	Cover - Gear Case	1
47	60-8750	Bushing - Intrmdt. Shaft	2
48	36-4791	Washer - Thrust	2
49	55-3760	Gear - Pinion 15T	1
50	55-3780	Gear - Pinion 20T	1
51	55-3800	Gear - Pinion 25T	1
52	60-8800	Shaft - Intermediate	1
53	60-8850	Bushing - Output Shaft	1

Ref. No.	Part No.	Description	No. Used
54	32121-120	Pin - Coil	1
55	60-8790	Sleeve - Gear	1
56	55-3810	Gear - 39T (3rd Gear)	1
57	55-3790	Gear - 44T (2nd Gear)	1
58	55-3770	Gear - 49T (1st Gear)	1
59	60-8890	Pinion - Bevel	1
60	38-7820	Bearing - Ball	1
61	60-8710	Case - Gear (Upper)	1
*	62-6673	Gear Case Assy. Complete	1

*Not Illustrated

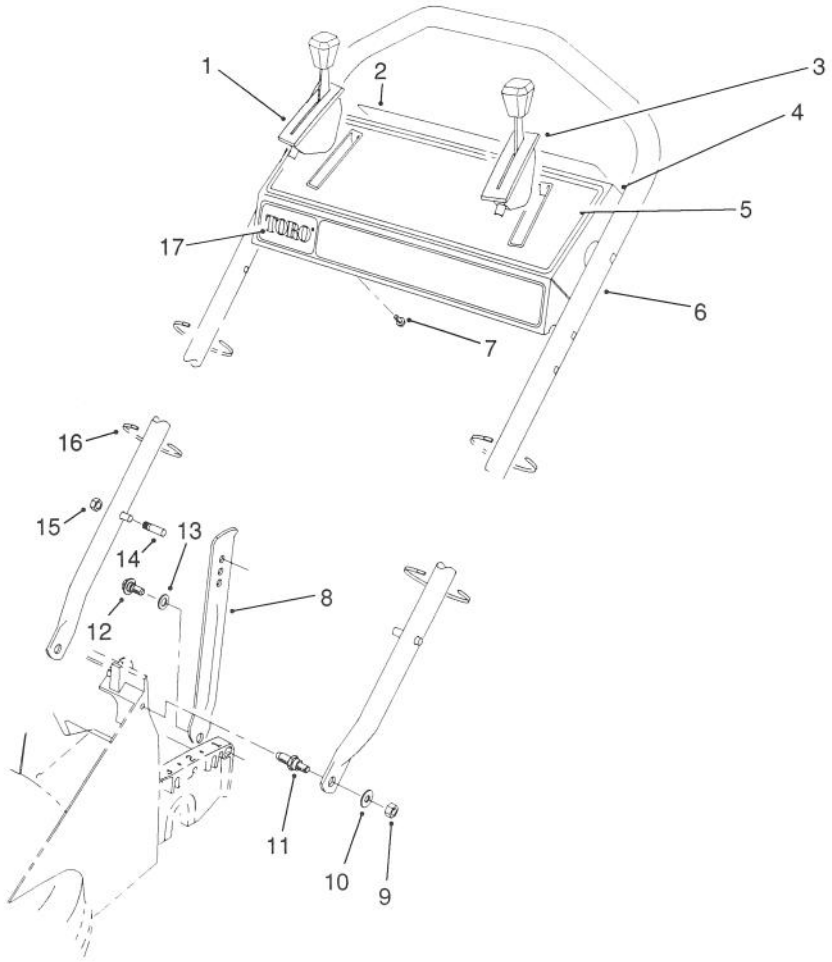

C-0173

HANDLE ASSEMBLY

Ref. No.	Part No.	Description	No. Used
1	76-2710	Control - Ground Speed Bend Type #3 Sheath Lg. 51-1/4" Wire Lg. 2-1/4"	1
2	66-1790	Decal - Danger	1
3	66-0230	Control - Throttle Bend Type #1 Sheath Lg. 44-3/4" Wire Lg. 2-3/4"	1
4	13-6269	Control Panel Assembly (Incl. Ref. #2, 5 & 17)	1
5	66-0260	Decal - Instruction	1
6	66-0320	Handle	1
7	32104-76	Screw - Self Tapping	4
8	65-5730	Latch - Handle	2
9	3296-29	Nut - Lock	2
10	3256-23	Washer - Flat	2
11	66-0450	Screw - Shoulder Stud	2
12	5-2490	Screw - Shoulder	2
13	256-313	Washer - Nylon	2
†14	49-2750	Pin - Handle	2
†15	3296-47	Nut - Lock	2
16	3290-378	Tie - Cable	4
17	66-1770	Decal - TORO	1

†Service Replacement Parts

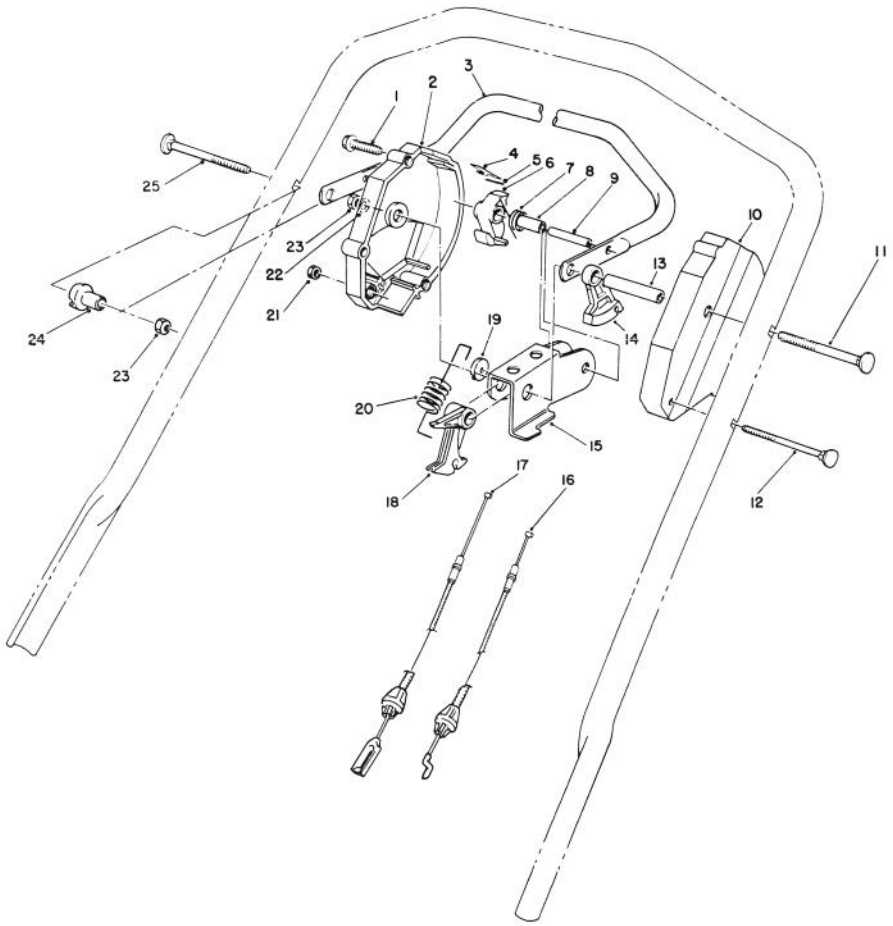

C-0153

TRACTION CONTROL ASSEMBLY

Ref. No.	Part No.	Description	No. Used
1	46-7040	Screw - Hex. Washer Hd.	3
2	66-0160	Housing - Control R.H.	1
3	52-7430	Control Bar Assembly	1
4	52-7410	Spring - Leaf	1
5	57-6290	Pin - Insert	1
6	46-5530	Hook - Control	1
7	46-5510	Spring - Torsion	1
8	46-5550	Bushing - Sleeve	1
9	32121-9	Pin - Coil	1
10	46-5460	Housing - Control (L.H.)	1
11	17-9425	Screw - Handle	1
12	46-6431	Screw - Handle	1
13	46-5590	Spacer	1

Ref. No.	Part No.	Description	No. Used
14	46-5520	Lever - Traction	1
15	66-0180	Rocker	1
16	65-5520	Cable - Traction	1
17	66-0730	Cable - Clutch	1
18	46-5540	Lever - Cable	1
19	66-0170	Washer - Nylon	1
20	66-0190	Spring - Detent	1
21	3296-8	Nut - Lock	1
22	3256-23	Washer - Flat	2
23	3296-29	Nut - Lock	2
24	66-0330	Support - Spacer	1
25	17-9426	Screw - Handle	1

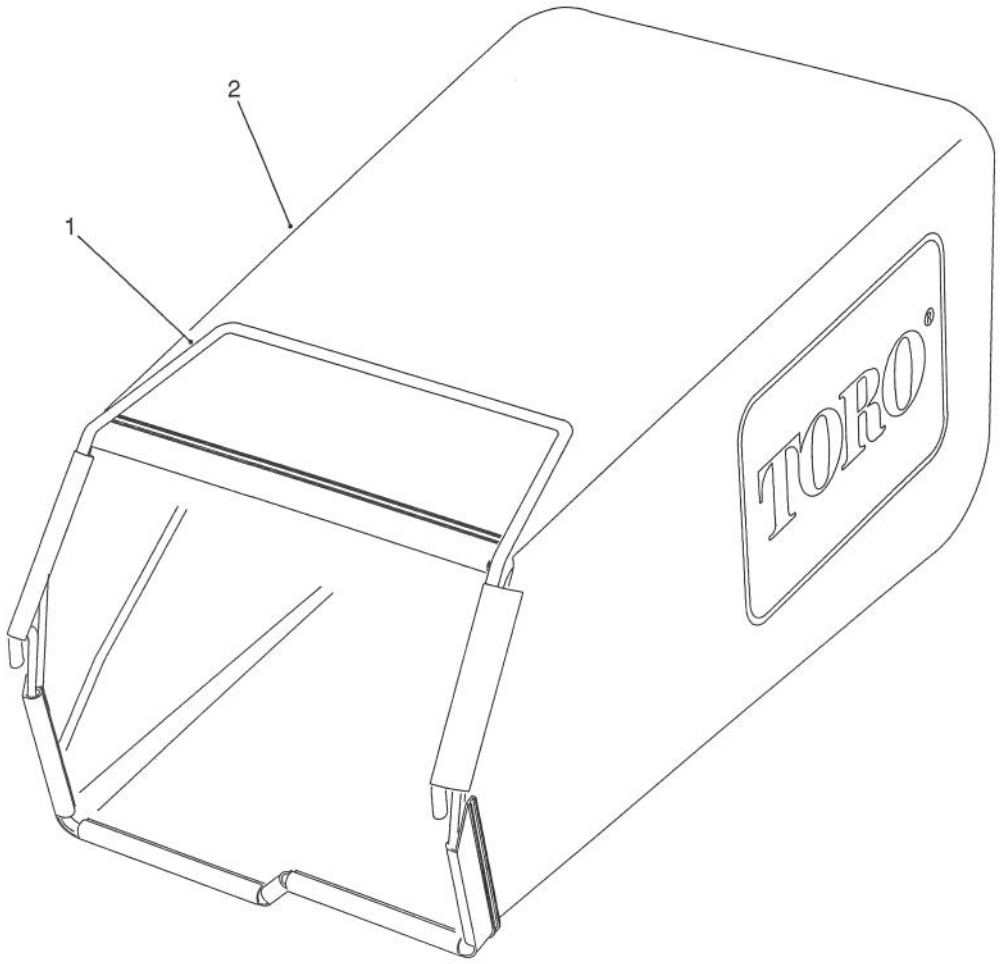

C-0168

GRASS BAG ASSEMBLY

Ref. No.	Part No.	Description	No. Used
1	76-1790	Frame - Grass Bag	1
2	66-0010	Bag	1

Ref. No.	Part No.	Description	No. Used
*		Grass Bag Assembly (Incl. Ref. #1 & 2)	1

*Not Illustrated

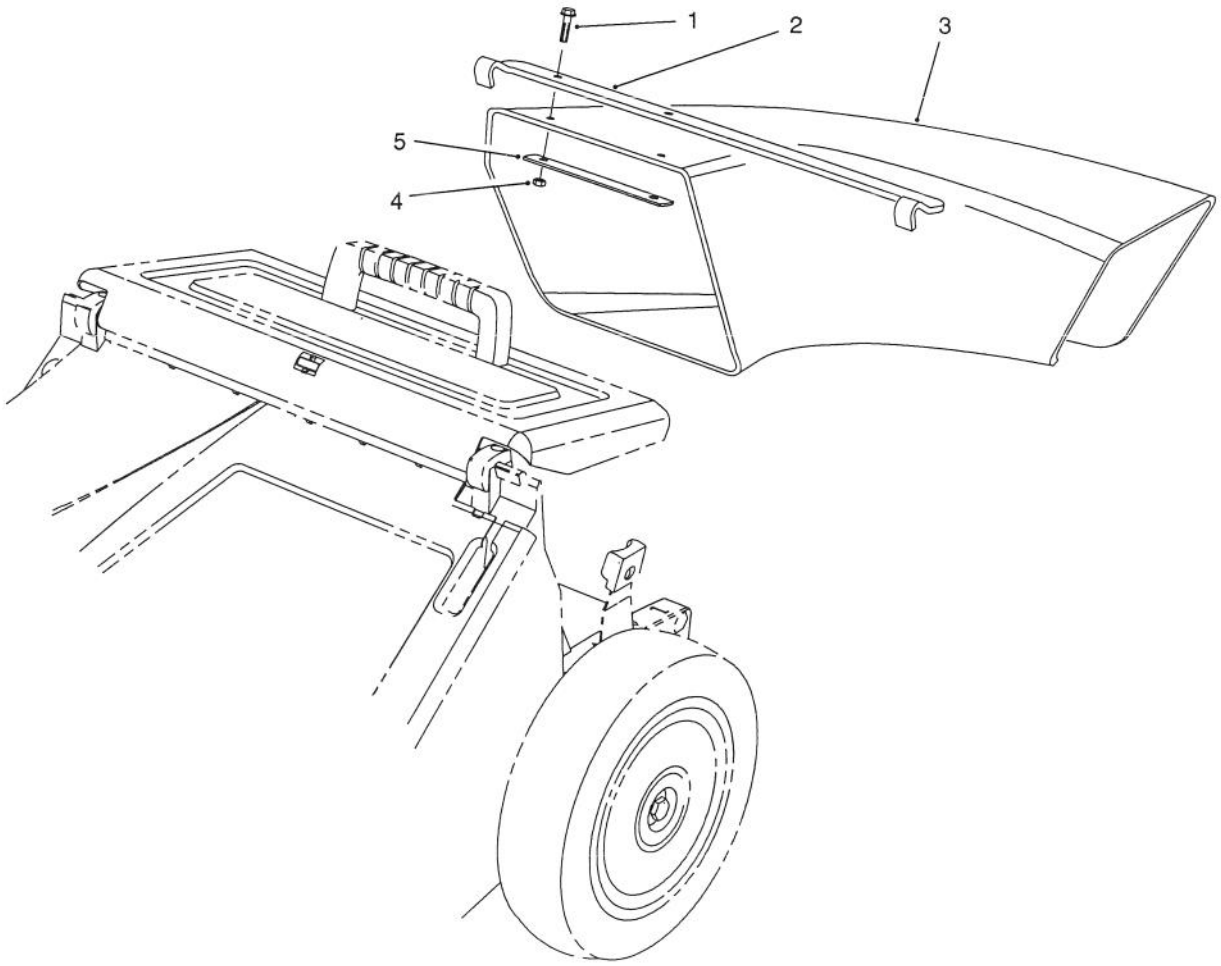

C-0169

SIDE DISCHARGE CHUTE MODEL NO. 59112 (Optional)

Ref. No.	Part No.	Description	No. Used
1	3290-126	Screw - Hex. Washer Hd.	2
2	66-0070	Bracket - Chute Hanger	1
3	65-5240	Chute - Discharge	1

Ref. No.	Part No.	Description	No. Used
4	3296-12	Nut - Lock	2
5	66-0060	Plate - Stress	1

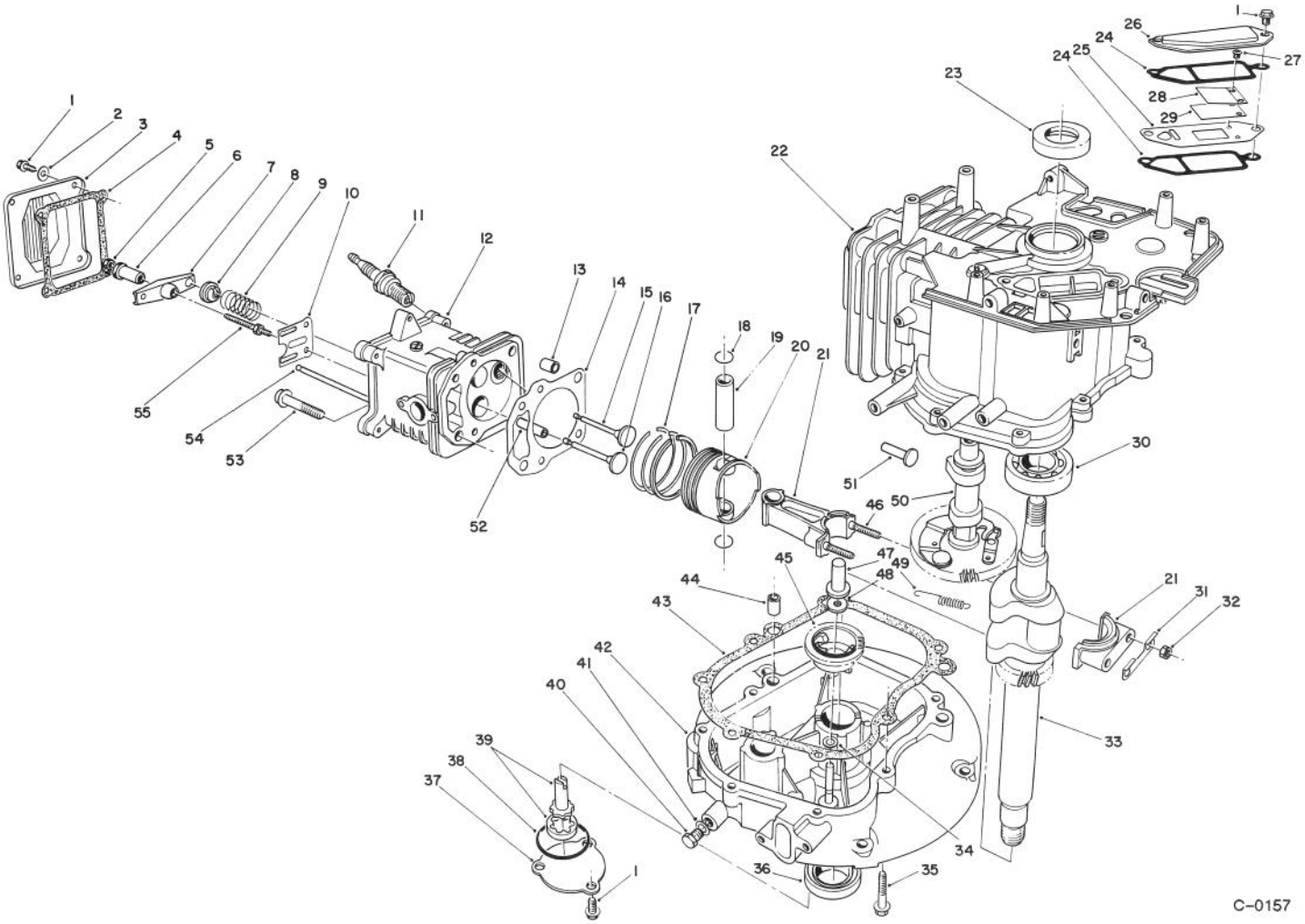

CRANKCASE ASSEMBLY
(Engine Model No. VMK9-2)

Ref. No.	Part No.	Description	No. Used
1	81-1170	Bolt	9
2	81-3790	Washer	4
3	81-3780	Cover - Rocker Arm	1
4	81-3770	Gasket - Cover	1
5	81-3760	Nut - Jam	2
6	81-3750	Pivot - Rocker Arm	2
7	81-3740	Arm - Rocker	2
8	81-3730	Retainer - Valve Spring	2
9	81-3720	Spring - Valve	2
10	81-3710	Guide - Push Rod	1
11	81-3250	Plug - Spark	1
12	81-5540	Head - Cylinder (Incl. Ref. #52)	1
13	81-3690	Pin - Dowel	2
14	81-4710	Gasket - Cylinder Head	1
*	81-3820	Gasket Set	1
15	81-3660	Valve - Exhaust	1
16	81-3670	Valve - Intake	1
17	81-3650	Piston Ring Set	1
18	50-0960	Circlip	2
19	81-3630	Pin - Piston	1
20	81-3620	Piston	1

Ref. No.	Part No.	Description	No. Used
21	81-3390	Connecting Rod Assembly (Incl. Ref. #31, 32 & 46)	1
22	81-3280	Block - Engine (Incl. Ref. #23 & 30)	1
23	81-3290	Seal - Upper Crankshaft	1
24	81-3300	Gasket - Breather	2
25		Plate - Breather	1
26	81-3320	Cover - Breather	1
27		Screw - Reed Valve	2
28		Retainer - Reed Valve	1
29		Valve - Reed	1
*	81-3370	Reed Valve Assembly (Incl. Ref. # 25 & 27-29)	1
30	81-3380	Bearing - Ball	1
31	81-3400	Plate - Lock	1
32	50-0510	Nut	2
33	81-3430	Crankshaft	1
34	81-3440	Washer	1
35	81-3450	Bolt	7
36	81-3460	Seal - Lower Crankshaft	1
37	81-3470	Cover - Oil Pump	1
38	81-3480	Seal - O-Ring	1
39	81-3490	Oil Pump Assembly	1

*Not Illustrated

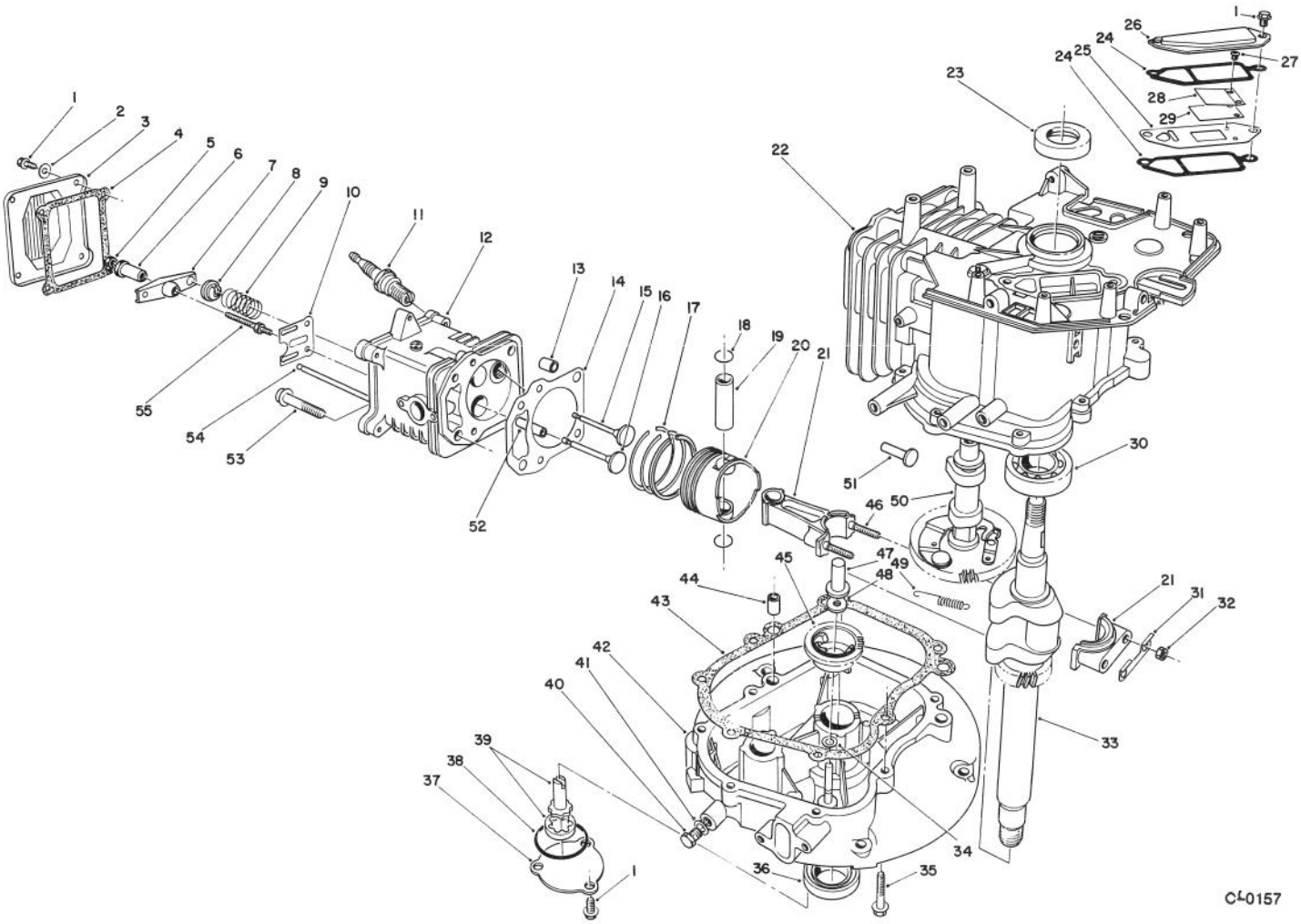

CRANKCASE ASSEMBLY (Continued)
(Engine Model No. VMK9-2)

Ref. No.	Part No.	Description	No. Used
40	81-4970	Plug - Oil Drain	1
41	81-3510	Gasket - Oil Plug	1
42	81-3520	Crankcase - Lower	1
43	81-3530	Gasket - Crankcase	1
44	50-0450	Pin - Dowel	2
45	81-3550	Governor Flyweight Assy.	1
46	81-3610	Stud - Connecting Rod	2
47	81-3560	Plunger - Governor	1
48	81-3570	Washer	1
49	81-3580	Spring - Comp. Release	1
50	81-5550	Camshaft Assembly (Incl. Ref. #49)	1
51	81-3600	Tappet	2
52	81-3830	Guide - Valve	2
53	50-0190	Bolt	4
54	81-3810	Rod - Push	2
55	81-3800	Stud - Rocker Arm	2
*	13-5939	Short Block Assembly	1

*Not Illustrated

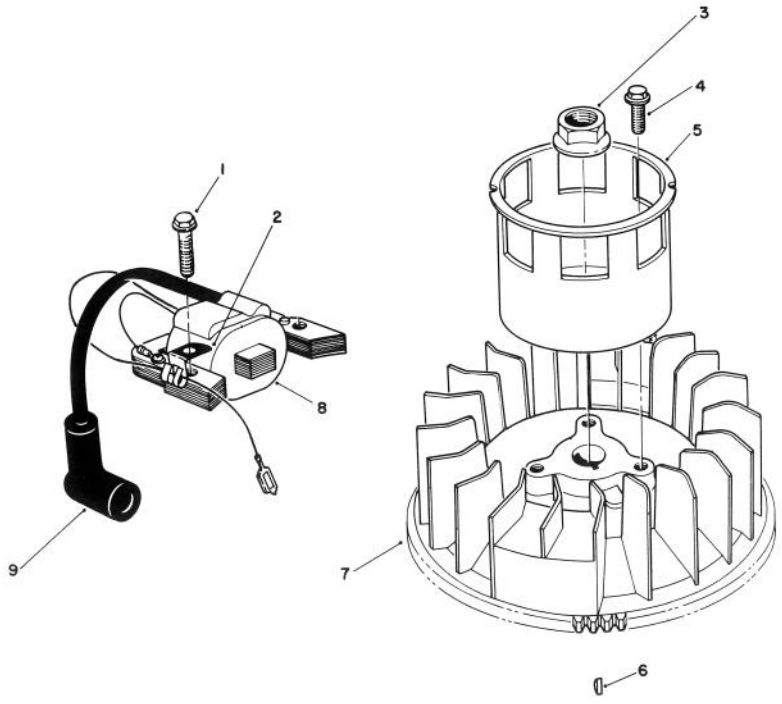

T-0723

MAGNETO & FLYWHEEL ASSEMBLY (Engine Model No. VMK9-2)

Ref. No.	Part No.	Description	No. Used
1	53-0860	Bolt	2
2	81-1480	Clamp	1
3	81-3890	Nut	1
4	81-1300	Bolt	3
5	81-3910	Cup - Starter	1

Ref. No.	Part No.	Description	No. Used
6	81-3930	Key - Flywheel	1
7	81-3920	Flywheel	1
8	81-5580	Magneto Coil Assembly	1
9	81-3860	Cover - Spark Plug	1

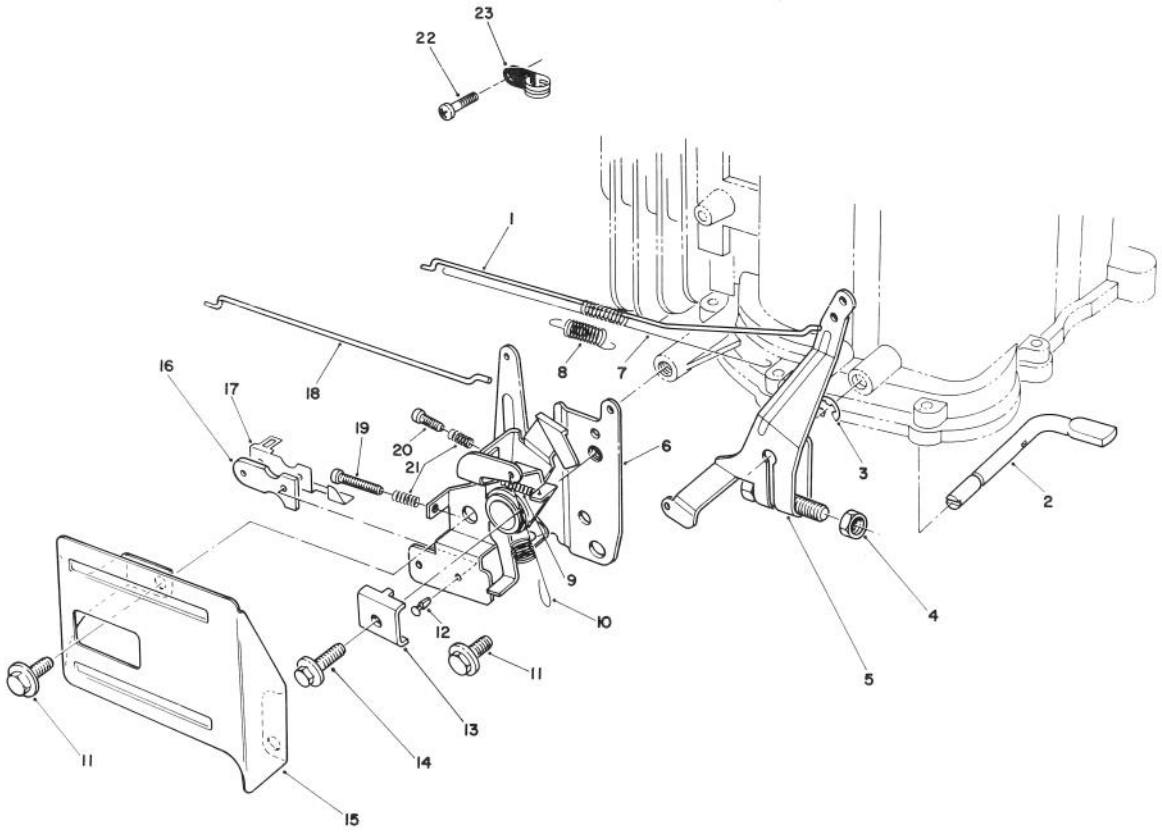

C-0159

GOVERNOR ASSEMBLY
(Engine Model No. VMK9-2)

Ref. No.	Part No.	Description	No. Used
1	81-4450	Rod - Carburetor	1
2	81-4480	Shaft - Governor	1
3	81-4540	E-Ring	1
4	81-3760	Nut	1
5	81-4500	Governor Arm Assembly	1
6	81-4510	Throttle & Choke Control	1
7	81-4470	Spring - Carburetor Rod	1
8	81-4460	Spring - Choke Lever	1
9	81-4570	Spring	1
10	81-4520	Spring - Governor	1
11	81-1170	Bolt	2
12	81-4530	Rivet	2

Ref. No.	Part No.	Description	No. Used
13	81-1690	Clamp - Cable	1
14	50-0130	Bolt	1
15	57-5750	Guard - Throttle	1
16	81-1830	Insulator - Kill Switch	1
17	81-1840	Terminal - Switch	1
18	81-4440	Rod - Choke	1
19	81-4560	Screw	1
20	81-4550	Screw	1
21	81-2900	Spring	2
22	81-0380	Screw	1
23	81-4780	Clamp	1

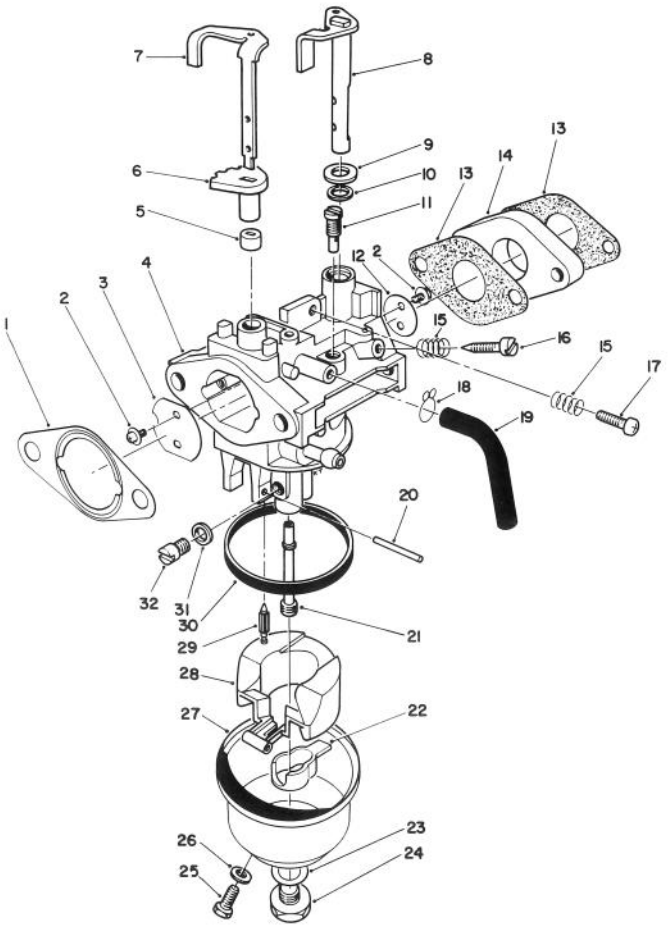

C-0160

CARBURETOR ASSEMBLY (Engine Model No. VMK9-2)

Ref. No.	Part No.	Description	No. Used
1	81-4250	Gasket - Air Cleaner	1
2	81-2710	Screw - Choke Valve	4
3	81-2720	Valve - Choke	1
4		Body - Carburetor	1
5	81-5530	Ring - Choke (Lower)	1
6	81-5520	Ring - Choke (Upper)	1
7	81-5510	Shaft - Choke Control	1
8	81-2920	Shaft - Throttle Valve	1
9	81-4280	Washer	1
10	81-4290	Seal - Throttle Shaft	1
11	81-5620	Jet - Pilot (#38.8)	1
12	81-2940	Valve - Throttle	1
13	81-5560	Gasket - Carburetor	2
14	81-5570	Block - Insulator	1
15	81-2580	Spring - Pilot Screw	2
16	50-2360	Screw - Pilot	1
17	50-0250	Screw - Idle Stop	1
18	81-4300	Clamp	1
19	81-4310	Tube - Bowl Vent	1
20	81-5600	Pin - Hinge	1

Ref. No.	Part No.	Description	No. Used
21	81-5630	Nozzle - Main	1
22	81-4940	Spacer - Float	1
23	81-2650	Gasket - Bowl Screw	1
24	81-2660	Screw - Bowl	1
25	81-2670	Screw - Drain	1
26	81-2680	Gasket - Drain Screw	1
27	81-4340	Bowl - Float	1
28	81-4920	Float	1
29	81-4700	Needle	1
30	81-2630	Gasket - Float Bowl	1
31	81-4350	Spacer	1
32	81-5610	Jet - Main (#70)	1
*	81-5640	Jet - Main (#77.5 High Alt.)	1
*	81-4270	Choke Shaft Assembly (Incl. Ref. #5-7)	1
*	81-5650	Carburetor Repair Kit (Incl. Ref. #1, 13, 23, 26, 29 & 30)	1
*	81-5590	Carburetor Assembly (Incl. Ref. #2-32)	1

*Not Illustrated

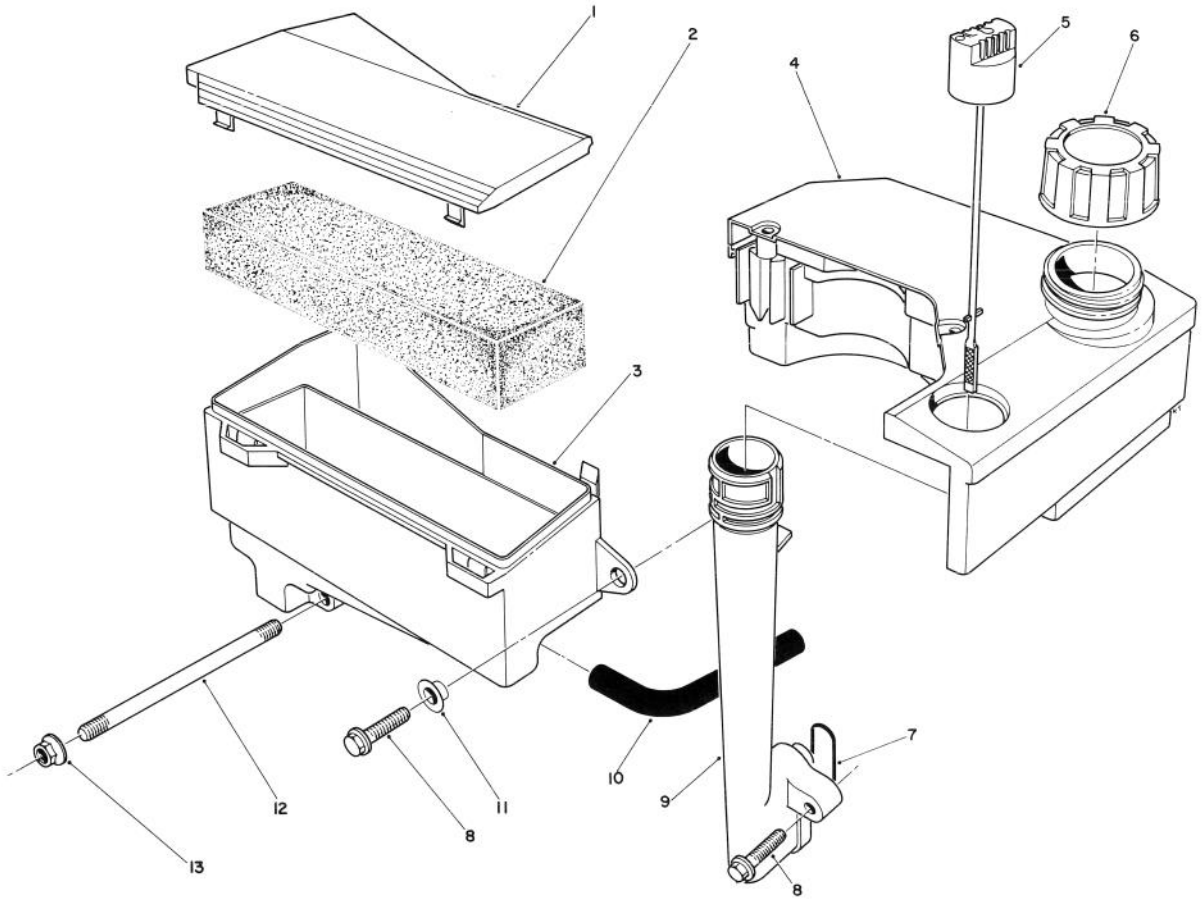

C-0161

AIR CLEANER & FUEL TANK ASSEMBLY (Engine Model No. VMK9-2)

Ref. No.	Part No.	Description	No. Used
1	81-4110	Cover - Air Cleaner	1
2	81-4120	Filter - Foam	1
3		Body - Air Cleaner	1
4	55-3530	Tank - Fuel	1
5	81-4140	Dipstick - Oil	1
6	55-3570	Cap - Gas	1
7	81-4150	Seal - Oil Tube	1
8	81-4160	Bolt	3

Ref. No.	Part No.	Description	No. Used
9	81-4170	Tube - Oil Fill	1
10	81-4180	Hose - Crankcase Breather	1
11	81-4200	Spacer	1
12	81-4220	Stud - Carburetor	2
13	50-7180	Nut	2
*	81-4240	Air Cleaner Assembly (Incl. Ref. #1 & 3)	1

*Not Illustrated

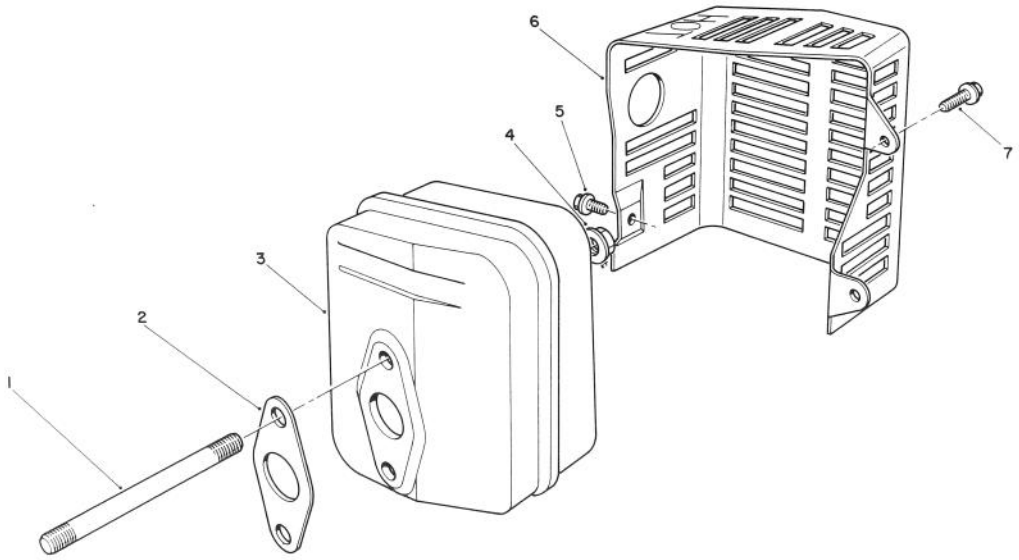

T-0726

MUFFLER ASSEMBLY
(Engine Model No. VMK9-2)

Ref. No.	Part No.	Description	No. Used
1	81-4380	Stud - Muffler	2
2	81-4390	Gasket - Muffler	1
3	81-4400	Muffler	1
4	50-0530	Nut	2
5	81-4420	Screw	1

Ref. No.	Part No.	Description	No. Used
6	81-4430	Cover - Muffler	1
7	81-1170	Bolt	2
*	56-6730	Spark Arrester Kit (Incl. Ref. #2) Optional	1

*Not Illustrated

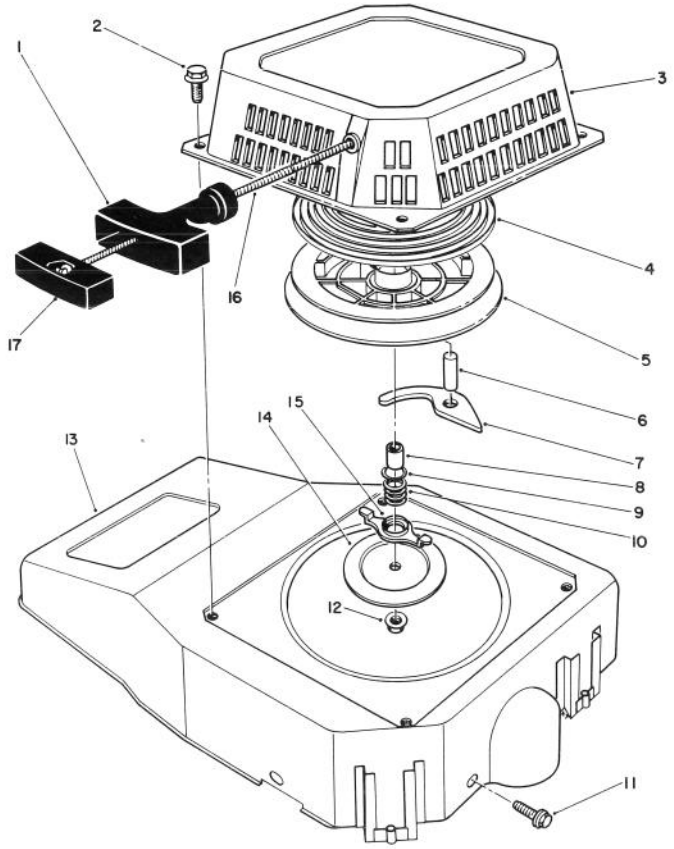

C-0162

RECOIL ASSEMBLY
(Engine Model No. VMK9-2)

Ref. No.	Part No.	Description	No. Used
1	81-4000	Handle	1
2	81-1280	Bolt	4
3	81-3970	Case - Recoil	1
4	81-4010	Spring - Recoil	1
5	81-4020	Reel - Rope Pulley	1
6	81-4030	Pin	1
7	81-4040	Pawl	1
8	81-4050	Spacer	1
9	81-4060	Washer	1
10	81-4070	Spring - Friction	1

Ref. No.	Part No.	Description	No. Used
11	81-1170	Bolt	3
12	81-4100	Nut - Lock	1
13	81-3960	Shroud - Blower	1
14	81-4090	Plate - Friction	1
15	81-4080	Guide - Pawl	1
16	81-1270	Rope - Recoil	1
17	81-4960	Retainer - Rope	1
*	81-3270	Recoil Starter Assembly (Incl. Ref. #1, 3-10, 12 & 14-17)	1

*Not Illustrated

PRODUCT CHANGES

In an effort to make improvements available to TORO owners as quickly as possible, minor changes are incorporated into Toro's products from time to time that do not become immediately shown in the Parts Catalog. If such a change has been made in your unit, which is not reflected in your manual, see your TORO Distributor or his Authorized TORO Service Dealer for information and part numbers.

IDENTIFICATION AND ORDERING

MODEL AND SERIAL NUMBERS

The Lawnmower has two identification numbers; a model number and a serial number. The two numbers are stamped on a decal which is located on the rear of the housing. In any correspondence concerning the lawnmower, supply model and serial numbers to assure that correct information and replacement parts are obtained.

To order replacement parts from an Authorized TORO Service Dealer, supply the following information:

1. Model and serial number of the lawnmower.
2. Part number, description, and the quantity of part(s) desired.

NOTE: Do not order by reference number if a parts catalog is being used; use the PART NUMBER.

COUNTRIES OTHER THAN THE UNITED STATES OR CANADA

Customers who have purchased TORO products exported from the United States or Canada should contact their Toro Distributor (Dealer) to obtain guarantee policies for your country, province or state. If for any reason you are dissatisfied with your Distributor's service or have difficulty obtaining guarantee information, contact the TORO importer. If all other remedies fail, you may contact us at The Toro Company.

MAINTENANCE RECORD

Date								

MAINTENANCE RECORD

Date								