FORM NO. 3314-247

TORO®

MODEL NO. 20668-0000001 & UP

PARTS CATALOG

21" S.P. REAR BAGGER

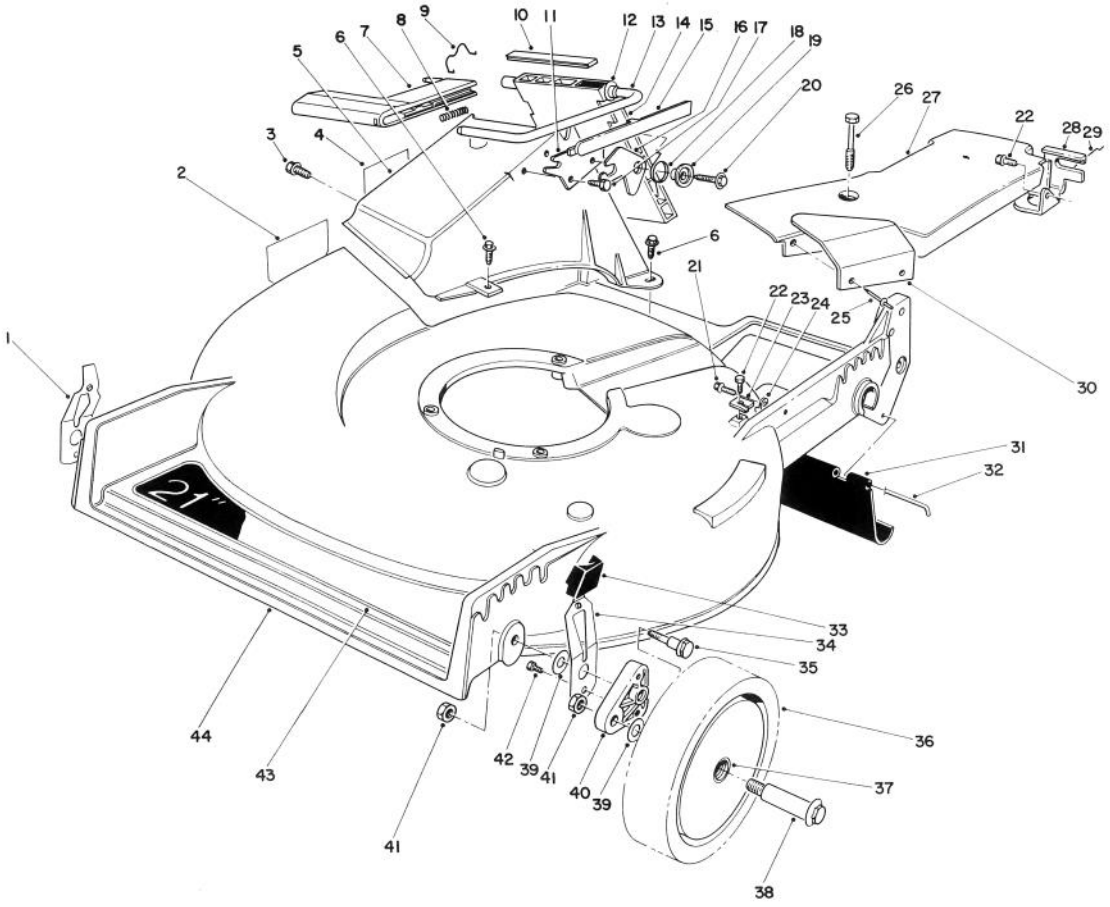

C-0578

HOUSING ASSEMBLY

Ref. No.	Part No.	Description	No. Used
1	71-0560	Spring Arm Ass'y - R.H.	1
2	56-6270	Decal - Danger	1
3	46-6810	Screw - Hex Washer Hd. Thread Forming	1
4	62-4060	Decal - Danger	1
5	11-6239	Tunnel - Discharge (Incl. Ref. #4)	1
6	46-6811	Screw w/Washer	3
7	46-3520	Handle - Door	1
8	46-7060	Spring - Compression	1
9	47-5840	Retainer - Door	1
10	46-6821	Cover - Door	1
11	23-1040	Plate - Latch	1
12	23-0880	Bushing	1
13	46-3530	Rod - Door	1
14	46-3511	Door - Discharge	1
15	49-4170	Cover - Handle	1
16	42-4010	Latch - Door	1

Ref. No.	Part No.	Description	No. Used
17	46-8090	Screw - Hex Washer Hd. Self Tapping	1
18	33-4860	Spring - Torsion	1
19	43-4840	Spacer - Latch	1
20	46-8091	Screw - Hex Washer Hd. Tapping	1
21	12-5450	Screw	1
22	32144-70	Screw - Hex Washer Hd. Thread Forming	2
23	62-3720	Clamp - Cable	1
24	2412-83	R-Clamp	1
25	3295-35	Rivet	2
26	37-7260	Capscrew - Special	2
27	52-7406	Belt Cover Assembly (Incl. Ref. #25 & 30)	1
28	62-3940	Bracket - Traction Adjust.	1
29	46-7030	Retainer - Cable	1
30	77-0280	Shield - Heat	1

©The TORO Company - 1990

TPS

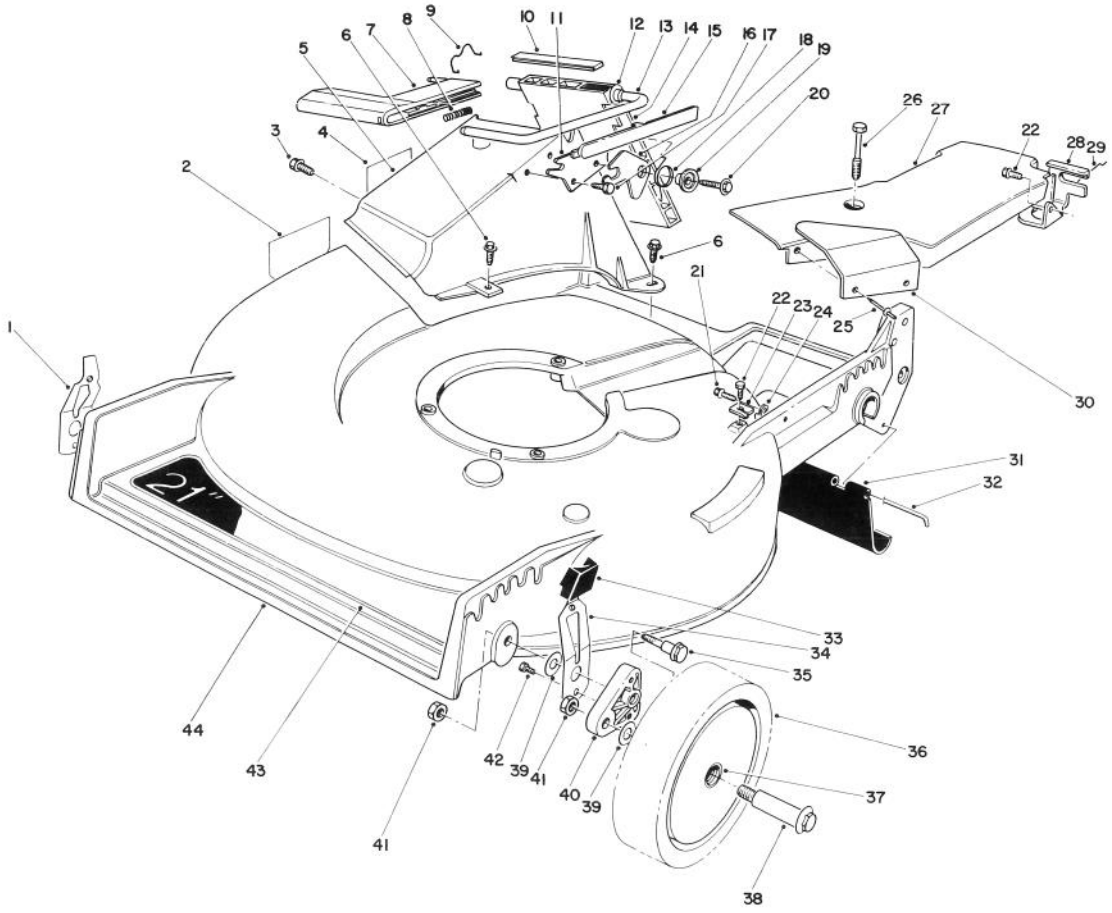

C-0578

HOUSING ASSEMBLY (CONTINUED)

Ref. No.	Part No.	Description	No. Used
31	44-0580	Shield - Rear	1
32	33-3208	Rod - Shield	2
33	25-7740	Knob - Spring Arm	1
34	71-0570	Spring Arm Ass'y - L.H.	2
35	66-0561	Screw - Pivot	2
36	11-9509	Wheel & Tire Assembly (Incl. Ref. #37)	4
37	27-6250	Bushing - Wheel	2
38	27-6231	Bolt - Wheel	4
39	40-1940	Washer - Wheel	2
40	66-0580	Arm - Pivot	4
41	52-3620	Nut - Lock	2
42	32144-85	Screw - Hex Hd. Cap	1
43	75-9450	Decal - Deck	1
44	13-4649	Housing Assembly	1
*	51-0201	Discharge Door Assembly (Incl. Ref. #7, 8, 10, & 12-15)	1

*Not Illustrated

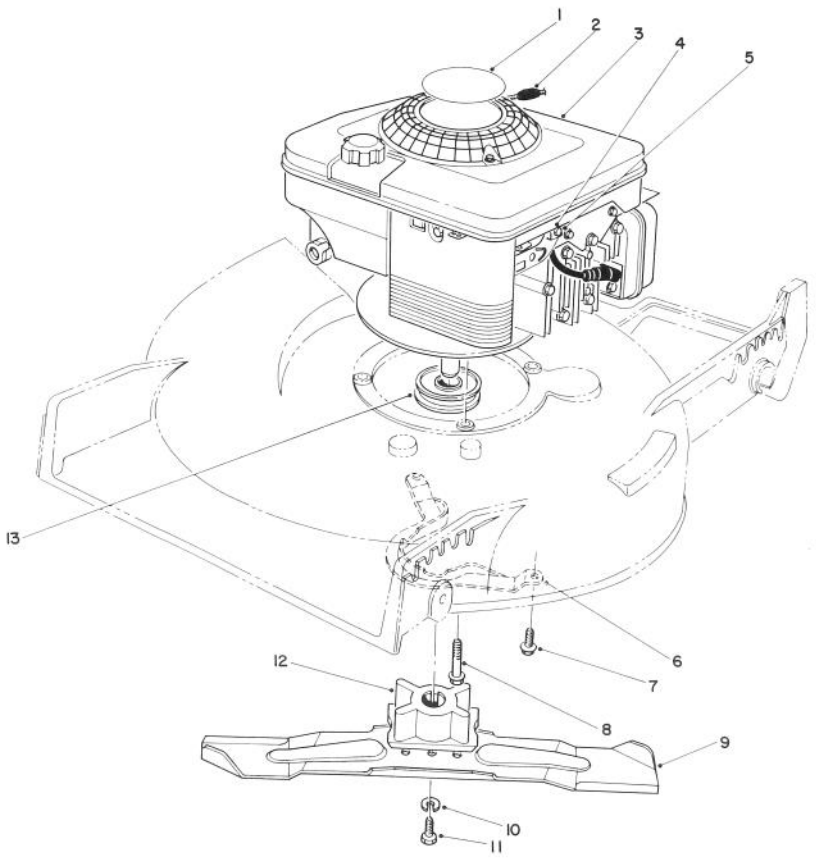

C-0579

ENGINE ASSEMBLY

Ref. No.	Part No.	Description	No. Used
1	71-8460	Decal - Engine	1
†2	2210-316	Stop - Rope	1
3		Engine	1
†4	2210-249	Clamp - Casing	1
†5	2210-313	Screw - Clamp	1
6	40-5720	Guide - Belt	1
7	49-2040	Screw - Thread Forming	2

Ref. No.	Part No.	Description	No. Used
8	32144-102	Screw - Thread Forming	3
9	42-1000	Blade - 21"	1
10	3253-22	Lockwasher	1
11	26-0670	Screw - Blade	1
12	62-7540	Retainer - Blade	1
13	62-7550	Pulley - Driver	1

†Provided with Engine

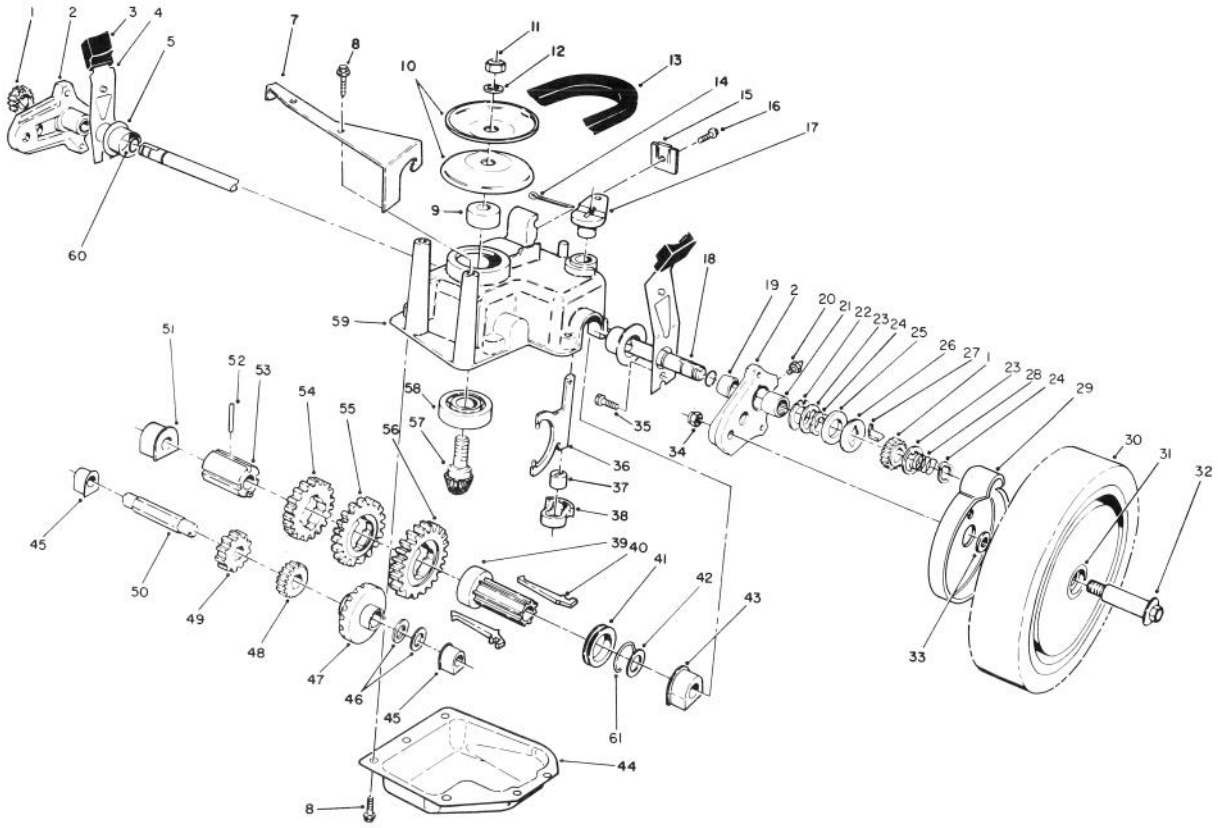

C-0521

GEAR CASE ASSEMBLY

Ref. No.	Part No.	Description	No. Used
1	65-4750	Pinion	2
2	63-8701	Pivot Arm Assembly (Incl. Ref # 19, 20, & 21)	2
3	25-7740	Knob - Arm	2
4	63-8720	Spring Arm Assembly	2
5	42-3520	End Cap	2
7	62-4320	Bracket - Belt Guide	1
8	49-2040	Screw - Self Tapping	8
9	62-6660	Spacer	1
10	60-8840	Pulley - Half	2
11	3296-5	Locknut	1
12	3256-24	Washer - Flat	1
13	62-3900	V-Belt	1
14	3272-10	Pin - Cotter	1
15	46-5610	Cable Clamp	1
16	32144-70	Screw - Thread Forming	1
17	60-8820	Lever - Shift	1
18	65-4770	Shaft - Output	1
19	70-9760	Bushing	2
20	302-56	Fitting - Grease	2
21	48-2060	Needle Bearing	2
22	65-4730	Thrust Washer	2
23	65-4740	Thrust Washer	4
24	65-2720	Ring - Retaining	4
25	65-4710	Ring - Friction	2

Ref. No.	Part No.	Description	No. Used
26	65-4760	Washer - Clutch	2
27	66-6050	Key - Rocker L.H.	1
*	66-6040	Key - Rocker R.H.	1
28	65-4720	Spring	2
29	74-1660	Cover - Wheel	2
30	11-9519	Wheel - Tire & Gear Ass'y (Incl. Ref. # 31)	2
31	27-6250	Bushing - Wheel	4
32	27-6231	Wheel Bolt	2
33	74-1671	Spacer - Wheel Cover	2
34	52-3620	Locknut	2
35	32144-85	Screw	2
36	60-8870	Yoke - Shift	1
37	29-9570	Bushing - Yoke	1
38	60-8810	Retainer - Shift Fork	1
39	76-0780	Sleeve - Shift Key	1
40	76-0760	Key - Shift	2
41	76-0770	Collar - Shift	1
42	36-4780	Washer - Thrust	1
43	60-8770	Bushing - Output Shaft	1
44	60-8730	Cover - Gear Case	1
45	60-8750	Bushing - Int. Shaft	2
46	36-4791	Washer - Thrust	2
47	55-3760	Gear - Pinion 15 Tooth	1
48	55-3780	Gear - Pinion 20 Tooth	1

*Not Illustrated

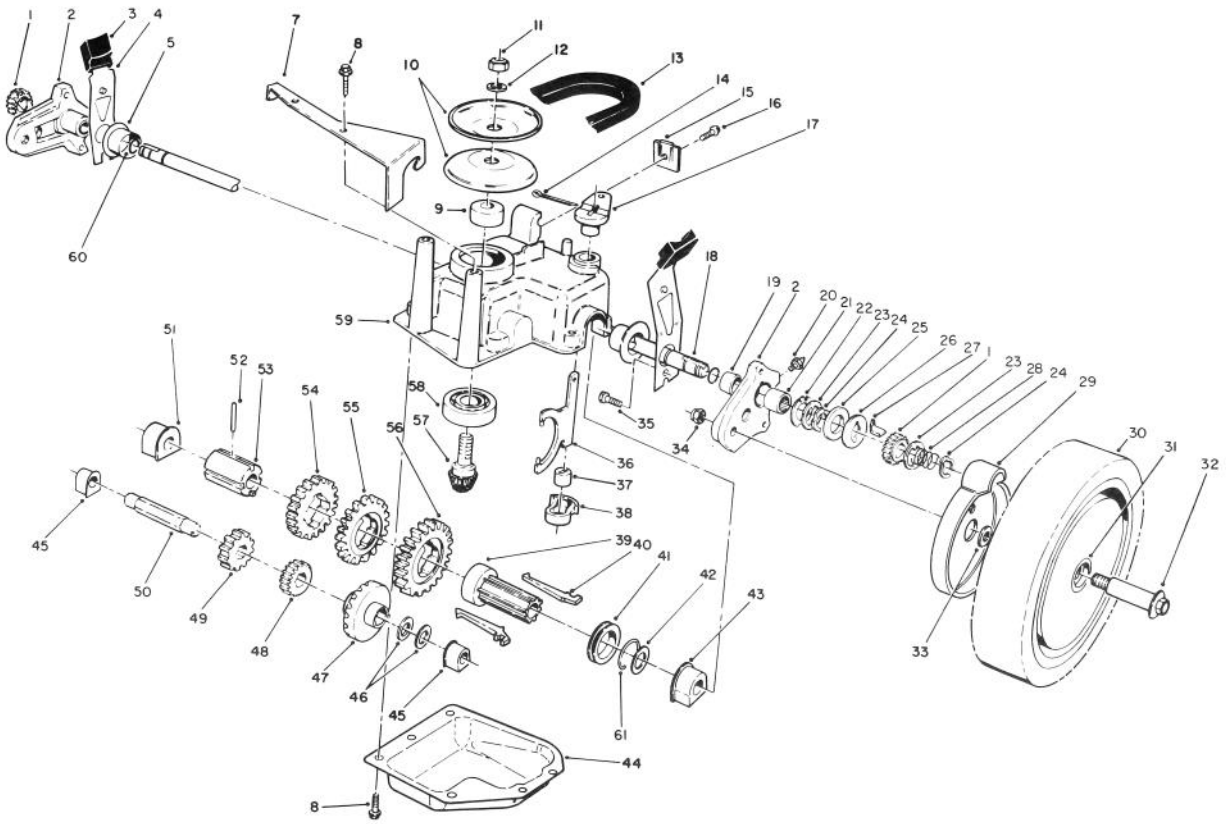

C-0521

GEAR CASE ASSEMBLY (CONTINUED)

Ref. No.	Part No.	Description	No. Used
49	55-3800	Gear - Pinion	1
50	60-8800	Shaft - Intermediate	1
51	60-8850	Bushing - Output Shaft	1
52	32121-120	Pin - Coil	1
53	60-8790	Sleeve - Gear	1
54	55-3810	Gear - 39 Tooth 3rd Gear	1
55	55-3790	Gear - 44 Tooth 2nd Gear	1

Ref. No.	Part No.	Description	No. Used
56	55-3770	Gear - 49 Tooth 1st Gear	1
57	60-8890	Pinion - Bevel	1
58	38-7820	Bearing - Ball	1
59	60-8710	Gear Case - Upper	1
60	237-153	O-Ring	2
61	65-5250	Clip - Spring	1
*	62-6673	Gear Case Assembly	1

*Not Illustrated

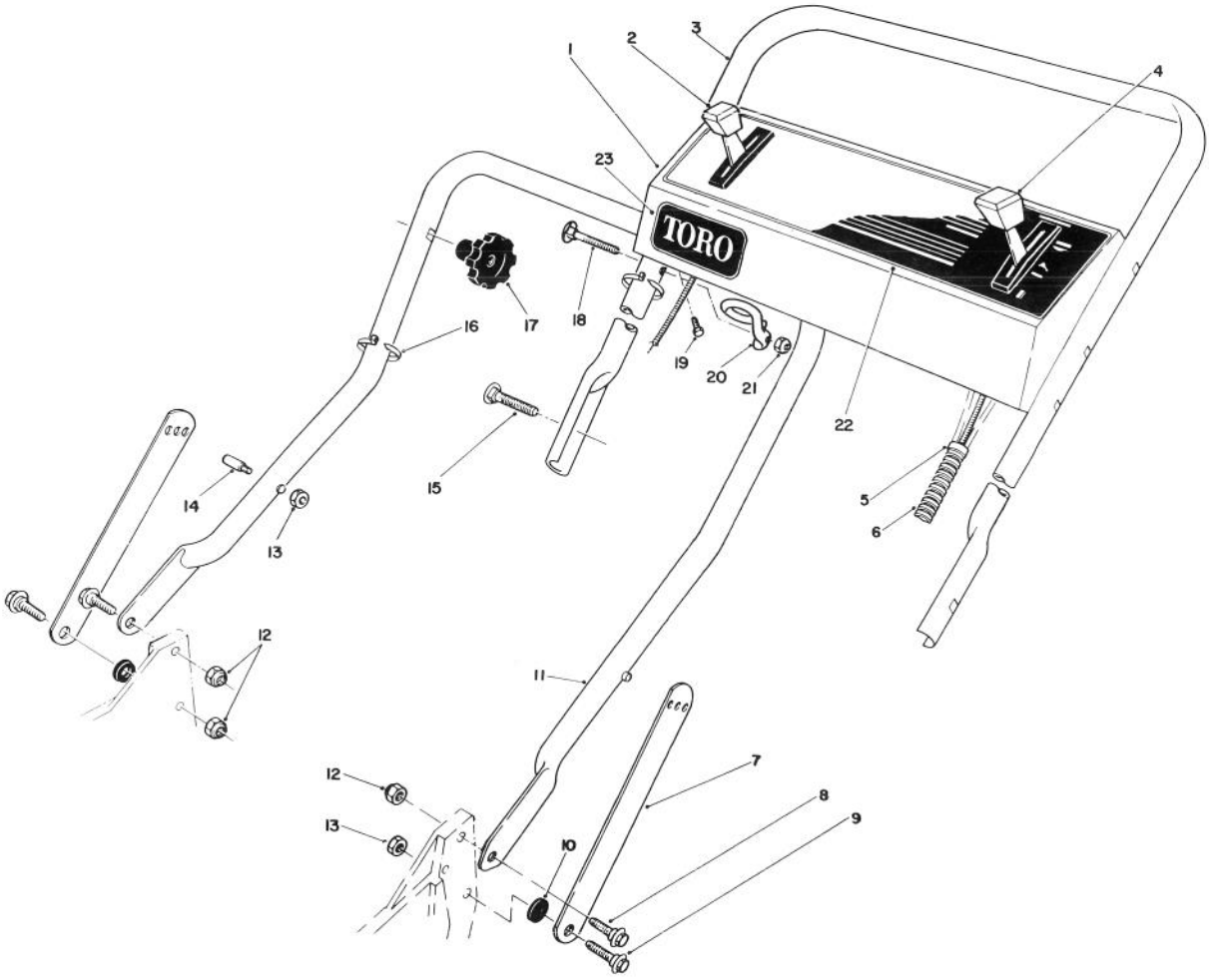

C-0580

HANDLE ASSEMBLY

Ref. No.	Part No.	Description	No. Used
1	14-0719	Panel - Control (Incl. Ref. #22)	1
2	76-2720	Control - Ground Speed (Bend Type #1) (Sheath Lg. 42-1/4") (Wire Lg. 2-1/4")	1
3	49-4234	Handle - Upper	1
4	49-4197	Control - Throttle (Bend Type #6) (Sheath Lg. 55-1/2") (Wire Lg. 2-3/8")	1
5	2412-50	Clip - Convoluted Tubing	4
6	46-6440	Cover - Control Cables	1
7	43-1370	Latch - Handle	2
8	27-7211	Screw - Shoulder	2
9	27-7210	Screw - Shoulder	2
10	3-3287	Spacer	2
11	43-1361	Lower Handle Assembly	1
12	3296-29	Locknut	3
13	3296-47	Locknut	3
†14	49-2750	Pin - Handle	2
†15	17-9421	Screw - Handle	2
16	3290-378	Tie - Cable	2
17	19-4050	Knob - Handle Release	2
18	46-6433	Screw - Handle	1
19	32104-76	Screw - Self Tap Slotted	5
20	46-8080	Guide - Rope	1
21	3296-42	Locknut	1
22	75-9800	Decal - Instructions	1
23	71-0600	Decal - Toro	1

†Service Replacement Parts

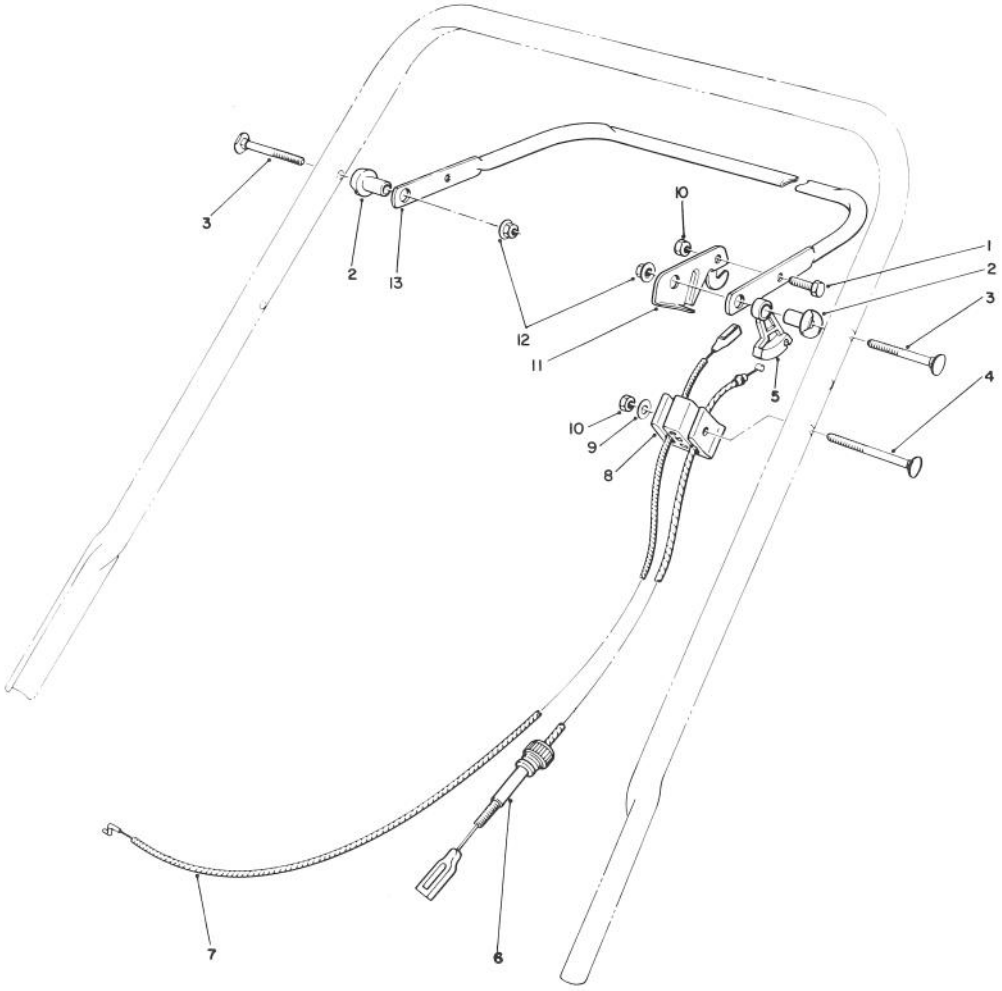

C–0330–90

TRACTION CONTROL ASSEMBLY

Ref. No.	Part No.	Description	No. Used
1	321–3	Capscrew – Hex Hd.	1
2	49–1630	Support – Spacer	2
3	17–9421	Screw – Handle	2
4	46–6434	Screw – Handle	1
5	46–5520	Lever – Traction	1
6	46–5481	Cable – Traction	1
7	76–4330	Cable – Brake	1

Ref. No.	Part No.	Description	No. Used
8	46–6980	Support – Cable	1
9	3256–22	Washer – Flat	1
10	3296–42	Locknut	2
11	66–5350	Lever – Control	1
12	3296–58	Locknut	2
13	71–3080	Bar – Control	1

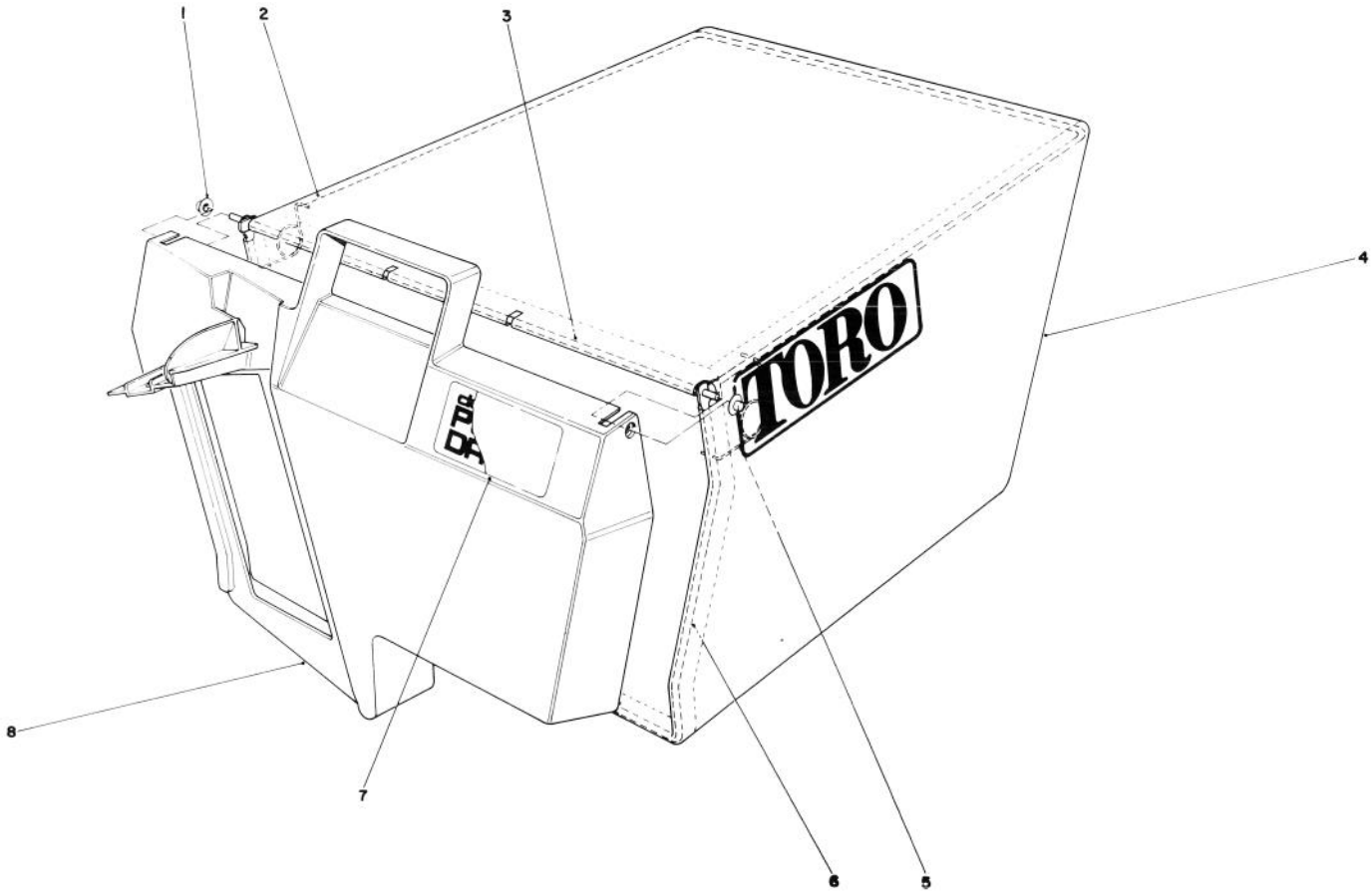

C-0331-90

GRASS BAG ASSEMBLY NO. 11-0189

Ref. No.	Part No.	Description	No. Used
1	3290-422	Nut - Push	2
2	42-4030	Bag Frame - Upper	1
3	33-4820	Hinge - Bag Door	1
4	8-2759	Bag - Grass	1

Ref. No.	Part No.	Description	No. Used
5	36-6910	Spring	2
6	42-4020	Frame - Bag	1
7	66-2150	Decal - Bag Door	1
8	37-1393	Door - Grass Bag	1

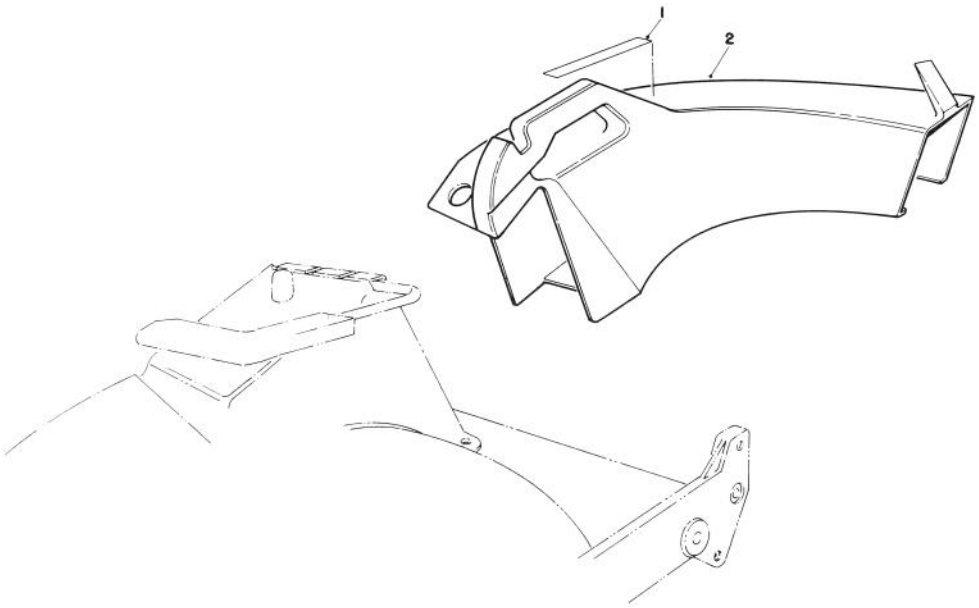

T-0716-90

SIDE DISCHARGE CHUTE MODEL NO 59168 (OPTIONAL)

Ref. No.	Part No.	Description	No. Used
1	76-4780	Decal - Caution	1
2	13-2239	Chute - Discharge (Incl. Ref. #1)	1

Ref. No.	Part No.	Description	No. Used

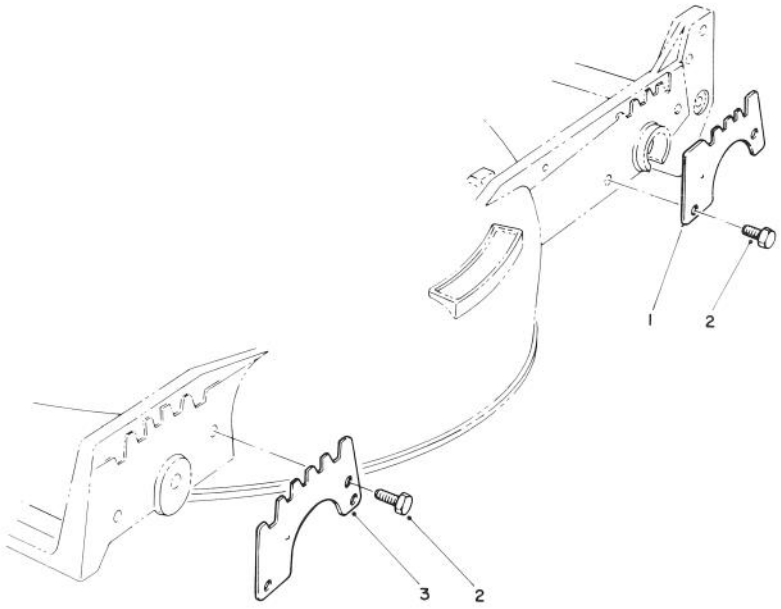

C-0332-90

WEAR PLATE MODEL NO. 49-4080 (OPTIONAL)

Ref. No.	Part No.	Description	No. Used
1	49-4070	Plate - Rear Wear	2
2	32104-17	Thread Forming Screw	8

Ref. No.	Part No.	Description	No. Used
3	43-5050	Plate - Wear Front	2

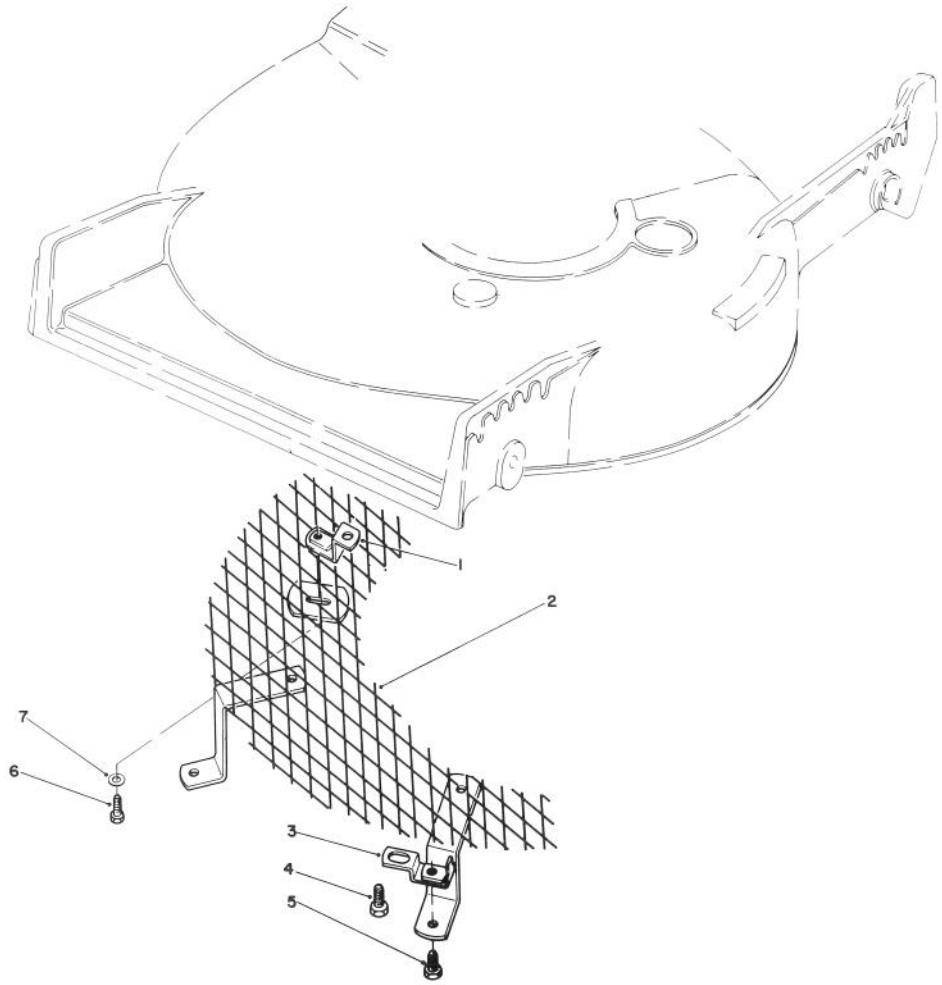

C-0302

LEAF SHREDDER KIT MODEL NO. 59157

Ref. No.	Part No.	Description	No. Used
1	47-6260	Bracket	1
2	47-6230	Screen	1
3	46-4880	Bracket - Mounting	2
4	32144-11	Screw - Self Tapping	3

Ref. No.	Part No.	Description	No. Used
5	321-3	Capscrew - Hex Hd.	2
6	321-5	Capscrew - Hex Hd.	1
7	3256-1	Washer	1

ENGINE BRIGGS & STRATTON MODEL 124702-3115-01

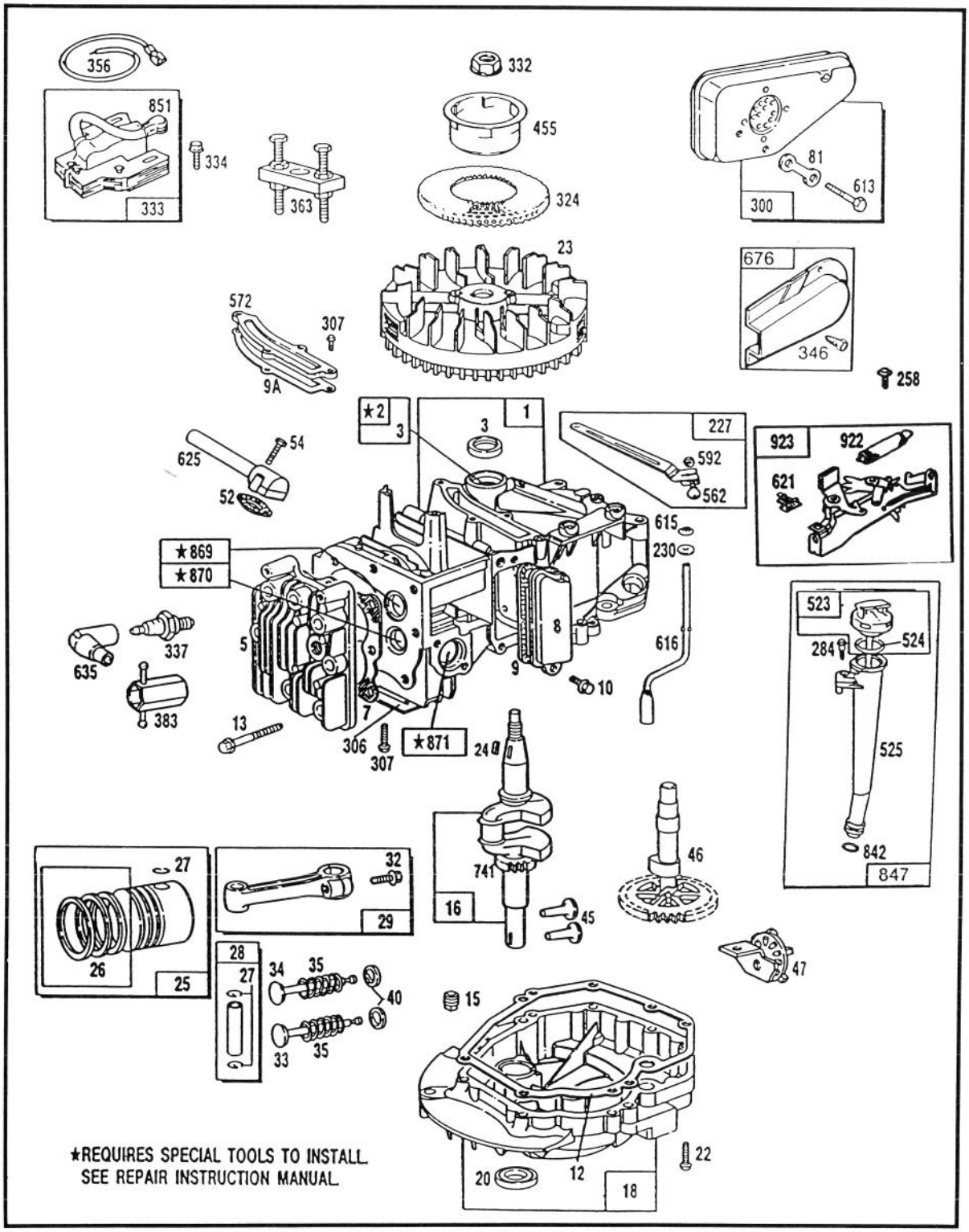

Assemblies include all parts shown in frames.

ENGINE BRIGGS & STRATTON MODEL NO. 124702-3115-01

Ref. No.	Part No.	Description	No. Used
1	493260	Cylinder Assembly	1
2	293708	Bushing – Cylinder Note: Requires special tools for installation.	1
3	**393862	Seal – Oil	1
5	213610	Head – Cylinder	1
7	**272200	Gasket – Head Cylinder	1
8	399717	Breather – Valve Chamber	1
9	**271904	Gasket – Valve Cover	1
9A	**272238	Gasket – Baffle Plate	1
10	94222	Screw – Breather Mounting Sem	1
12	**272198	Gasket – Crankcase	1
13	94547	Screw – Cylinder Hd.	1
15	94239	Plug – Oil Drain	1
16	493731	Crankshaft Note: Order 94388 for Timing Gear Key.	1
18	493279	Sump – Engine	1
20	**399781	Seal – Oil	1
22	94220	Screw – Sump Mtg. Sem	1
23	492177	Flywheel – Magneto	1
24	222698	Key – Flywheel	1
25	493262	Piston Ass'y – Standard	1
	493385	Piston Ass'y – .010" O.S.	1
	493386	Piston Ass'y – .020" O.S.	1
	493387	Piston Ass'y – .030" O.S. Ring Sets: Note: For Chrome Piston Ring Set – Standard Size Order Part No. 493391	1
26	493261	Ring Set – Std. Piston	1
	493388	Ring Set – .010" O.S. Piston	1
	493389	Ring Set – .020" O.S. Piston	1
	493390	Ring Set – .030" O.S. Piston	1
27	26026	Lock – Piston Pin	1
28	298909	Pin Ass'y – Piston – Std.	1
	298908	Pin Ass'y – Piston – .005" O.S.	1
29	490566	Rod Ass'y – Connecting Note: For Connecting Rod with .020" undersize Crankpin Bearing – Order No. 490743.	1
32	94405	Screw Connecting Rod	1
33	262651	Valve – Exhaust	1
34	262652	Valve – Intake	1
35	262224	Spring – Valve	1
40	93312	Retainer – Valve Spring Used with valves with groove in stem.	1
45	262204	Tappet – Valve	1
46	492830	Gear – Cam	1
47	492524	Oil Slinger Gear & Bracket	1
52	**272199	Gasket – Intake Elbow	1
54	94526	Screw – Intake Elbow Mtg.	1
81	233664	Lock – Muffler Screw	1
227	492349	Lever Ass'y – Governor	1
230	67072	Washer – Governor Crank	1
258	94512	Screw – Hex Hd.	1
284	94511	Screw – Hex Hd.	1
300	490547	Muffler – Exhaust	1
306	224324	Shield – Cylinder	1
307	94515	Screw – Hex Hd.	1
324	224251	Screen – Rotating	1
332	92284	Nut – Flywheel	1
333	802574	Armature – Magneto	1
334	93381	Screw – Armature Mtg. Sem	1
337	293918	Plug – Spark (With Gasket) (1-1/2" High – 37-42mm) (Resistor Type)	1
346	93705	Screw – Hex Hd.	1
356	398808	Wire – Ground	1
363	19069	Puller – Flywheel (Optional Accessory)	1
383	89838	Wrench – Spark Plug	1
455	224250	Cup – Starter	1
523	493460	Cap with Dipstick – Oil Filter	1
524	280393	Seal – Filler Tube	1
525	281019	Tube – Oil Filter	1
562	92613	Bolt – Governor Lever	1
572	224328	Baffle – Cylinder	1
592	231082	Nut – Hex	1
613	94231	Screw – Muffler Mtg.	1
615	94474	Pushnut (Governor Crank)	1
616	262578	Crank – Governor	1
621	396847	Switch – Stop	1
625	492717	Tube – Fuel Intake	1
635	66538	Elbow – Spark Plug	1
676	493871	Deflector – Muffler	1
741	262598	Gear – Timing	1
842	280966	Seal – O-Ring	1
847	493459	Tube Ass'y – Oil Fill	1
851	492916	Terminal – Ignition Cable	1
869	213512	Seat – Intake Valve (Std.)	1
870	213513	Seat – Exhaust Valve (Std.)	1
871	262001	Guide – Exhaust Valve Note: 63709 Guide – Intake Valve. See Repair Instruction Manual.	1
922	262640	Spring – Brake	1
923	492918	Brake Assembly	1

**Included in Carburetor Gasket Set – Part No. 490937

ENGINE BRIGGS & STRATTON MODEL 124702-3115-01

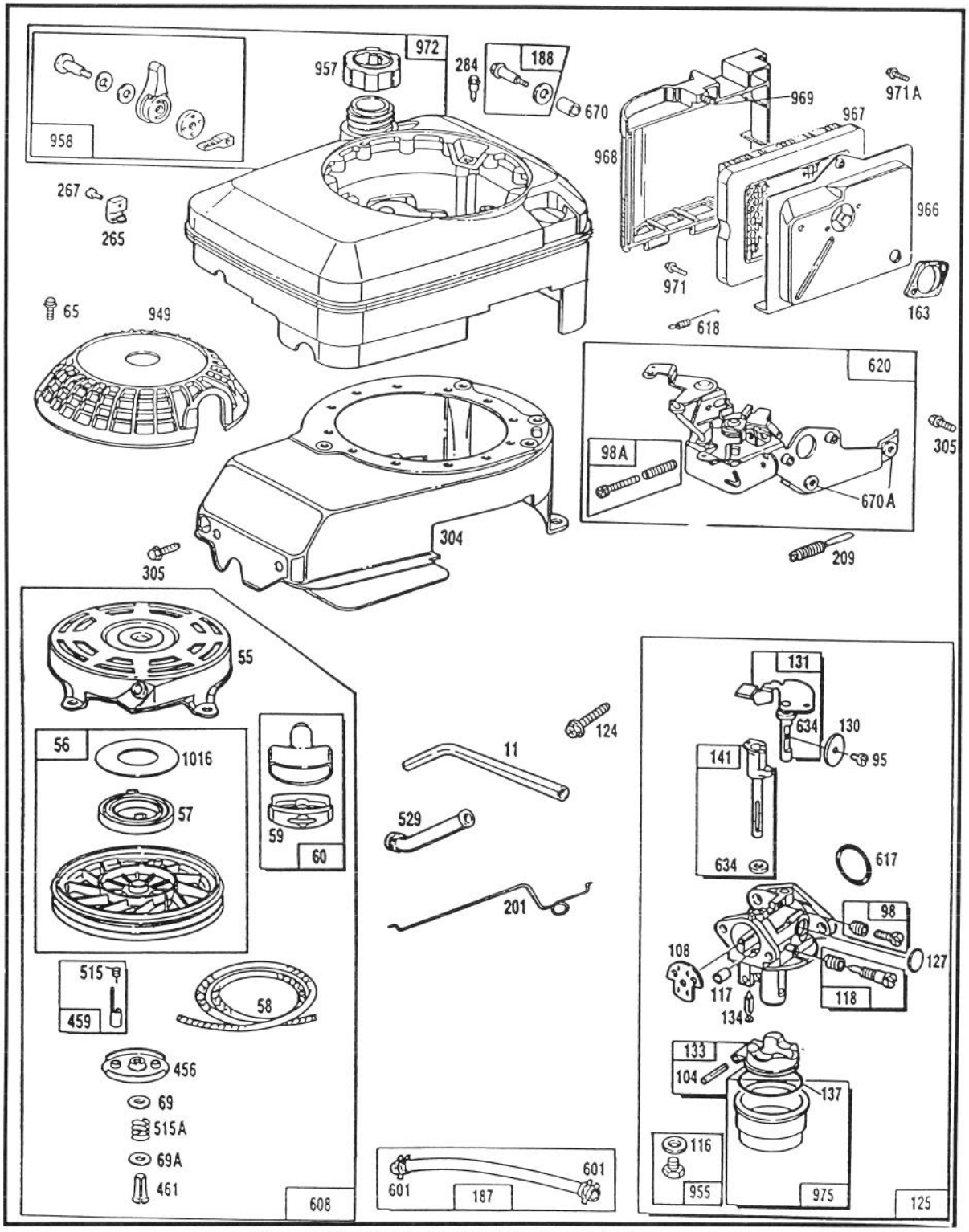

Assemblies include all parts shown in frames.

ENGINE BRIGGS & STRATTON MODEL NO. 124702–3115–01

Ref. No.	Part No.	Description	No. Used
11	231685	Tube – Breather	1
55	492831	Housing – Rewind Starter	1
56	492832	Pulley – Rewind Starter	1
57	262594	Spring – Rewind Starter	1
58	280399	Rope – Rewind Starter (Cut to 88 5/8")	1
59	396892	Insert – Handle	1
60	393152	Handle – Rewind Starter	1
65	94058	Screw – Guard Mounting	1
69	280973	Washer – Rewind Starter	1
69A	224322	Washer – Rewind Starter	1
95	94098	Screw – Throttle Valve Mtg. Sem	1
98	398185	Screw – Idle Adjustment	1
98A	493280	Screw Ass'y – Speed Adj.	1
104	231371	Pin – Float Hinge	1
108	223471	Valve – Choke	1
116	*†	Gasket – Sealing (Sold in Kit Only)	1
117	*	Jet (Sold in Kit Only)	1
118	493765	Valve & Spring – Needle	1
124	94525	Screw – Carburetor Mtg.	1
125	493868	Carburetor Assembly	1
127	*	Plug – Welch (Sold in Kit Only)	1
130	223470	Valve – Throttle	1
131	493267	Shaft & Lever – Throttle	1
133	398187	Float Ass'y – Carburetor	1
134	398188	Valve – Inlet (Incl. Seat)	1
137	*†	Gasket – Bowl (Sold in Kit Only)	1
141	493266	Shaft – Choke	1
163	272257	Gasket – Air Cleaner	1
187	492790	Hose – Fuel (Cut to Suit)	1
188	398540	Screw – Tank Mounting (Includes Washer)	1
201	262579	Link – Governor	1
209	262661	Spring – Governor	1
265	221535	Clamp – Casing	1
267	94204	Screw – Clamp Mtg.	1
284	94511	Screw – Hex Hd.	1
304	493294	Housing – Blower	1
305	94513	Screw – Hex Hd. Sem	1
456	224321	Retainer – Rewind Starter	1
459	492833	Pawl – Starter	1
461	262626	Pin – Starter	1
515	262556	Spring – Pawl	1
515A	262625	Spring – Torsion	1
529	280943	Grommet – Breather	1
601	93053	Clamp – Hose (Green) Note: 93807 Clamp – Hose (Black)	1
608	493295	Starter Ass'y – Rewind	1
617	*†270344	Seal – Fuel Intake Tube	1
618	260870	Spring – Choke Return	1
620	492978	Bracket Assembly – Carburetor Control	1
621	396847	Switch – Stop	1
634	*†	Washer – Throttle Shaft (Sold in Kit Only)	1
670	280512	Spacer – Fuel Tank	1
670A	493823	Spacer – Carb. Brkt.	2
949	280946	Guard – Finger	1
955	493869	Screw – Bowl Mtg.	1
957	397974	Cap Assembly – Fuel	1
958	493277	Valve – Fuel Shut-Off	1
966	492363	Base – Air Cleaner	1
967	491588	Filter – Air	1
968	280937	Cover – Air Cleaner	1
969	94120	Screw – Cover Mtg.	1
971	94269	Screw – Air Cleaner	1
971A	94121	Screw – Backplate to Carb.	1
972	493231	Tank Assembly – Fuel	1
975	493640	Bowl Ass'y – Carburetor	1
1016	224278	Cover – Rewind Starter	1

*Included in Carburetor Overhaul Kit – Part No. 493762
†Included in Carburetor Gasket Set – Part No. 490937

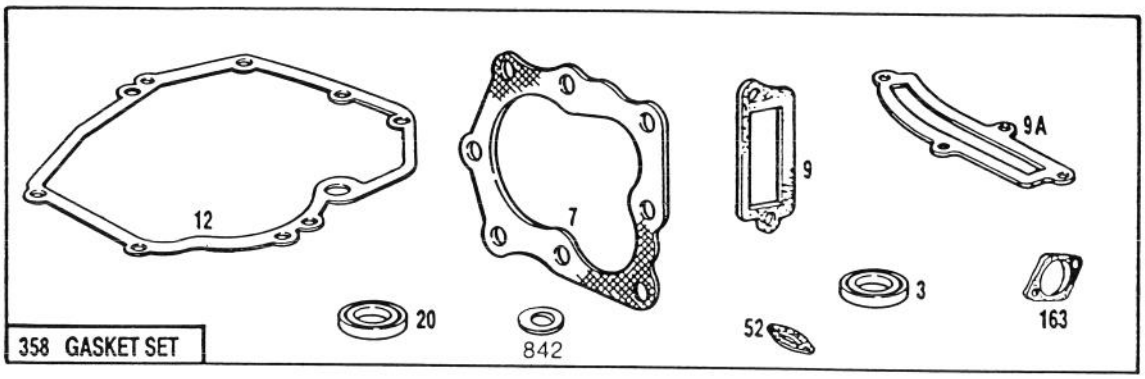

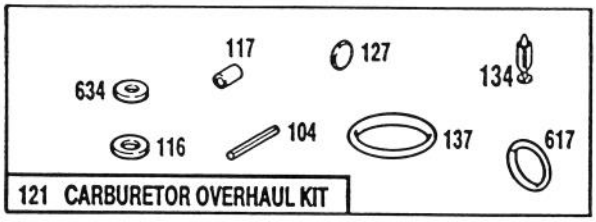

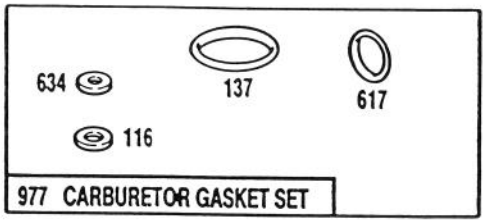

Assemblies include all parts shown in frames.

ENGINE BRIGGS & STRATTION MODEL 124702–3115–01

Ref. No.	Part No.	Description	No. Used
3	393862	Seal – Oil	1
7	272200	Gasket – Cylinder Hd.	1
9	271904	Gasket – Valve Cover	1
9A	272238	Gasket – Baffle Plate	1
12	272198	Gasket – Crankcase	1
20	399781	Seal – Oil	1
52	272199	Gasket – Intake Elbow	1
104	231371	Pin – Float Hinge	1
116		Gasket – Sealing	1
117		Jet	1

Ref. No.	Part No.	Description	No. Used
121	493762	Carburetor Overhaul Kit	1
127		Plug – Welch	1
134	398188	Valve – Inlet	1
137		Gasket – Bowl	1
163	272257	Gasket – Air Cleaner	1
358	493263	Gasket Set	1
617	270344	Seal – Fuel Intake Tube	1
634		Washer – Throttle Shaft	1
842	280966	Seal – O-Ring	1
977	490937	Gasket Set – Carburetor	1