Form No. 3356-263 Rev A

Transmission Shield Kit

For 2005 and After Super Recycler Lawn Mowers

Model No. 112-6430

Installation Instructions

1. Disconnect the wire from the spark plug.
2. Tip the mower onto its side, with the air filter up.
3. Remove the 2 screws from the mower as shown in Figure 1.

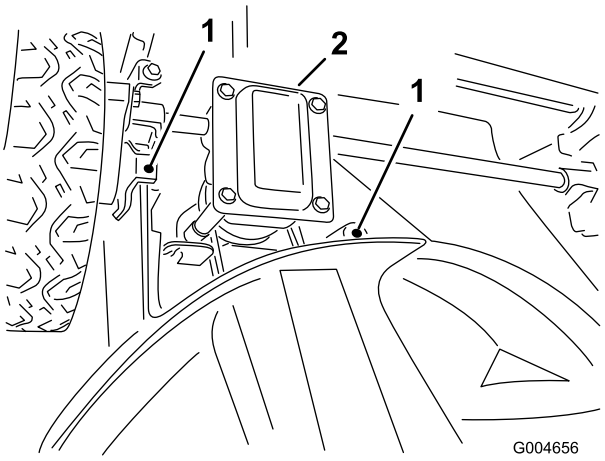

Figure 1

1. Screw location
2. Transmission

Note: Save the 2 screws for installing the transmission shield.

4. Install the transmission shield as shown in Figure 2.

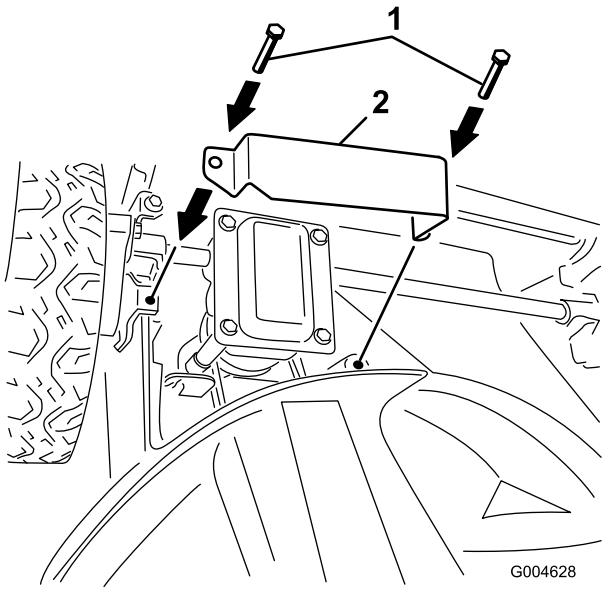

Figure 2

1. Screws (previously removed)
2. Transmission shield

5. Secure the transmission shield to the transmission and housing with the 2 screws that you previously removed.
6. Return the mower to the operating position.

© 2006—The Toro® Company
8111 Lyndale Avenue South
Bloomington, MN 55420

Register at www.Toro.com.

Original Instructions (EN)
Printed in the USA.
All Rights Reserved