FORM NO. 3314–301 Rev. A

TORO®

MODEL NO. 30505–00001 & UP

PARTS CATALOG

15 CU. FT. HOPPER KIT
For Groundsmaster 200 Series

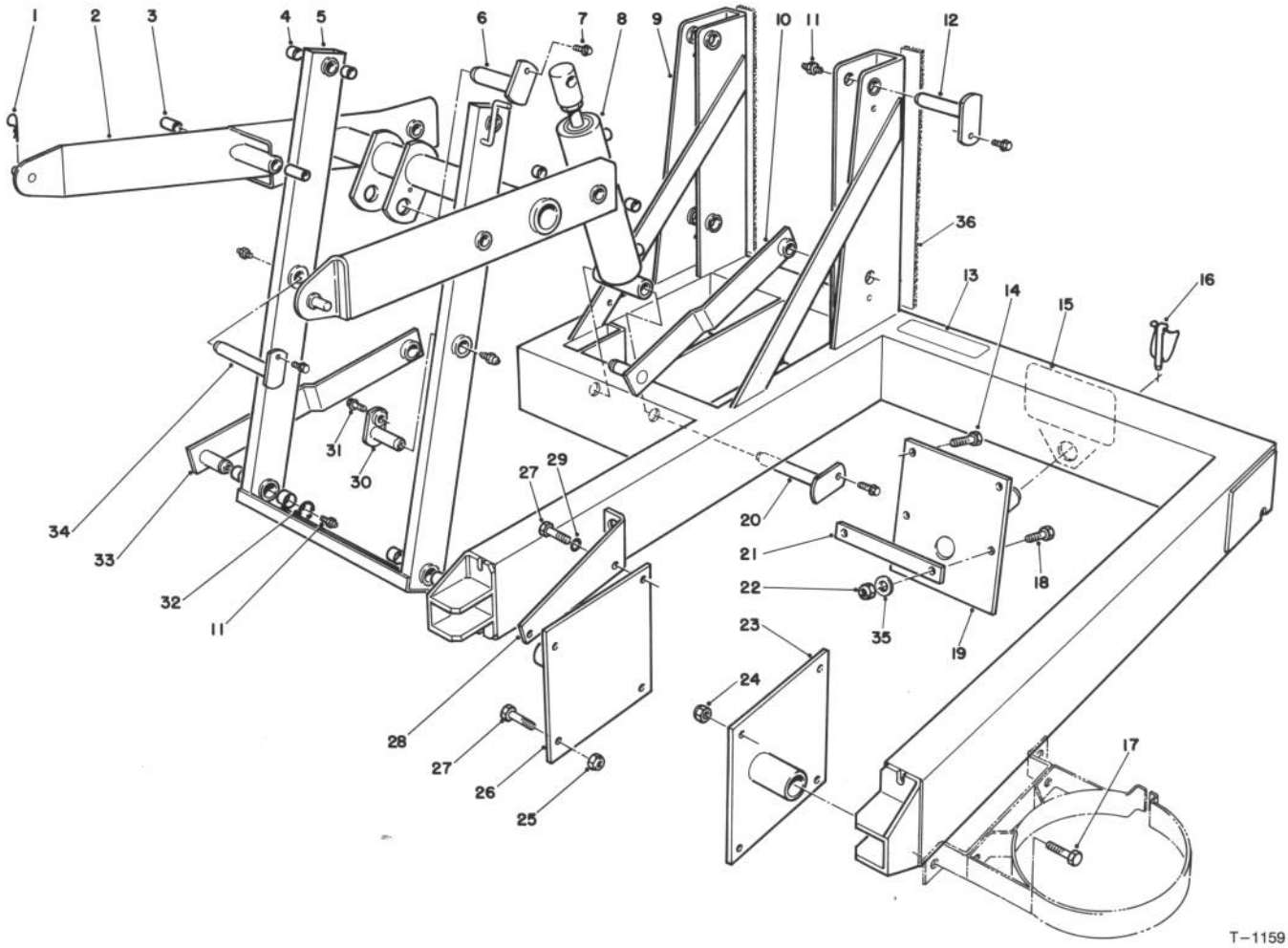

T–1159

FRAME ASSEMBLY

Ref. No.	Part No.	Description	No. Used
1	3290–355	Pin – Cotter Hair	2
2	77–6740	Main Lift Arm Assembly (Incl. Ref. #3 & 4)	1
3	256–77	Bushing – Sleeve	2
4	256–76	Bushing – Sleeve	14
5	77–6750	Arm Assembly (Incl. Ref. #4)	1
6	77–6560	Pin – Cylinder Mount	1
7	49–2040	Screw – Hex. Flange Hd.	6
8	77–5950	Hydraulic Cylinder Assembly	1
9	77–6001	Main Frame Assembly (Incl. Ref. #13, 15 & 36)	1
10	77–6360	Lower Arm Assembly LH (Incl. Ref. #11)	1
11	302–5	Fitting – Grease	8
12	77–6600	Pivot Pin Assembly (Incl. Ref. #11)	4

Ref. No.	Part No.	Description	No. Used
13	80–4650	Decal	1
14	325–5	Screw – Cap Hex. Hd.	2
15	62–5550	Decal – TORO	1
16	3290–384	Pin – Disconnect	1
17	322–6	Screw – Cap Hex. Hd.	4
18	325–6	Screw – Cap Hex. Hd.	2
19	77–6160	Bracket – Rear	1
20	77–6561	Pin – Pivot	1
21	77–6690	Strap	2
22	3296–25	Nut – Lock	4
23	77–6240	Bracket – Side LH	1
24	3296–29	Nut – Lock	4
25	32152–2	Nut – Hex.	2
26	77–6210	Bracket – Side RH	1
27	323–6	Screw – Cap Hex. Hd.	4
28	77–6670	Bracket – Coupler	1
29	3253–5	Washer – Lock	2

TPS

© The TORO Company – 1993

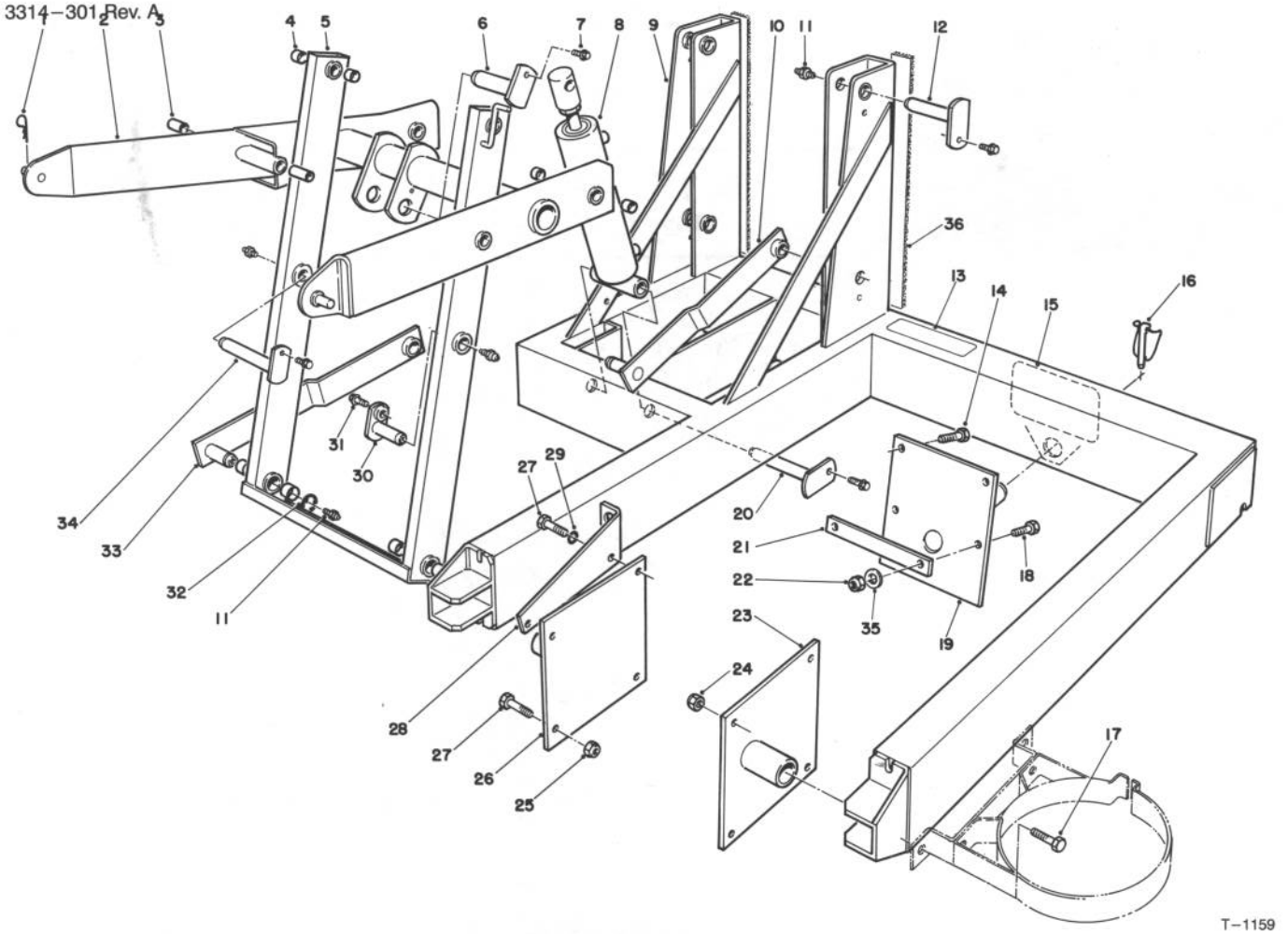

T–1159

FRAME ASSEMBLY (Continued)

Ref. No.	Part No.	Description	No. Used
30	77–6602	Pivot Pin Assembly (Incl. Ref. #11)	1
31	49–2040	Screw – Hex. Washer Hd.	2
32	32151–48	Ring – Retaining	2
33	77–6390	Lower Arm Assembly RH (Incl. Ref. #11)	1

Ref. No.	Part No.	Description	No. Used
34	77–6601	Pivot Pin Assembly (Incl. Ref. #11)	1
35	3256–26	Washer – Flat	2
36	82–5880	Bumper	2
*	80–4660	Decal – Warning	1

*Not Illustrated

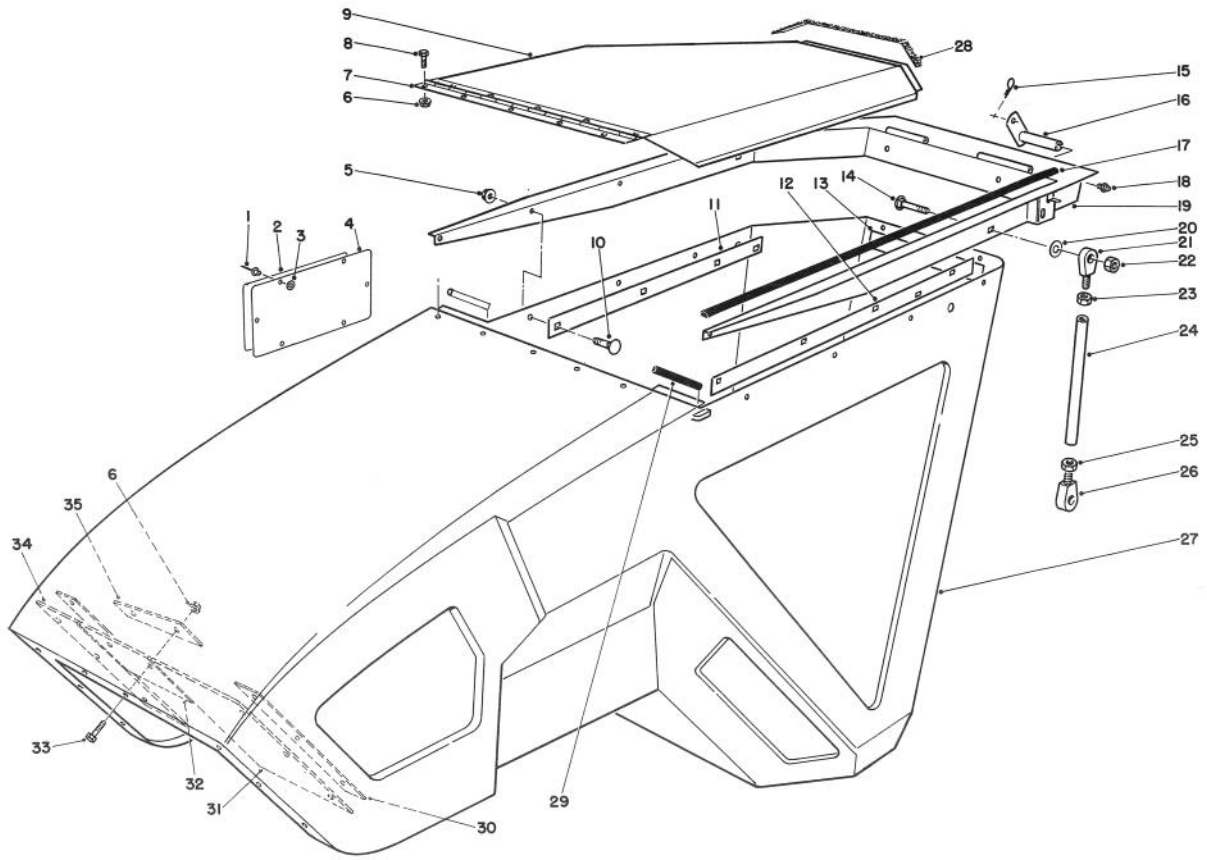

T-1160-90

HOPPER ASSEMBLY

Ref. No.	Part No.	Description	No. Used
1	3290-415	Rivet - Pop	6
2	80-4760	Decal	1
3	3269-10	Washer	6
4	80-4740	Plate	1
5	32128-20	Nut - Flange	9
6	32128-17	Nut - Flange	18
7	77-6770	Hinge	1
8	3290-134	Screw - Cap, Hex. Hd.	10
9	77-6520	Cover - Hopper, Front	1
10	3230-2	Bolt - Carriage	9
11	77-6651	Plate - Backup	1
12	77-6650	Plate - Backup	1
13	77-6660	Plate - Backup	1
14	3233-14	Bolt - Carriage	2
15	3290-467	Pin - Hair, Cotter	2
16	77-6600	Pin (Incl. Ref. #18)	2
17	82-5861	Seal - Left	1
*	82-5860	Seal - Right	1

Ref. No.	Part No.	Description	No. Used
18	302-5	Fitting - Grease	2
19	77-6430	Arm W.A.	1
20	3256-26	Washer - Flat	2
21	2411-48	Rod End	2
22	3296-23	Nut - Lock	2
23	3220-5	Nut - Jam	2
24	77-6490	Rod	2
25	3220-12	Nut - Jam, L.H. Thd.	2
26	2411-49	Rod End - L.H. Thd.	2
27	77-6510	Hopper	1
28	82-5850	Seal - Cover, Rear	1
29	82-5851	Seal - Side	2
30	82-5840	Flat - Long	2
31	82-5820	Shield - Wide	1
32	82-5810	Shield - Top	1
33	3290-126	Screw - Cap, Hex. Hd.	8
34	82-5821	Shield -Narrow	1
35	82-5830	Flat - Short	1

*Not Illustrated

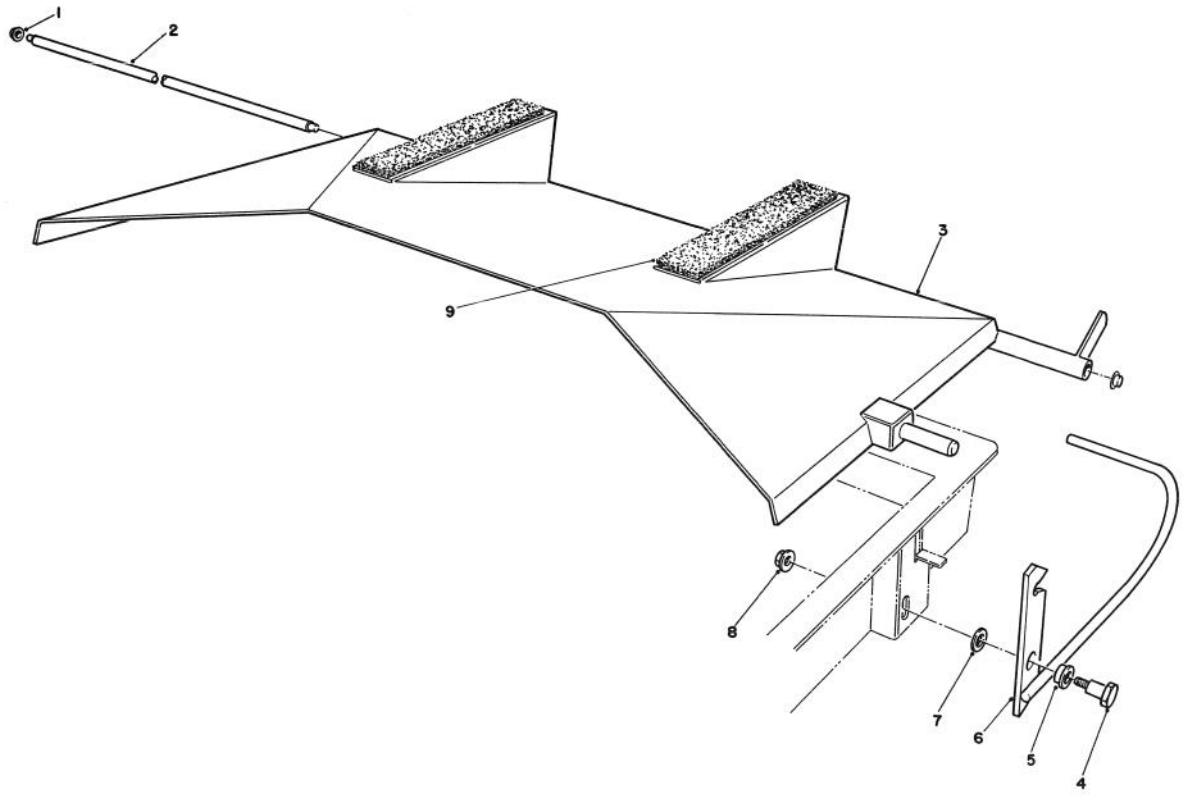

T-1169-90

REAR COVER & LATCH

Ref. No.	Part No.	Description	No. Used
1	32112-1	Retainer - Cap	2
2	77-6540	Pin - Hinge	1
3	77-6530	Cover - Rear	1
4	59-5400	Bolt - Shoulder	1
5	256-316	Bushing	1

Ref. No.	Part No.	Description	No. Used
6	77-6890	Latch (Incl. Ref. #5)	1
7	80-4980	Washer - Flat	1
8	32128-25	Nut - Flange	1
9	82-5870	Foam	2

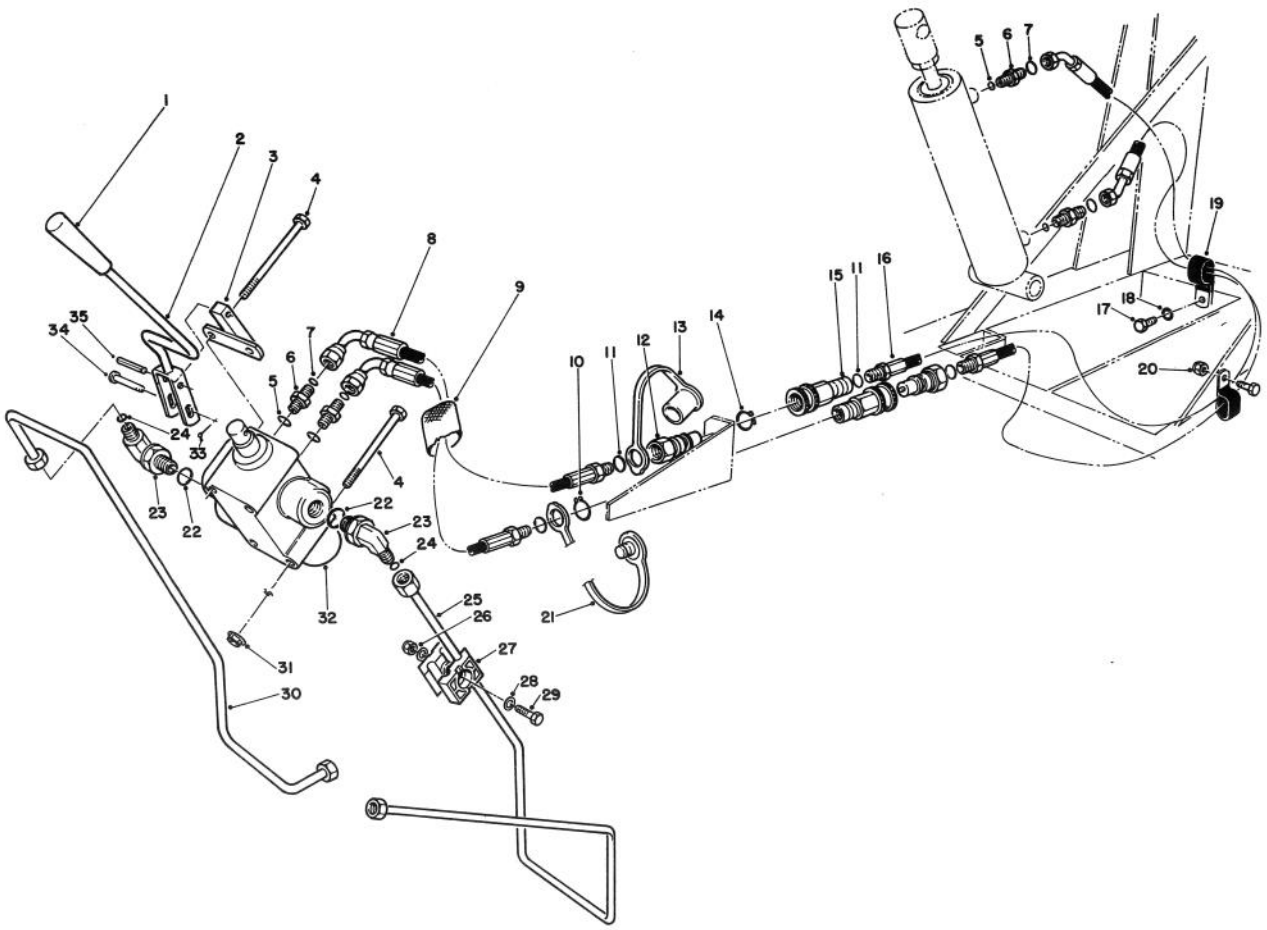

T-1162-90

HYDRAULIC ASSEMBLY

Ref. No.	Part No.	Description	No. Used
1	233-39	Knob - Handle	1
2	80-3490	Handle W.A.	1
3	80-3360	Lever W.A. - Pivot	1
4	321-14	Screw - Cap, Hex. Hd.	3
5	237-78	O-Ring	4
6	340-92	Fitting	4
7	237-21	O-Ring	4
8	77-5960	Hose Assembly	2
9	56-7982	Protector - Sleeve	1
10	32151-83	Ring - Retaining	1
11	237-42	O-Ring	4
12	63-1240	Nipple - Quick Disconnect	2
13	353-985	Plug - Dust	1
14	32151-79	Ring - Retaining	1
15	63-1220	Coupler - Quick Disconnect	2
16	77-5970	Hose Assembly	2
17	322-3	Screw - Cap, Hex. Hd.	2
18	3253-4	Washer - Lock	1

Ref. No.	Part No.	Description	No. Used
19	2412-105	Clamp - Tube, Double	2
20	3296-29	Nut - Lock	1
21	353-984	Plug - Dust	1
22	237-79	O-Ring	2
23	340-99	Fitting	2
24	237-22	O-Ring	2
25	77-5980	Tube Assembly	1
26	3296-8	Nut - Lock	1
27	56-7973	Clamp	2
28	3256-22	Washer - Flat	2
29	321-8	Screw - Cap, Hex. Hd.	1
30	77-5990	Tube Assembly	1
31	32128-33	Nut - Flange Hd.	3
32	43-1950	Valve Assembly	1
33	3272-4	Pin - Cotter	1
34	283-17	Pin - Clevis	1
35	32121-5	Pin - Roll	1
*	80-4640	Decal - Valve Operation	1

*Not Illustrated

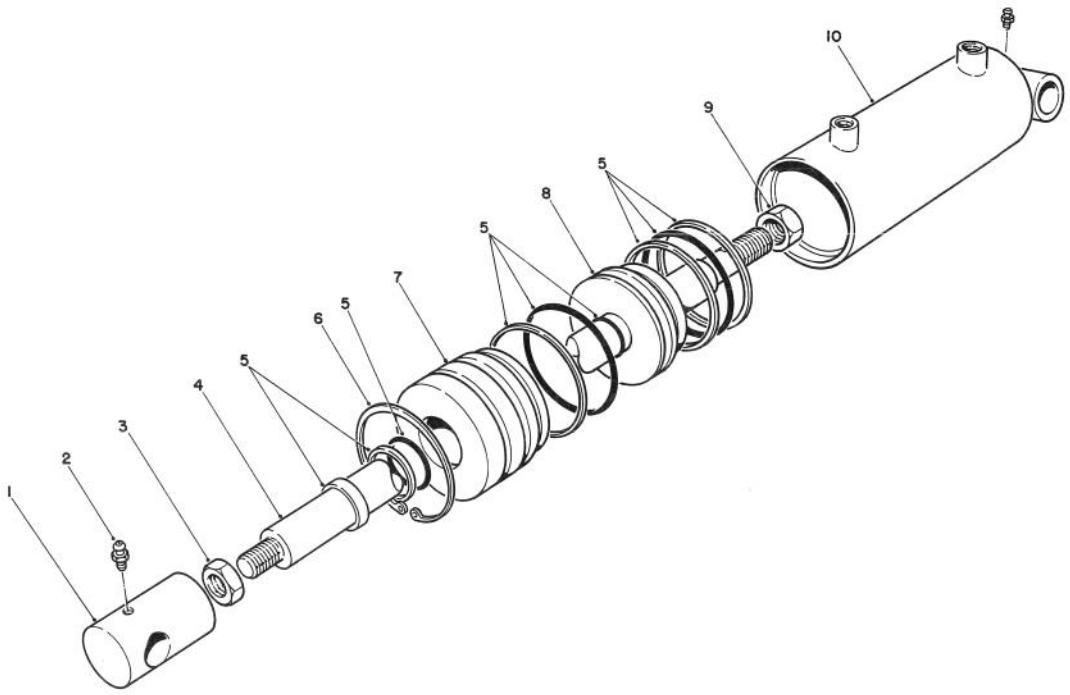

T-1161-90

CYLINDER ASSEMBLY NO. 77-5950

Ref. No.	Part No.	Description	No. Used
1	77-6980	Clevis	1
2	302-55	Fitting - Zerk	2
3	77-6990	Nut	1
4	77-6960	Shaft	1
5	67-5500	Repair Kit	1
6	67-5470	Ring - Retaining	1

Ref. No.	Part No.	Description	No. Used
7	67-5460	Head	1
8	67-5450	Piston	1
9	60-9760	Nut - Hex	1
10	77-6970	Barrel	1

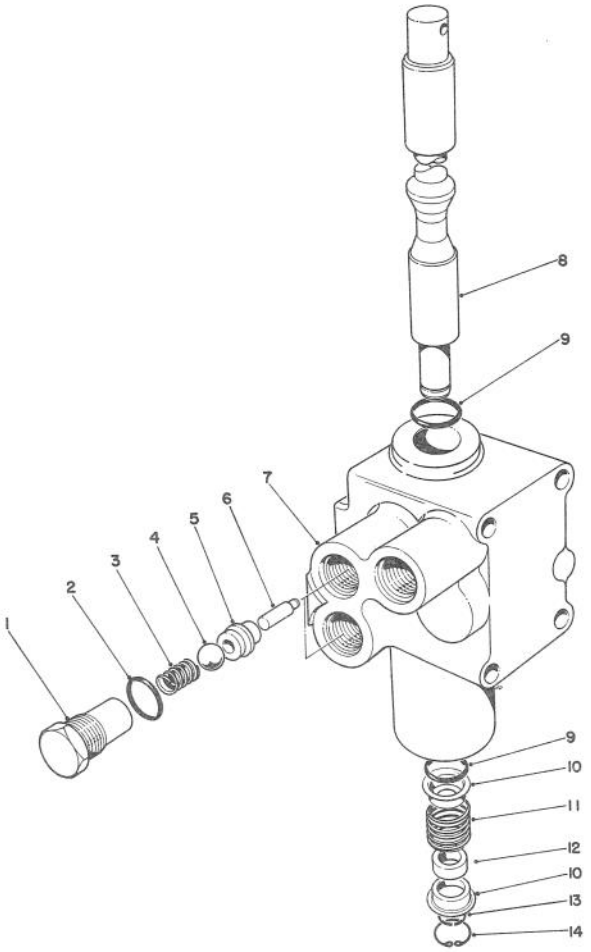

T-0236-90

CONTROL VALVE No. 43-1950

Ref. No.	Part No.	Description	No. Used
1	22-8330	Plug	2
2	237-42	O-Ring	2
3	22-8340	Spring	2
4	22-8350	Ball	2
5	22-8370	Seat - Valve, Check	2
6	22-8360	Pin - Cam	2
7	43-1730	Body	1
8	22-8420	Spool	1

Ref. No.	Part No.	Description	No. Used
9	22-8500	O-Ring	2
10	22-8380	Retainer - Spring	2
11	22-8410	Spring	1
12	23-3030	Spacer	1
13	22-8480	Ring - Retaining, Spool	1
14	22-8490	Ring - Retaining	11

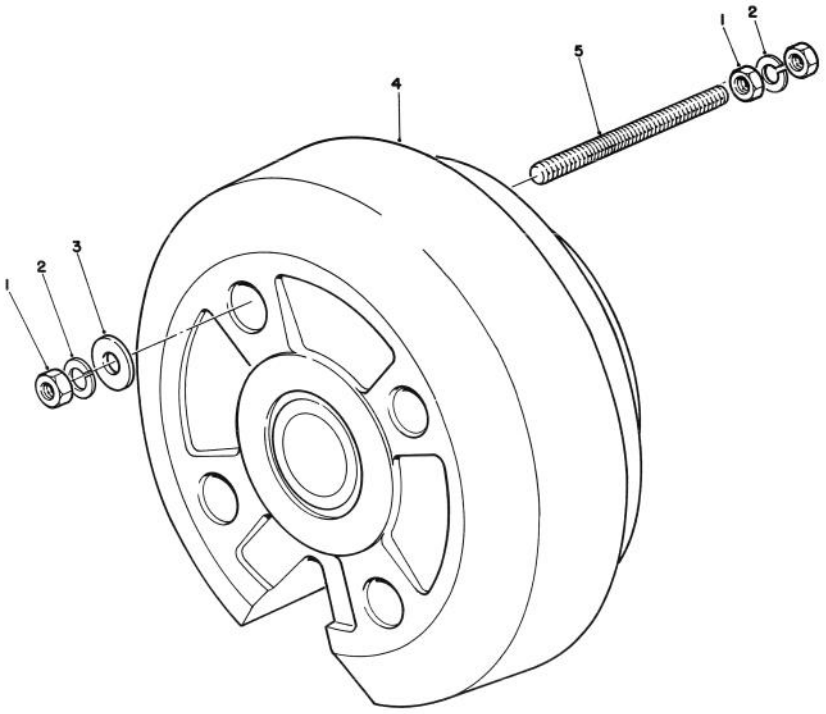

T-1163-90

WHEEL WEIGHT NO. 77-6700

Ref. No.	Part No.	Description	No. Used
1		Nut - Hex	6
2		Washer - Lock	4
3		Washer - Flat	2

Ref. No.	Part No.	Description	No. Used
4	77-6700	Weight - Wheel 75# (Incl. Ref. #1-3 & 5)	1
5		Rod - Threaded	2

AL-914249

Litho in U.S.A.