Form No. 3321–481 Rev D

Tow Behind Trailer

TransPro 100

Model No. 04240–250000001 & Up

Installation Instructions

Assembly

1. Mount tongue assembly to mounting bracket on underside of trailer bed with (2) 3/8–16 x 2–3/4" lg. capscrews, spacers, and lock nuts. For most applications, use front set of mounting holes in tongue and bracket (Fig. 1).

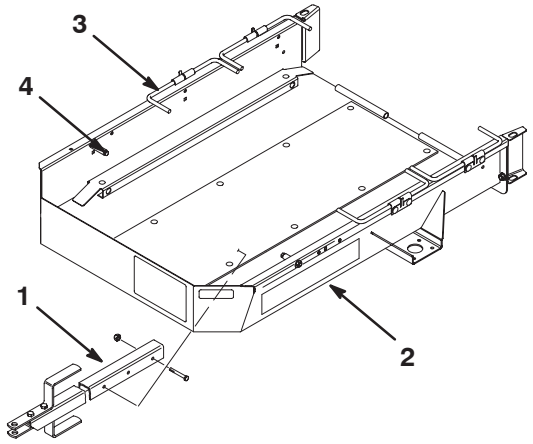

Figure 1

1. Tongue assembly
2. Trailer bed
3. Wheel rod
4. Stop

2. Mount a axle to mounting bracket on each side of trailer bed with (4) carriage bolts and locknuts (Fig. 2).

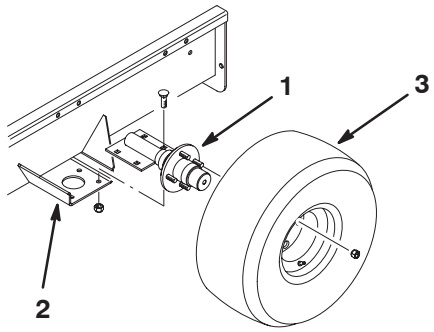

Figure 2

1. Axle
2. Mounting bracket
3. Wheel assembly

3. Mount a wheel assembly to each axle hub with (4) lug nuts (Fig. 2). Tighten nut to 80 ft/lb. Inflate tires to 5 psi.

Note: To prevent premature wear of the tires, the wheels should have 0 to 1/8" toe–in when they are pointed straight ahead. To check toe–in, scribe a line around center of each tire. Measure center to center distance (Fig. 3), at wheel hub height, in front and back of the tires. If toe–in is not within 1/8", adjust axle mounting brackets as required.

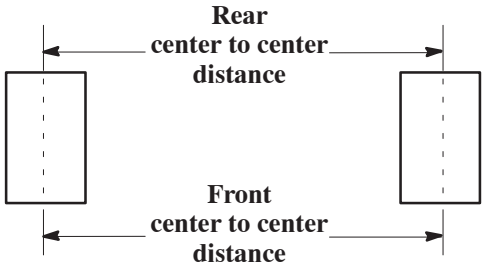

Figure 3

Important Higher tire pressure may cause damage to greens mower.

4. Mount trailer ramp to rear of trailer bed with hinge rod and (2) cotter pins (Fig. 4).

Note: Apply a light coating of grease to hinge rod prior to assembly.

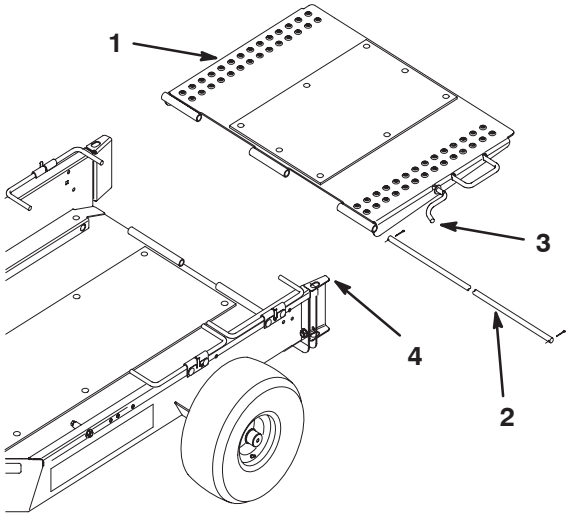

Figure 4

1. Trailer ramp
2. Hinge rod
3. Ramp latch
4. Wheel guide

5. Pivot trailer ramp upward hook ramp latch into hole in top of wheel guide (Fig. 4).

© 1998, 2003 by The Toro Company
8111 Lyndale Avenue South
Bloomington, MN 55420-1196

All Rights Reserved
Printed in the USA

Adjust Trailer Tongue

1. Adjust trailer tongue height until trailer is parallel to ground or until it fits tow vehicle hitch. Move spacers to top or bottom of tongue until desired location is attained (Fig. 5).

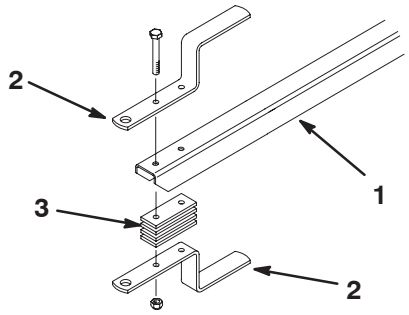

Figure 5

1. Trailer tongue
2. Trailer hitch
3. Hitch spacer

Loading Trailer

1. Unhook ramp latch from wheel guide and lower ramp to ground.
2. Pivot wheel rods upward.
3. Remove baskets from greens mower, disengage reel drive and move throttle to slowest position. SLOWLY drive greens mower onto trailer until trailer stops are contacted (Fig. 1).
4. Stop engine and engage parking brake.
5. Pivot wheel rods downward over greens mower transport wheels (Fig. 1).
6. Repeat procedure if trailering two greens mowers.
7. Pivot trailer ramp upward hook ramp latch into hole in top of wheel guide (Fig. 4).
8. Store baskets in tow vehicle.

Operation

- The TransPro Trailer can be used for Greensmaster 1000 or Flex 21 Walk Greens Mowers. It can also be used with the Greensmaster 800 or Flex 18 Walk Greens Mowers if a conversion kit is obtained and installed. A Greensmaster 1600 will fit if the transport axles are removed from the mower and the rails are removed from th etrailer bed The towing of other products may result in damage to axles and transmissions that continue to rotate when towed.
- **USE ONLY A VEHICLE WITH THE PROPER TOW RATING.** The TransPro Trailer and two Greens Mowers weigh approximately 800 lbs. Ensure that the tow vehicle has adequate braking and handling capacity by checking the recommendations of the vehicle manufacturer.
- Ensure that the trailer is properly connected to the tow vehicle before loading or unloading the greens mowers to prevent sudden unintended tongue movement or flip up.
- The TransPro Trailer adds extra towing weight to the vehicle. Drive the vehicle safely.
  - Do not drive on highway or public roads.
  - Always SLOW the tow vehicle when approaching and while making a turn.
  - Always SLOW the tow vehicle when driving in unfamiliar areas or over rough terrain.
  - Always SLOW the tow vehicle when changing direction of travel or preparing to stop.
  - When turning or driving on slopes, always SLOW the tow vehicle, then turn to prevent loss of control and possible upset.
  - DO NOT make sudden or sharp turns. DO NOT suddenly change direction of travel on an incline, ramp, grade, slope or similar surface.
  - Always adjust the tow vehicle speed to allow for existing ground conditions such as wet slick surfaces, loose sand or gravel and/or low visibility conditions such as dim or bright lighting, fog, mist or rain.
  - Be especially careful when driving a heavily loaded vehicle down an incline or slope. Drive the vehicle UP and DOWN the face of the slopes, inclines or grades whenever possible. DO NOT DRIVE across the face if at all possible. There is a risk of upsetting the vehicle, which can result in serious injury or death.
- Before backing up, look to the rear and assure no one is behind. Back up slowly and watch the trailer movement closely.
- Use extreme caution and slow speed when backing up the trailer and tow vehicle.
- Watch out for traffic when near or crossing roads. Always yield the right of way to pedestrians and other vehicles.
- If the trailer begins to vibrate abnormally, stop immediately. Shut off the tow vehicle engine. Repair all damage before commencing towing.
- Before servicing or making any adjustments to the trailer:
  - Stop the tow vehicle and set the parking brake.
  - Shut off the tow vehicle’s engine and remove key from ignition.

- Keep all nuts, bolts and other fasteners tightened securely. Replace any parts removed during servicing or adjustments.