FORM NO. 3314-320

TORO®

MODEL NO. 20211-1000001 & UP

PARTS CATALOG

21" S.P. RECYCLER ™

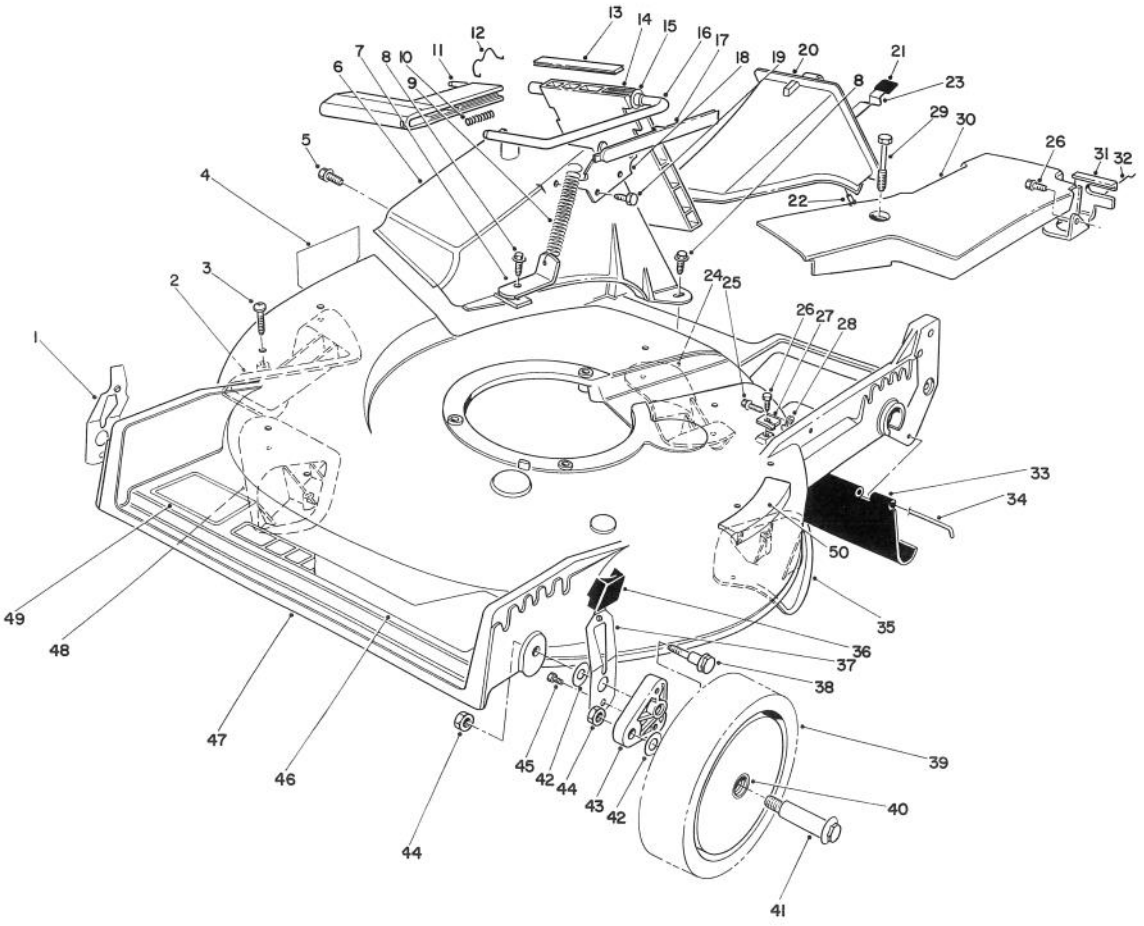

C-0614

HOUSING ASSEMBLY

Ref. No.	Part No.	Description	No. Used
1	71-0560	Spring Arm Ass'y R.H.	1
2	76-2130	Plate - Kicker Left Front	1
3	32104-130	Screw - Pan Hd.	8
4	43-8480	Decal - Danger	1
5	46-6810	Screw & Washer Ass'y	1
6	46-3501	Tunnel - Discharge	1
7	80-3780	Bracket - Spring	1
8	46-6811	Screw - Thread Forming Hex Washer Hd.	3
9	76-4660	Spring - Door	1
10	46-7060	Spring - Compression	1
11	46-3520	Handle - Door	1
12	47-5840	Door - Retainer	1
13	46-6821	Cover - Door	1
14	46-3511	Door - Discharge	1
15	23-0880	Bushing	1
16	76-4580	Rod - Door	1
17	49-4170	Cover - Handle	1
18	76-4570	Plate - Latch	1
19	46-8090	Screw - Self Tapping Hex Washer Hd.	2
20	77-0500	Plug Assembly (Incl. Ref. #21-23)	1
21	76-4650	Grip - Latch	1
22	3295-35	Rivet - Solid	1
23	76-4640	Latch - Discharge Plug	1
24	76-2150	Plate - Kicker Left Rear	1
25	12-5450	Screw - Self Tapping	1

© The TORO Company - 1990

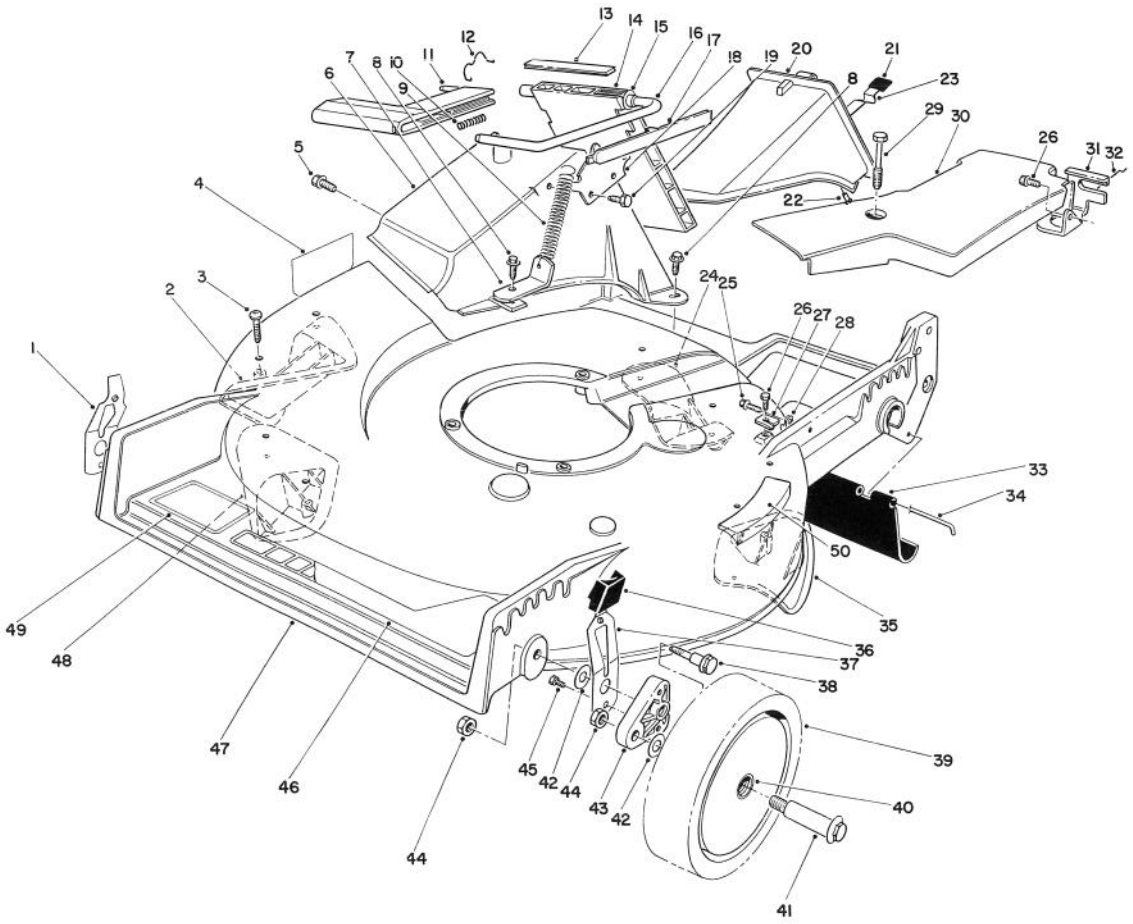

C-0614

HOUSING ASSEMBLY (CONTINUED)

Ref. No.	Part No.	Description	No. Used
26	32144-70	Screw - Thread Forming Hex Washer Hd.	2
27	62-3720	Clamp - Cable	1
28	2412-83	R-Clamp	1
29	37-7260	Capscrew - Special	2
30	62-4314	Cover - Belt	1
31	62-3940	Bracket - Traction Adj.	1
32	46-7030	Retainer - Cable	1
33	44-0580	Shield - Trailing	1
34	33-3208	Rod - Shield	1
35	76-2140	Plate -Kicker Right Rear	1
36	25-7740	Knob - Arm	2
37	71-0570	Spring Arm Ass'y - L.H.	1
38	66-0561	Screw - Shoulder	2
39	11-9509	Wheel & Tire Assembly (Incl. Ref. #40)	2

Ref. No.	Part No.	Description	No. Used
40	27-6250	Bushing - Wheel	4
41	27-6231	Bolt - Wheel	2
42	40-1940	Washer - Wheel Bolt	4
43	66-0580	Arm - Pivot	2
44	52-3620	Locknut	4
45	32144-85	Screw - Self Tapping	1
46	76-1950	Decal - Deck	1
47	14-1739	Housing Assembly (Incl. Ref. #4 & 50)	1
48	76-2120	Plate - Kicker Rt. Front	1
49	71-0600	Decal - Toro	1
50	46-7370	Decal - Step Pad	1
*	77-0200	Discharge Door Assembly (Incl Ref. #10, 11, 13-17)	1

*Not Illustrated

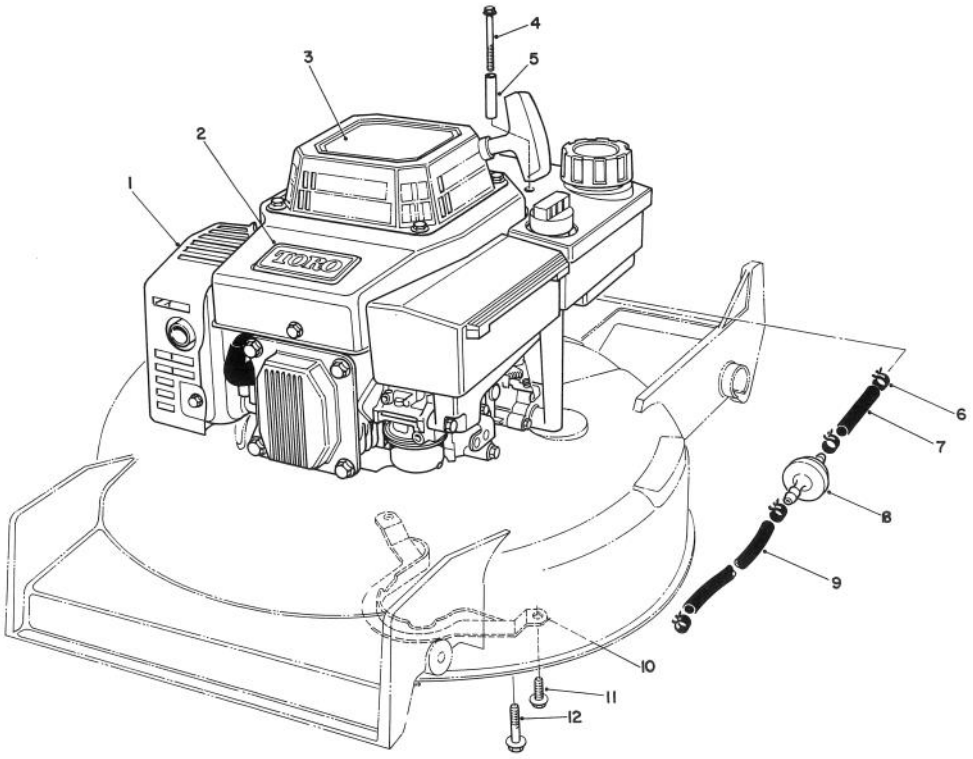

C-0400

ENGINE ASSEMBLY

Ref. No.	Part No.	Description	No. Used
1	72-4141	Engine	1
2	46-8290	Plate - Toro	1
3	66-0490	Decal - Recoil	1
4	56-6610	Screw - Thread Forming	2
5	57-3830	Spacer - Tubular	2
6	2412-95	Clamp - Fuel Line	4
7	51-3211	Line - Fuel	1

Ref. No.	Part No.	Description	No. Used
8	56-6360	Filter - Fuel	1
9	51-3214	Line - Fuel	1
10	62-3780	Guide - Belt	1
11	49-2040	Screw - Thread Forming	2
12	11-0590	Screw - Thread Forming	3
*	75-9850	Tube - Oil Drain	1

*Not Illustrated

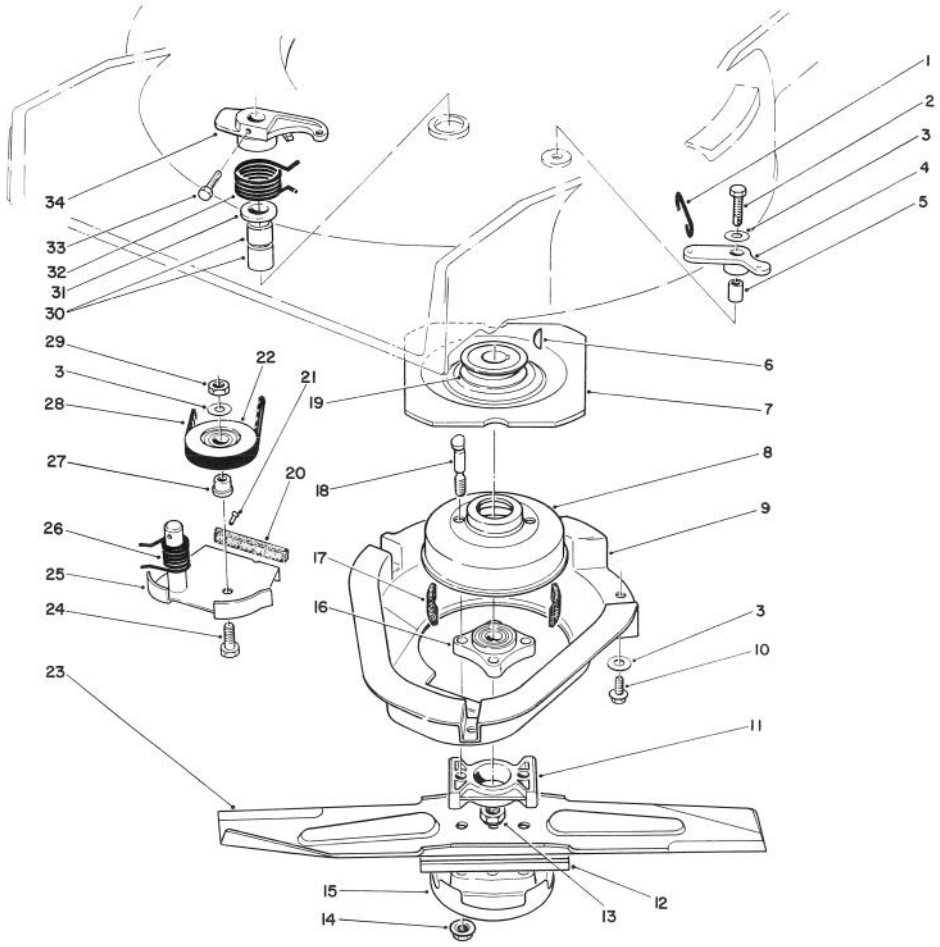

C-0615

BLADE BRAKE CLUTCH ASSEMBLY

Ref. No.	Part No.	Description	No. Used
1	49-2810	Link - Control	1
2	32104-107	Screw - Self Tap Hex Hd.	1
3	3256-23	Washer - Plain	5
4	49-7960	Bell Crank	1
5	49-7950	Sleeve - Bell Crank	1
6	3257-17	Key - Woodruff	1
7	56-6160	Flywheel	1
8	56-6170	Drum - Brake	1
9	46-5690	Shield	1
10	32144-70	Screw - Thread Forming Hex Washer Hd.	3
11	62-4280	Spacer - Blade	1
12	80-0510	Stiffener - Blade	1
13	3296-33	Locknut	1
14	54-9190	Locknut	2
15	80-2770	Cup - Anti-Scalp	1
16	42-6890	Hub Assembly	1
17	52-3480	Dampener - Vibration	2

Ref. No.	Part No.	Description	No. Used
18	42-3190	Bolt - Blade	2
19	62-7560	Pulley Driver	1
20		Pad - Brake	1
21	3295-23	Rivet - Semi Tubular	2
22	46-5650	Pulley Idler	1
23	75-9420	Blade - 21"	1
24	322-16	Hex Hd. Capscrew	1
25	49-7920	Brake Plate (Incl. Ref. #20 & 21)	1
26	46-5670	Spring - Torsion Lower	1
27	46-5630	Hub - Idler Pulley	1
28	42-0884	V-Belt	1
29	3296-47	Locknut	1
30	68-9780	Bearing	2
31	70-1160	Washer - P.M.	1
32	49-7970	Spring - Torsion Upper	1
33	32104-96	Screw - Self Tap Hex Hd.	1
34	49-2820	Lever	1

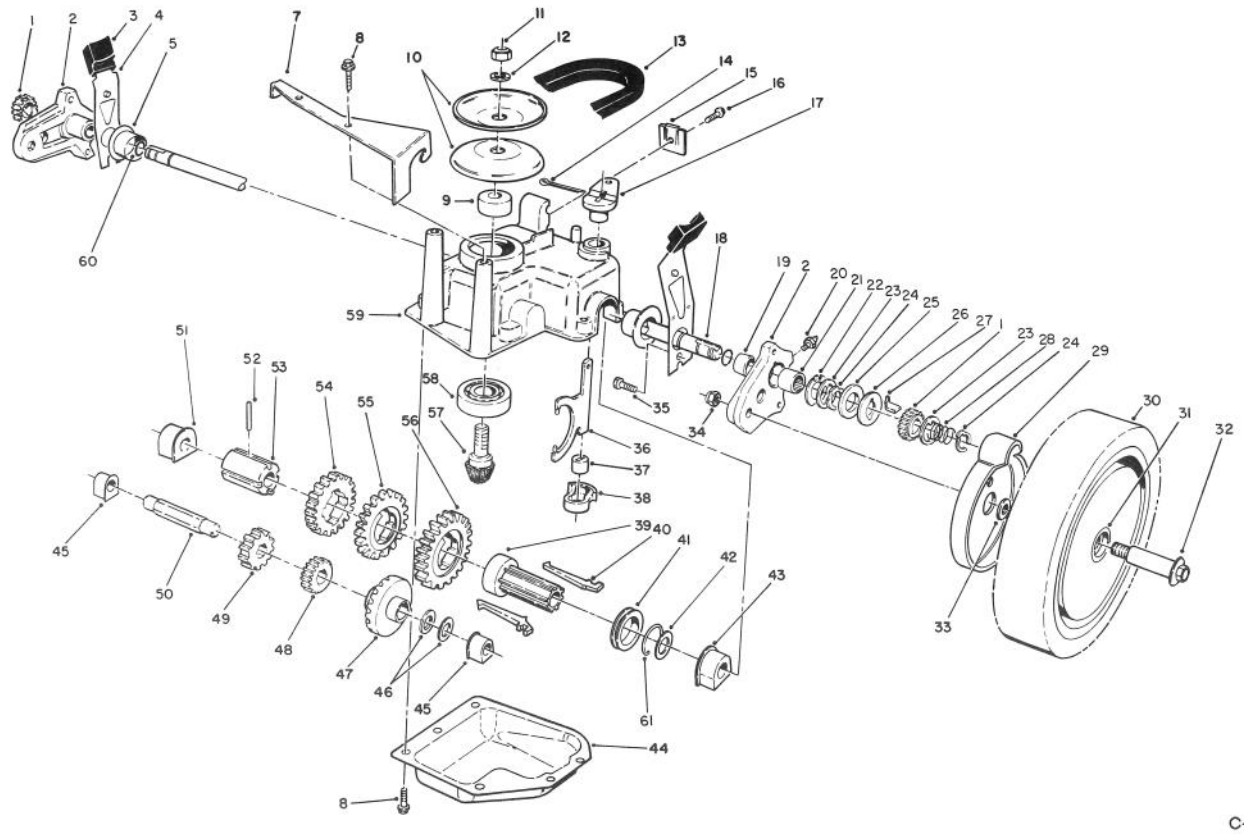

C-0521

GEAR CASE ASSEMBLY

Ref. No.	Part No.	Description	No. Used
1	65-4750	Pinion	2
2	63-8701	Pivot Arm Assembly (Incl. Ref # 19, 20, & 21)	2
3	25-7740	Knob - Arm	2
4	63-8720	Spring Arm Assembly	2
5	42-3520	End Cap	2
7	62-4320	Bracket - Belt Guide	1
8	49-2040	Screw - Self Tapping	8
9	62-6660	Spacer	1
10	60-8840	Pulley - Half	2
11	3296-5	Locknut	1
12	3256-24	Washer - Flat	1
13	62-3900	V-Belt	1
14	3272-10	Pin - Cotter	1
15	46-5610	Cable Clamp	1
16	32144-70	Screw - Thread Forming	1
17	60-8820	Lever - Shift	1
18	65-4770	Shaft - Output	1
19	70-9760	Bushing	2
20	302-56	Fitting - Grease	2
21	48-2060	Needle Bearing	2
22	65-4730	Thrust Washer	2
23	65-4740	Thrust Washer	4

Ref. No.	Part No.	Description	No. Used
24	65-2720	Ring - Retaining	4
25	65-4710	Ring - Friction	2
26	65-4760	Washer - Clutch	2
27	66-6050	Key - Rocker L.H.	1
*	66-6040	Key - Rocker R.H.	1
28	65-4720	Spring	2
29	74-1660	Cover - Wheel	2
30	11-9519	Wheel - Tire & Gear Ass'y (Incl. Ref. # 31)	2
31	27-6250	Bushing - Wheel	4
32	27-6231	Wheel Bolt	2
33	74-1670	Spacer - Wheel Cover	2
34	52-3620	Locknut	2
35	32144-85	Screw	2
36	60-8870	Yoke - Shift	1
37	29-9570	Bushing - Yoke	1
38	60-8810	Retainer - Shift Fork	1
39	76-0780	Sleeve - Shift Key	1
40	76-0760	Key - Shift	2
41	76-0770	Collar - Shift	1
42	36-4780	Washer - Thrust	1
43	60-8770	Bushing - Output Shaft	1
44	60-8730	Cover - Gear Case	1

*Not Illustrated

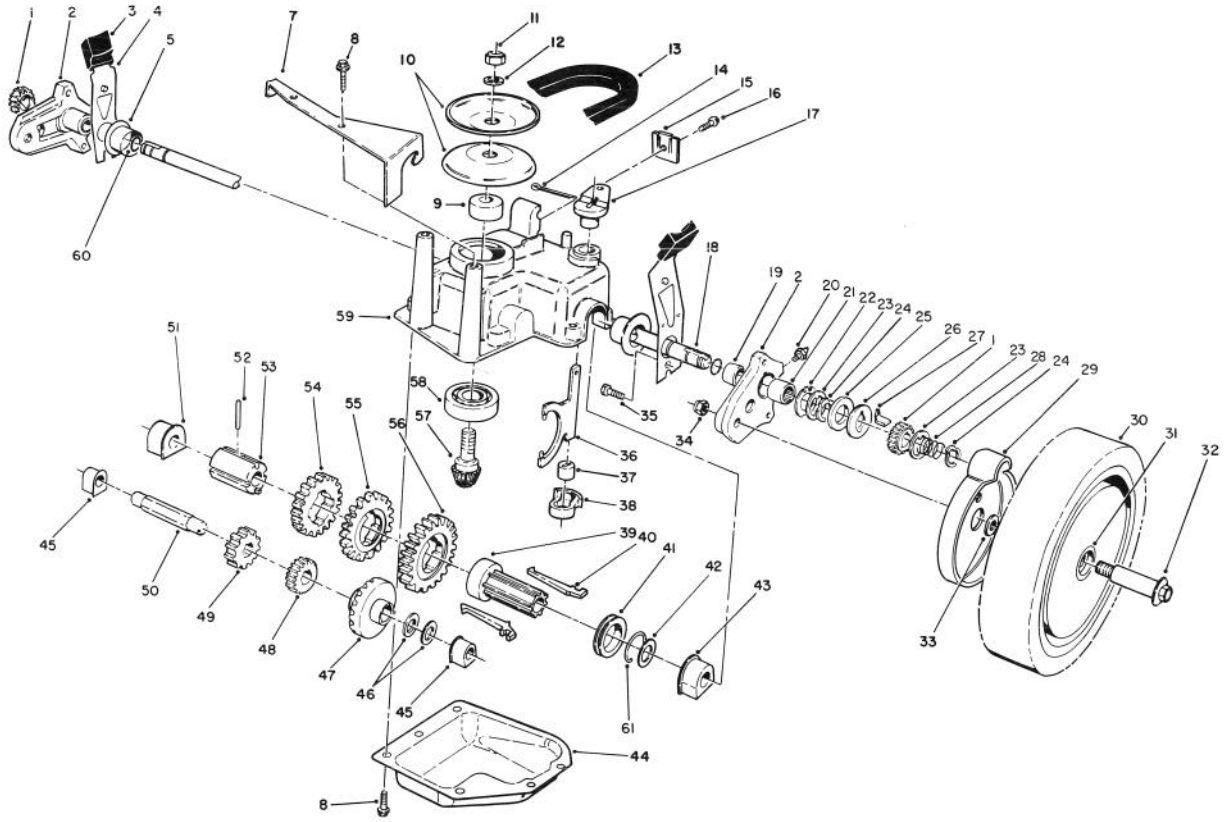

C-0521

GEAR CASE ASSEMBLY (CONTINUED)

Ref. No.	Part No.	Description	No. Used
45	60-8750	Bushing - Int. Shaft	2
46	36-4791	Washer - Thrust	2
47	55-3760	Gear - Pinion 15 Tooth	1
48	55-3780	Gear - Pinion 20 Tooth	1
49	55-3800	Gear - Pinion	1
50	60-8800	Shaft - Intermediate	1
51	60-8850	Bushing - Output Shaft	1
52	32121-120	Pin - Coil	1
53	60-8790	Sleeve - Gear	1

Ref. No.	Part No.	Description	No. Used
54	55-3810	Gear - 39 Tooth 3rd Gear	1
55	55-3790	Gear - 44 Tooth 2nd Gear	1
56	55-3770	Gear - 49 Tooth 1st Gear	1
57	60-8890	Pinion - Bevel	1
58	38-7820	Bearing - Ball	1
59	60-8710	Gear Case - Upper	1
60	237-153	O-Ring	2
61	65-5250	Clip - Spring	1
*	62-6673	Gear Case Assembly	1

*Not Illustrated

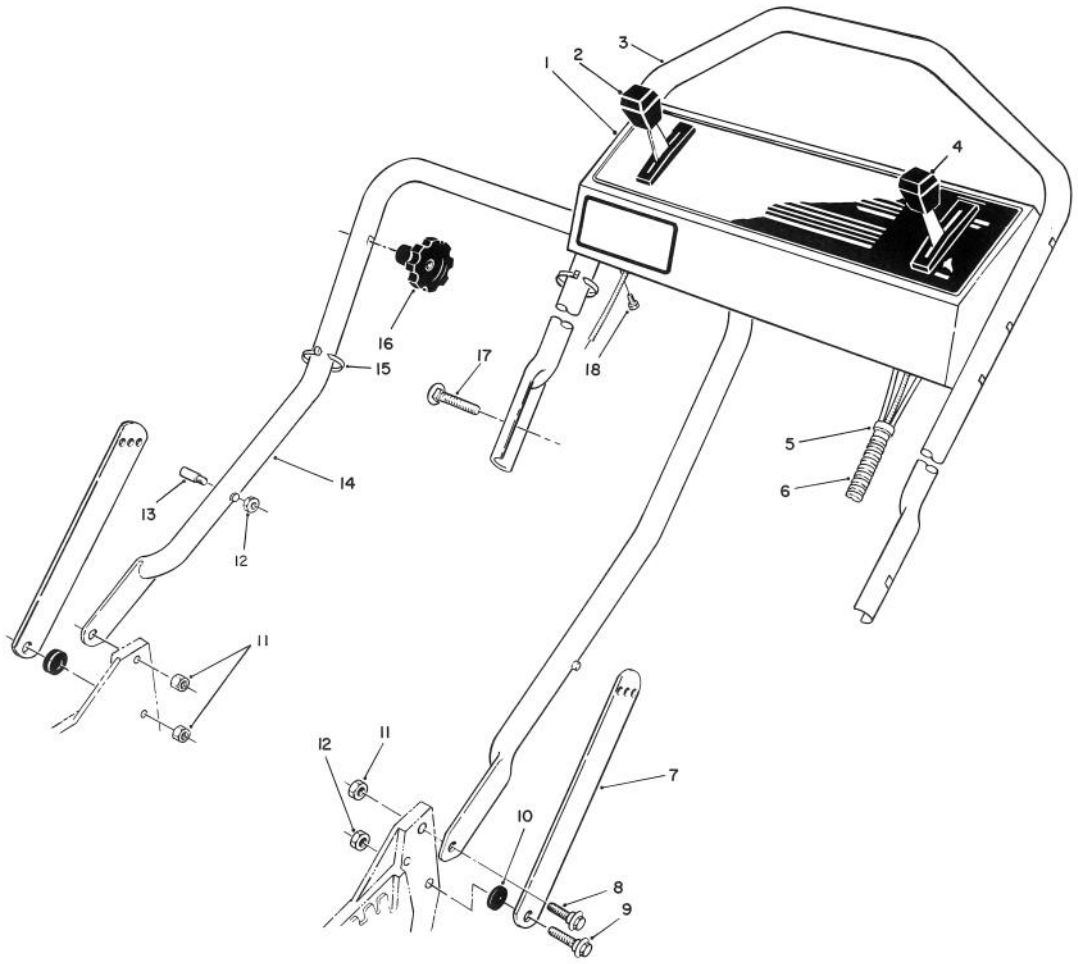

C-0406

HANDLE ASSEMBLY

Ref. No.	Part No.	Description	No. Used
1	70-7070	Panel - Control	1
2	76-2720	Control - Ground Speed (Bend Type # 1) (Sheath Lg. 42 1/4") (Wire Lg. 2 3/8")	1
3	46-5411	Handle - Upper	1
4	49-4186	Control - Throttle (Bend Type # 5) (Sheath Lg. 55 7/8") (Wire Lg. 2 3/8")	1
5	2412-50	Clip - Convoluted Tubing	4
6	46-6440	Cover - Control Cables	1

Ref. No.	Part No.	Description	No. Used
7	43-1370	Latch - Handle	2
8	27-7210	Screw - Shoulder	2
9	27-7211	Screw - Shoulder	2
10	3-3287	Spacer - Handle Latch	2
11	3296-29	Locknut	3
12	3296-47	Locknut	3
†13	49-2750	Pin - Handle	2
14	43-1361	Lower Handle Assembly	1
15	3290-378	Cable Tie	2
16	19-4050	Knob - Handle Release	2
17	17-9421	Screw - Handle	2
18	32104-76	Screw - Self Tapping Slotted	4

†Service Replacement Part

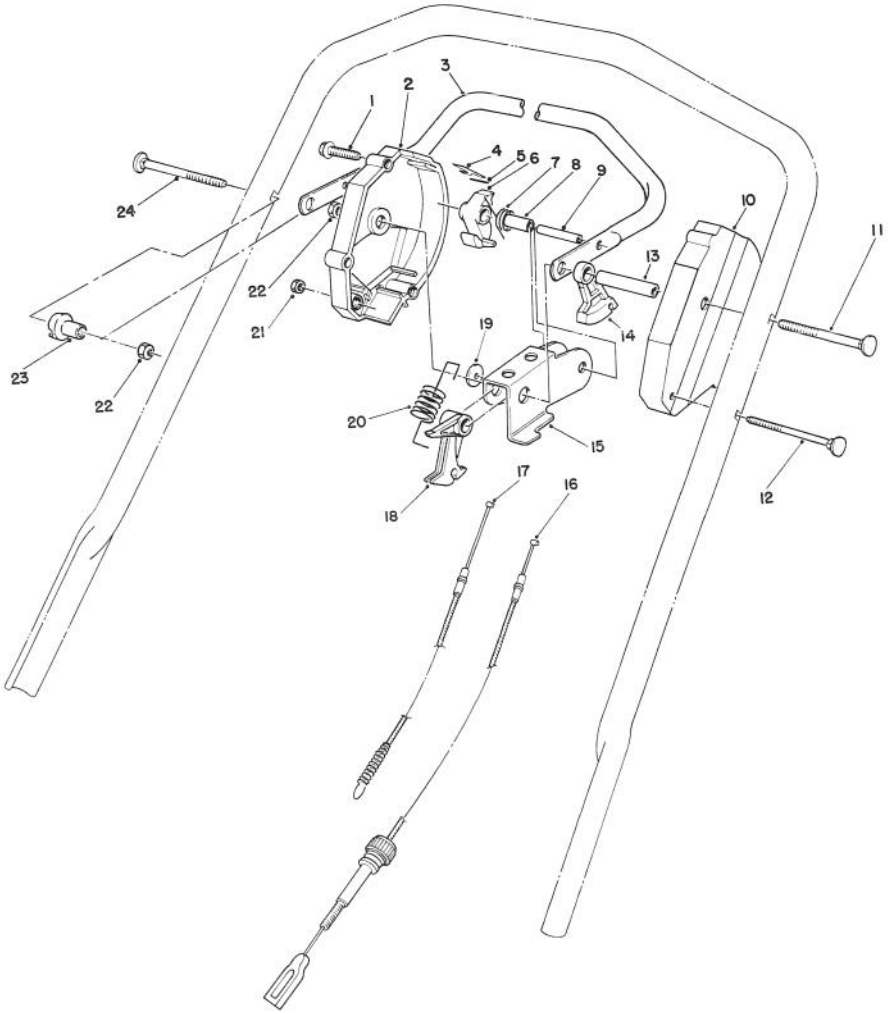

C-0341

TRACTION CONTROL ASSEMBLY

Ref. No.	Part No.	Description	No. Used
1	46-7040	Screw - Thread Forming Hex Washer Hd.	3
2	12-3429	Housing - Control R.H. (Incl Ref. # 4 & 5)	1
3	52-7430	Control Bar Assembly	1
4	52-7410	Spring - Leaf	1
5	57-6290	Pin - Insert	1
6	46-5530	Hook - Control	1
7	46-5510	Spring - Torsion	1
8	46-5550	Bushing - P.M.	1
9	32121-9	Pin - Coil	1
10	46-5460	Housing - Control L.H.	1
11	17-9422	Screw - Handle	1

Ref. No.	Part No.	Description	No. Used
12	46-6431	Screw - Handle	1
13	46-5590	Spacer	1
14	46-5520	Lever - Traction	1
15	66-0180	Rocker	1
16	46-5480	Cable - Traction	1
17	12-5999	Cable - Clutch	1
18	46-5540	Lever - Cable	1
19	66-0170	Washer - Nylon	1
20	66-0190	Spring - Detent	1
21	3296-8	Locknut	1
22	3296-58	Locknut	2
23	49-1630	Support - Spacer	1
24	17-9421	Screw - Handle	1

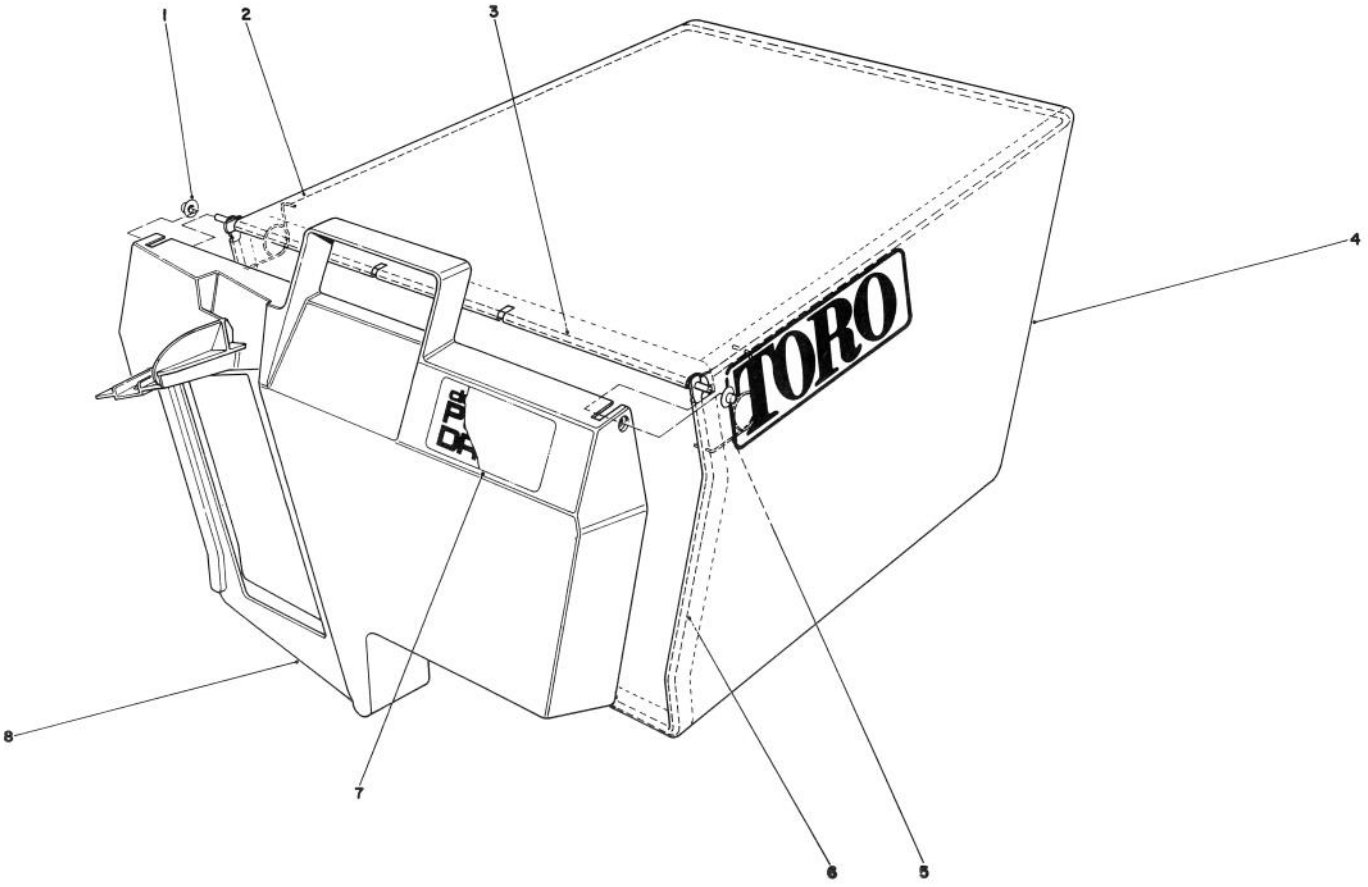

C-0331

GRASS BAG ASSEMBLY NO. 11-0189

Ref. No.	Part No.	Description	No. Used
1	3290-422	Nut - Push	2
2	42-4030	Bag Frame - Upper	1
3	33-4820	Hinge - Bag Door	1
4	44-0522	Bag - Grass	1

Ref. No.	Part No.	Description	No. Used
5	36-6910	Spring	2
6	42-4020	Frame - Bag	1
7	66-2150	Decal - Bag Door	1
8	37-1393	Door - Grass Bag	1

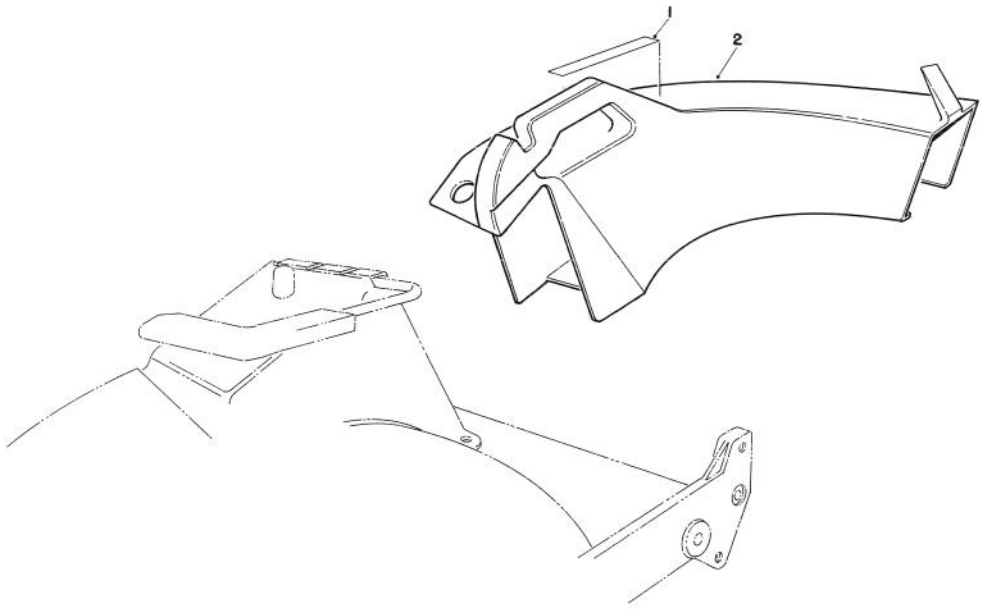

T-07.

SIDE DISCHARGE CHUTE MODEL NO 59168 (OPTIONAL)

Ref. No.	Part No.	Description	No. Used
1	76-4780	Decal - Caution	1
2	13-2239	Chute - Discharge (incl. Ref. #1)	1

Ref. No.	Part No.	Description	No. Used

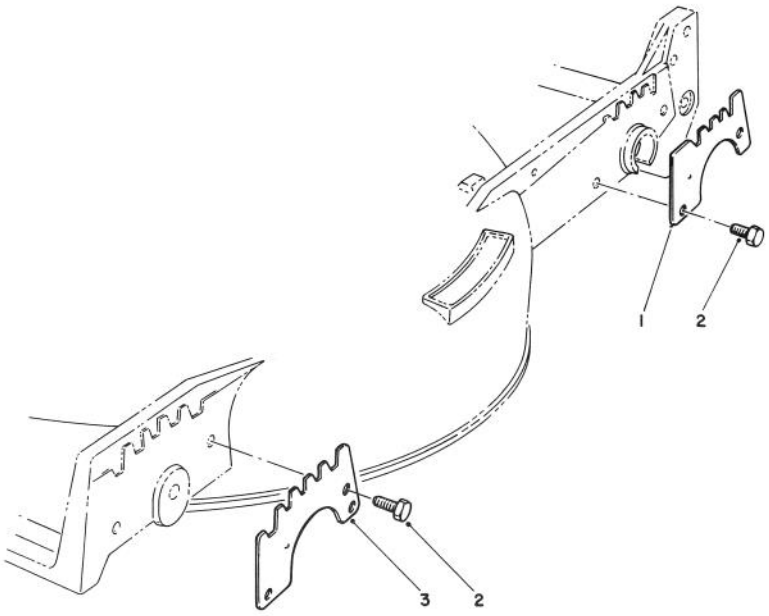

C-0332

WEAR PLATE MODEL NO. 49-4080 (OPTIONAL)

Ref. No.	Part No.	Description	No. Used
1	49-4070	Plate - Rear Wear	2
2	32104-17	Thread Forming Screw	8

Ref. No.	Part No.	Description	No. Used
3	43-5050	Plate - Wear Front	2

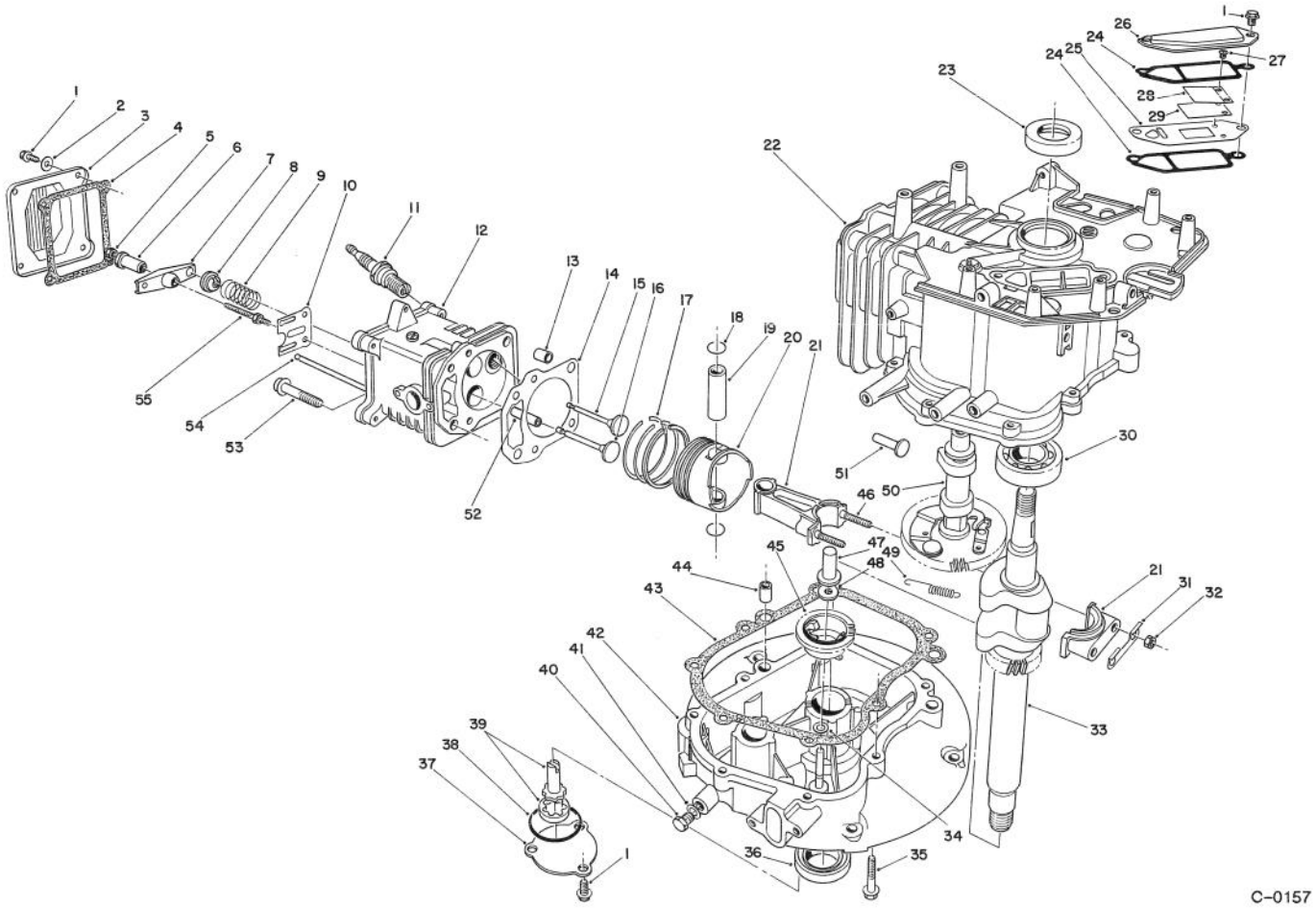

ENGINE ASSEMBLY
(MODEL NO. VML0-2)

Ref. No.	Part No.	Description	No. Used
1	81-1170	Bolt - Self Tapping	9
2	81-3790	Washer - Flat	4
3	81-3780	Cover - Rocker Arm	1
4	81-3770	Gasket - Rocker Arm Cover	1
5	81-3760	Nut - Jam	2
6	81-3750	Pivot - Rocker Arm	2
7	81-3740	Arm - Rocker	2
8	81-3730	Retainer - Valve Spring	2
9	81-3720	Spring - Valve	2
10	81-3710	Guide - Push Rod	1
11	81-3250	Spark Plug NGKBPR6ES	1
12	81-5540	Head - Cylinder Ass'y (Incl. Ref. #52)	1
13	81-3690	Pin - Dowel	2
14	81-4710	Gasket - Cylinder Head	1
*	81-3820	Gasket Set	A/R
15	81-3660	Valve - Exhaust	1
16	81-3670	Valve - Intake	1
17	81-3650	Ring Set	1
18	50-0960	Circlip	2
19	81-3630	Pin - Piston	1
20	81-3620	Piston	1

Ref. No.	Part No.	Description	No. Used
21	81-3390	Connection Rod Ass'y (Incl. Ref. #31, 32, 46)	1
22	81-3280	Block - Engine (Incl. Ref. #23 & 30)	1
23	81-3290	Seal - Upper Crankshaft	1
24	81-3300	Gasket - Breather	2
25		Plate - Breather	1
26	81-3320	Cover - Breather	1
27		Screw - Reed Valve	2
28		Retainer - Reed Valve	1
29		Valve - Reed	1
*	81-3370	Reed Valve Assembly (Incl. Ref. #25, & 27-29)	1
30	81-3380	Ball Bearing	1
31	81-3400	Plate - Lock	1
32	50-0510	Nut	2
33	81-3430	Crankshaft	1
34	81-3440	Washer	1
35	81-3450	Bolt	7
36	81-3460	Seal - Lower Crankshaft	1
37	81-3470	Cover - Oil Pump	1

*Not Illustrated

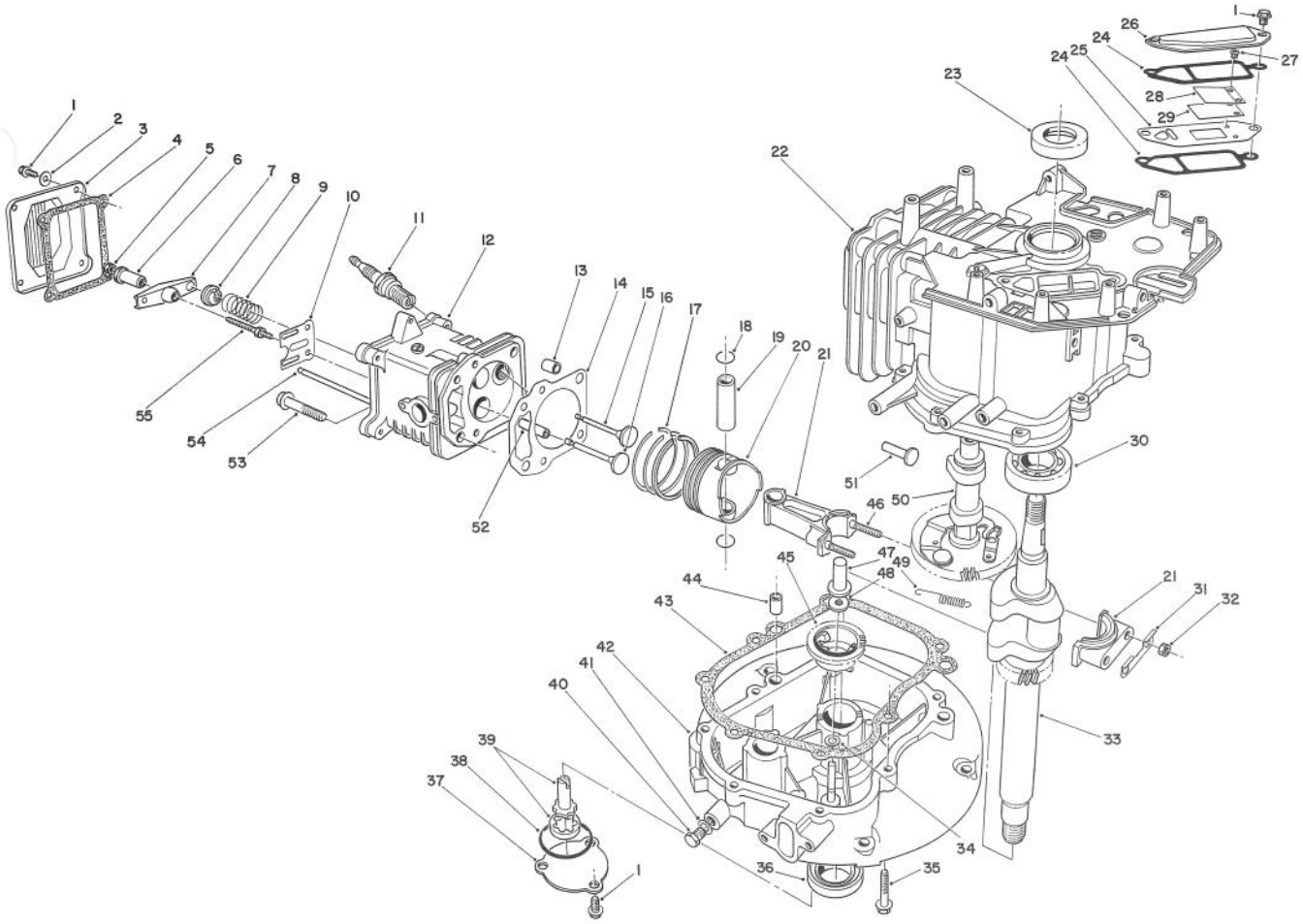

C-0157

ENGINE ASSEMBLY (CONTINUED) (MODEL NO. VML0-2)

Ref. No.	Part No.	Description	No. Used
38	81-3480	O-Ring	1
39	81-3490	Oil Pump Assembly	1
40	81-4970	Plug - Oil Drain	1
41	81-3510	Gasket - Drain Plug	1
42	81-3520	Crankcase - Lower	1
43	81-3530	Gasket - Crankcase	1
44	50-0450	Pin - Dowel	2
45	81-3550	Governor Flyweight Ass'y	1
46	81-3610	Stud - Connection Rod	2
47	81-3560	Plunger - Governor	1
48	81-3570	Washer	1

Ref. No.	Part No.	Description	No. Used
49	81-3580	Spring - Compression Release	1
50	81-5550	Camshaft Assembly (Incl. Ref. #49)	1
51	81-3600	Tappet	2
52	81-3830	Guide - Valve	2
53	50-0190	Bolt	4
54	81-3810	Rod - Push	2
55	81-3800	Stud - Rocker Arm	2
*	13-5939	Short Block Assembly	1
*	75-9850	Tube - Oil Drain	1

*Not Illustrated

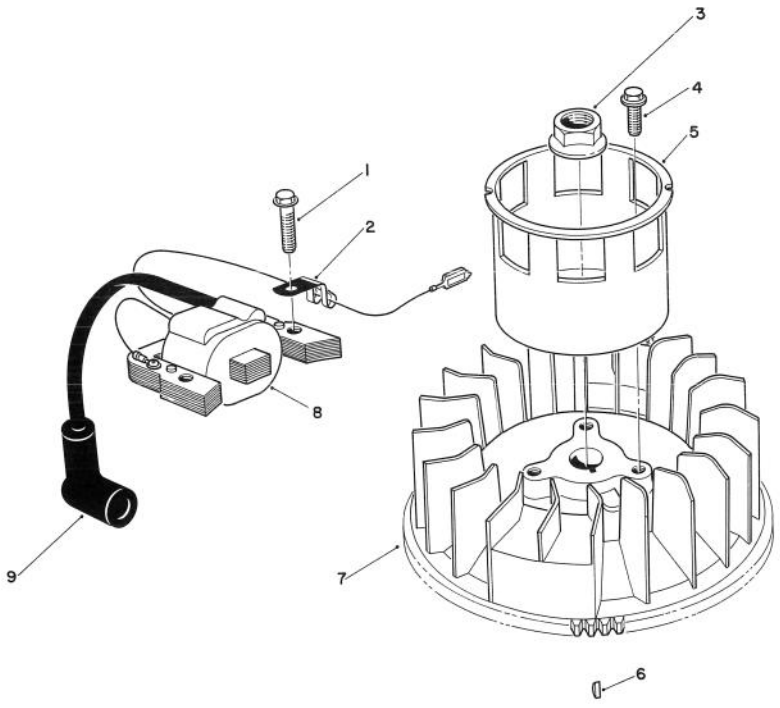

C-0305

MAGNETO & FLYWHEEL ASSEMBLY (MODEL VML0-2)

Ref. No.	Part No.	Description	No. Used
1	53-0860	Bolt	2
2	81-1480	Clamp	1
3	81-3890	Nut	1
4	81-1300	Bolt	3
5	81-3910	Cup - Starter	1

Ref. No.	Part No.	Description	No. Used
6	81-3930	Key - Flywheel	1
7	81-3920	Flywheel	1
8	81-5580	Coil Assembly - Magneto (Incl. Ref. # 9)	1
9	81-3860	Cover - Spark Plug	1

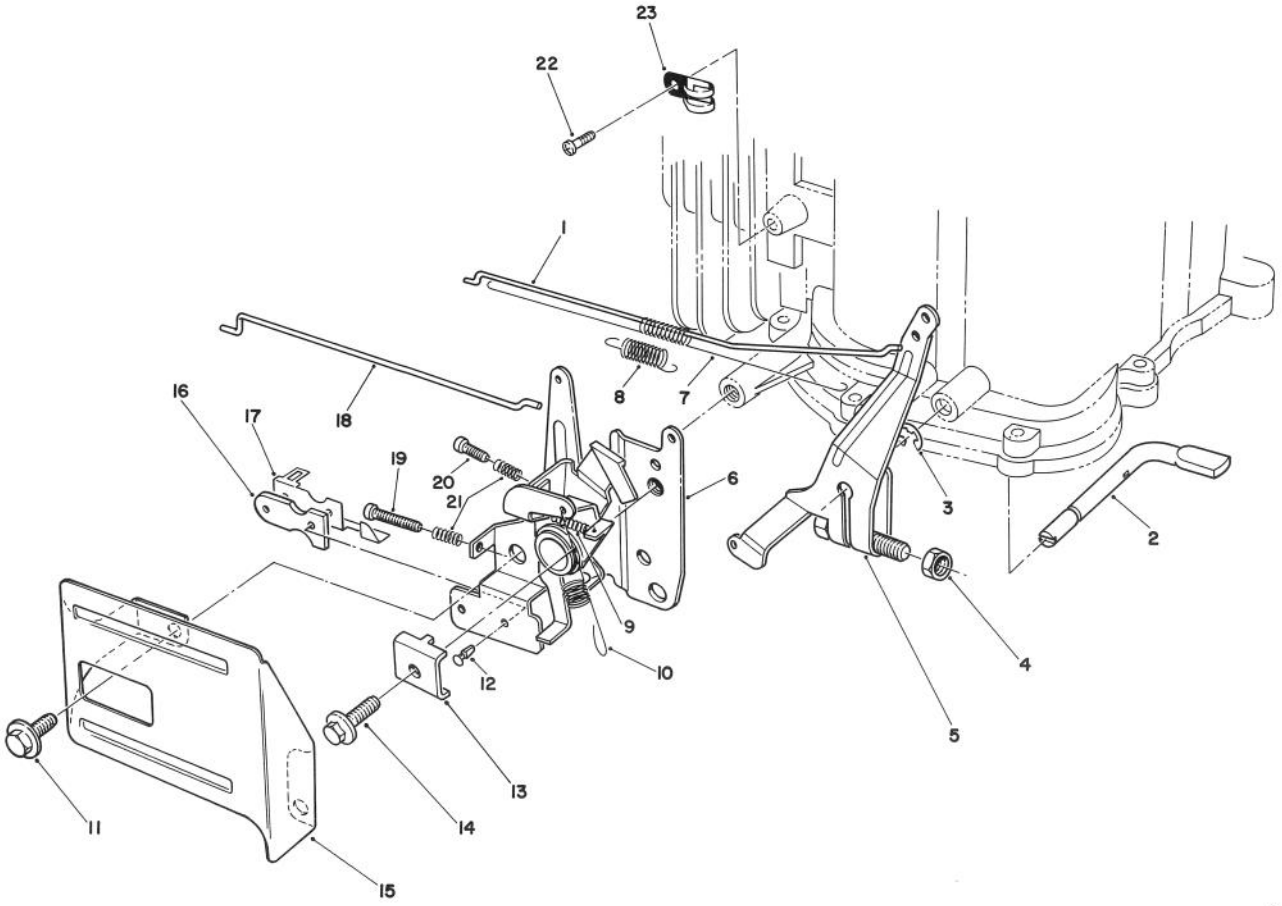

C-0407

GOVERNOR ASSEMBLY (MODEL NO. VML0-2)

Ref. No.	Part No.	Description	No. Used
1	81-4450	Rod - Carburetor	1
2	81-4480	Shaft - Governor	1
3	81-4540	E-Ring	1
4	81-3760	Nut	1
5	81-4500	Governor Arm Assembly	1
6	81-4510	Throttle & Choke Control	1
7	81-4470	Spring - Carburetor Rod	1
8	81-4460	Spring - Choke Lever	1
9	81-4570	Spring	1
10	81-4520	Spring - Governor	1
11	81-1170	Bolt	2
12	81-4530	Rivet	2

Ref. No.	Part No.	Description	No. Used
13	81-1690	Clamp - Cable	1
14	50-0130	Bolt	1
15	57-5750	Guard - Throttle	1
16	81-1830	Insulator - Kill Switch	1
17	81-1840	Terminal - Switch	1
18	81-4440	Rod - Choke	1
19	81-4560	Screw	1
20	81-4550	Screw	1
21	81-2900	Spring	2
22	81-0380	Screw	1
23	81-4780	Clamp	1

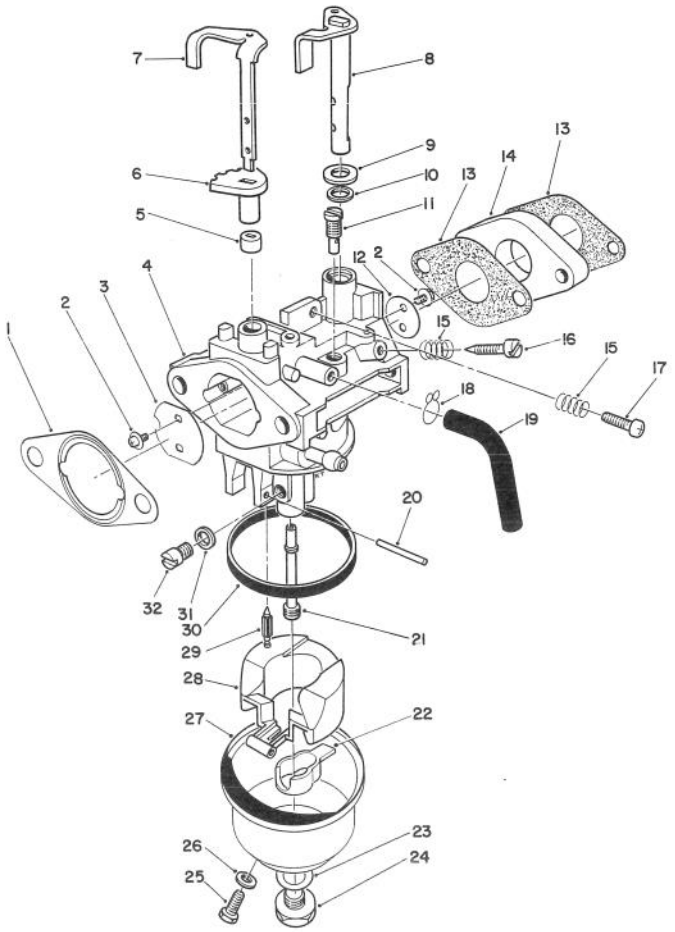

C-0160

CARBURETOR ASSEMBLY (MODEL NO. VML0-2)

Ref. No.	Part No.	Description	No. Used
1	81-4250	Gasket - Air Cleaner	1
2	81-2710	Screw - Choke Valve	4
3	81-2720	Valve - Choke	1
4		Body - Carburetor	1
5	81-5530	Ring - Lower Choke	1
6	81-5520	Ring - Upper Choke	1
7	81-5510	Shaft - Choke Valve	1
8	81-2920	Shaft - Throttle Valve	1
9	81-4280	Washer	1
10	81-4290	Seal - Throttle Shaft	1
11	81-5620	Jet - Pilot (#38.8)	1
12	81-2940	Valve - Throttle	1
13	81-5560	Gasket - Carburetor	2
14	81-5570	Block - Insulator	1
15	81-2580	Spring	2
16	50-2360	Screw - Pilot	1
17	50-0250	Screw - Idler Stop	1
18	81-4300	Clamp	1
19	81-4310	Tube - Bowl Vent	1
20	81-5600	Pin - Hinge	1
21	81-5630	Nozzle - Main	1

Ref. No.	Part No.	Description	No. Used
22	81-4940	Spacer - Float	1
23	81-2650	Gasket - Bowl Screw	1
24	81-2660	Screw - Bowl	1
25	81-2670	Screw - Drain	1
26	81-2680	Gasket - Drain Screw	1
27	81-4340	Bowl - Float	1
28	81-4920	Float	1
29	81-4700	Needle	1
30	81-2630	Gasket - Float Bowl	1
31	81-4350	Spacer	1
32	81-2340	Main Jet (#72.5)	1
*	81-5610	Main Jet (#70) (For high alt.)	1
*	81-4270	Shaft - Choke Assembly (Incl. Ref. # 5, 28, & 29)	1
*	81-5590	Carburetor Assembly (Incl. Ref. # 2-33)	1
*	81-5650	Carburetor Repair Kit (Incl . Ref. #1, 13, 23, 26, 29, & 30)	1

*Not Illustrated

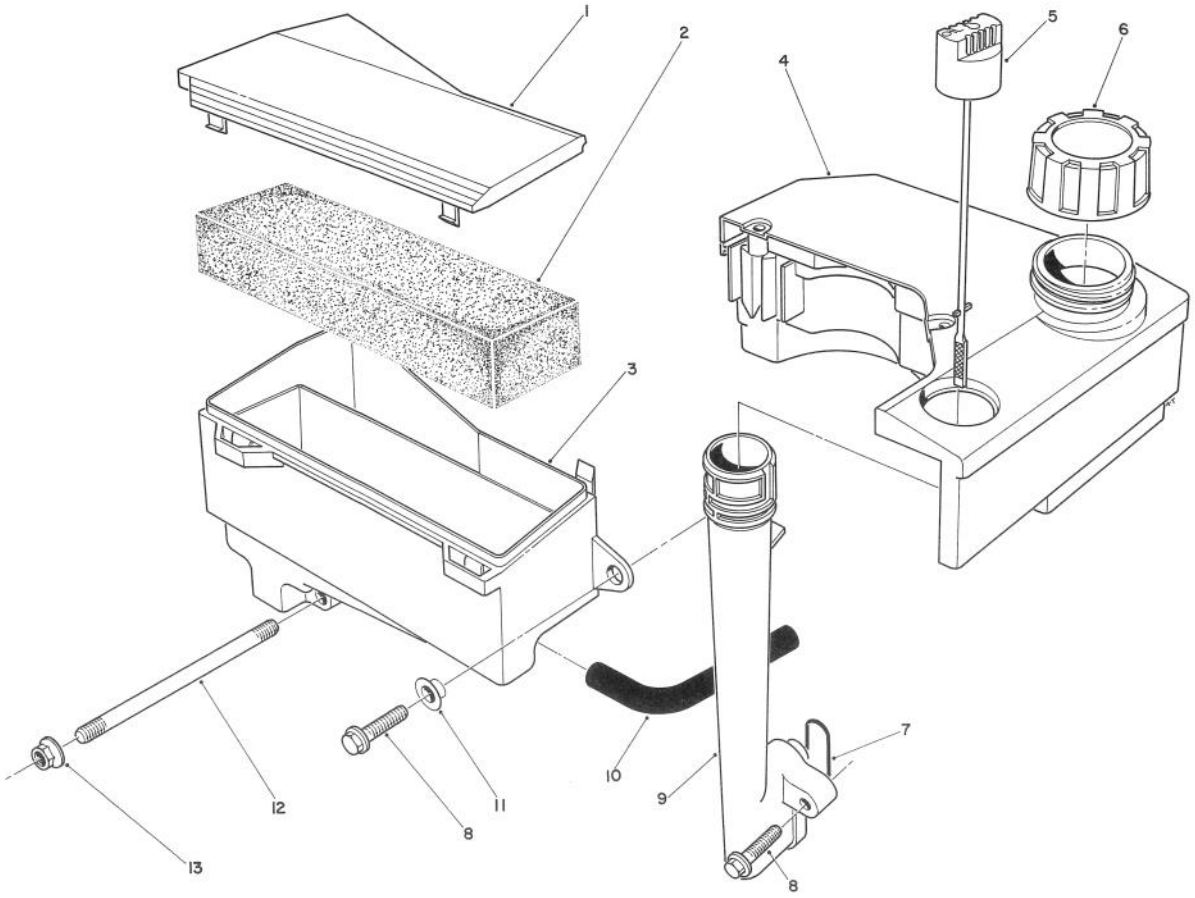

C-0161

AIR CLEANER & FUEL TANK ASSEMBLY (MODEL NO. VML0-2)

Ref. No.	Part No.	Description	No. Used
1	81-4110	Cover - Air Cleaner	1
2	81-4120	Filter - Foam	1
3		Body - Air Cleaner	1
4	55-3530	Fuel Tank	1
5	81-4140	Dipstick - Oil	1
6	55-3570	Gas Cap	1
7	81-4150	O-Ring - Oil Tube	1
8	81-4160	Bolt	3
9	81-4170	Tube - Oil Fill	1
10	81-4180	Hose Crankcase Breather	1
11	81-4200	Spacer	1
12	81-4220	Stud - Carburetor	2
13	50-7180	Nut	2
*	81-4240	Air Cleaner Assembly (Incl. Ref. # 1 & 3)	1

*Not Illustrated

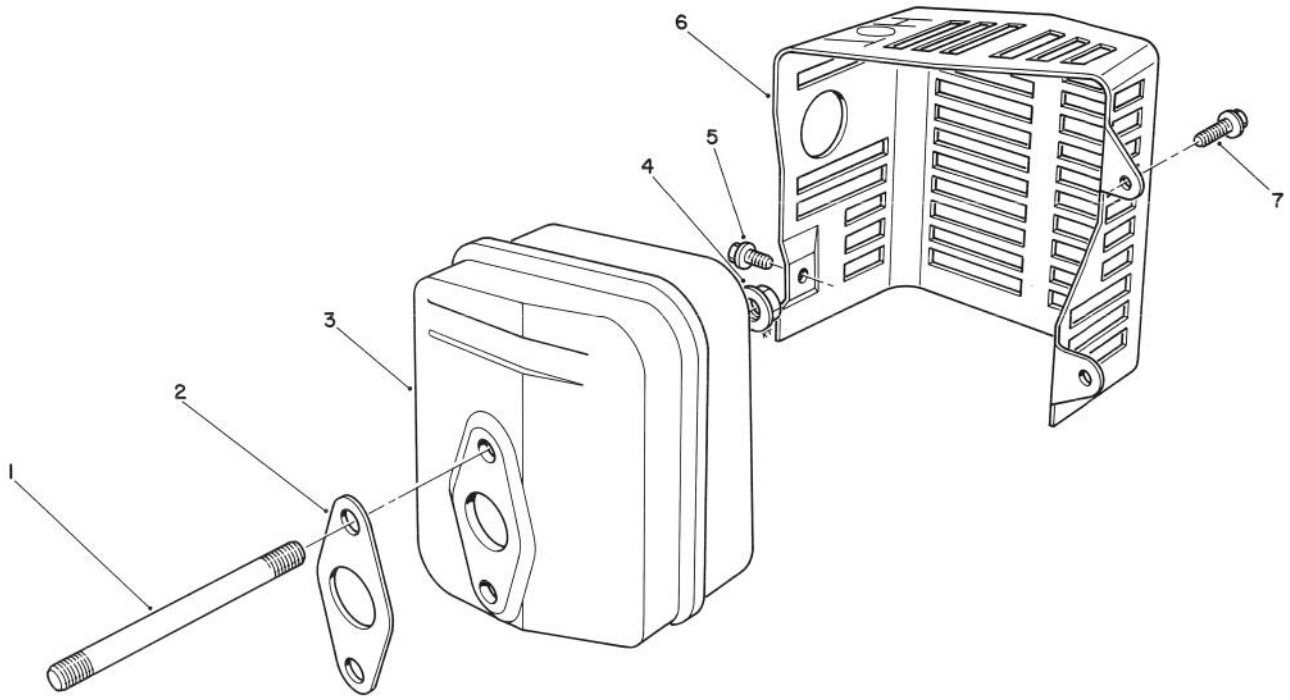

T-0726

MUFFLER ASSEMBLY (MODEL NO. VML0-2)

Ref. No.	Part No.	Description	No. Used
1	81-4380	Stud - Muffler	2
2	81-4390	Gasket - Muffler	1
3	81-4400	Muffler	1
4	50-0530	Nut	2
5	81-4420	Screw	1

Ref. No.	Part No.	Description	No. Used
6	81-4430	Cover - Muffler	1
7	81-1170	Bolt	2
*	56-6730	Spark Arrestor Kit (Incl. Ref. # 2) (Optional)	1

*Not Illustrated

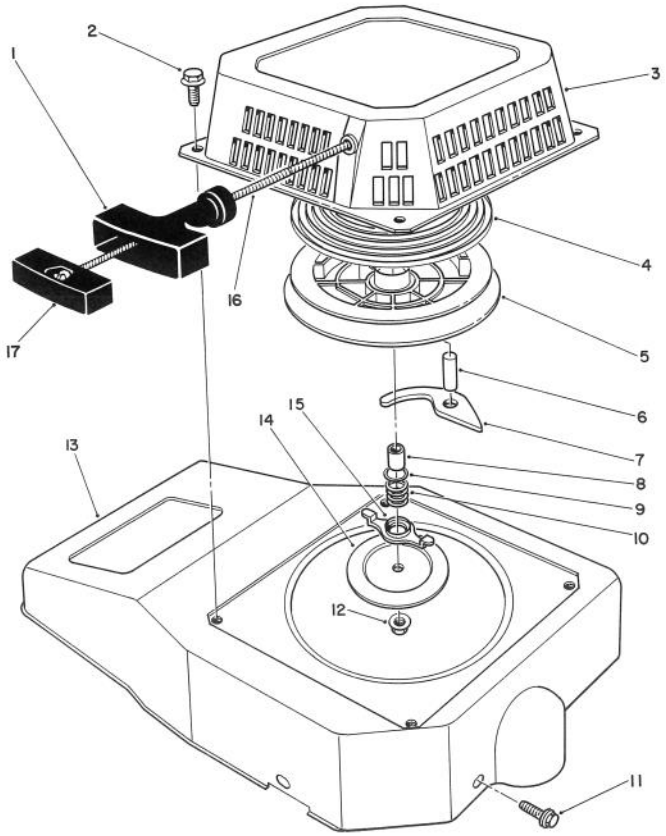

C-0162

RECOIL ASSEMBLY (MODEL NO. VML0-2)

Ref. No.	Part No.	Description	No. Used
1	81-4000	Handle	1
2	81-1280	Bolt	4
3	81-3970	Case - Recoil	1
4	81-4010	Spring - Recoil	1
5	81-4020	Reel - Rope Pulley	1
6	81-4030	Pin	1
7	81-4040	Pawl	1
8	81-4050	Spacer	1
9	81-4060	Washer	1
10	81-4070	Spring - Friction	1

Ref. No.	Part No.	Description	No. Used
11	81-1170	Bolt	3
12	81-4100	Locknut	1
13	81-3960	Shroud - Blower	1
14	81-4090	Plate - Friction	1
15	81-4080	Guide - Pawl	1
16	81-1270	Rope - Recoil	1
17	81-4960	Retainer - Rope Handle	1
*	81-3270	Recoil Starter Assembly (Incl. Ref. # 1, 3-10, 12, & 14-17)	1

*Not Illustrated

MAINTENANCE RECORD

Date								