Form No. 3355-458 Rev B

CCR Powerlite® Snowthrower

Model No. 38173—Serial No. 270000001 and Up

Operator's Manual

Introduction

Read this information carefully to learn how to operate and maintain your product properly and to avoid injury and product damage. You are responsible for operating the product properly and safely.

You may contact Toro directly at www.Toro.com for product and accessory information, help finding a dealer, or to register your product.

Whenever you need service, genuine Toro parts, or additional information, contact an Authorized Service Dealer or Toro Customer Service and have the model and serial numbers of your product ready. Figure 1 identifies the location of the model and serial numbers on the product. Write the numbers in the space provided.

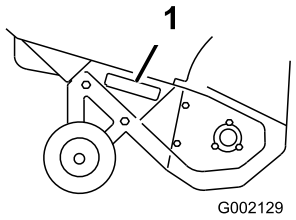

Figure 1

1. Model and serial number location

Model No. _____

Serial No. _____

This manual identifies potential hazards and has safety messages identified by the safety alert symbol (Figure 2), which signals a hazard that may cause serious injury or death if you do not follow the recommended precautions.



Figure 2

1. Safety alert symbol

This manual uses 2 words to highlight information. **Important** calls attention to special mechanical information and **Note** emphasizes general information worthy of special attention.

Safety

This snowthrower meets or exceeds the ISO standard 8437 in effect at the time of production.

Read and understand the contents of this manual before the engine is ever started.

⚠This is the safety alert symbol. It is used to alert you to potential personal injury hazards. Obey all safety messages that follow this symbol to avoid possible injury or death.

Improperly using or maintaining this snowthrower could result in injury or death. To reduce this potential, comply with the following safety instructions.

Training

- Read the operating and service instruction manual carefully. Be thoroughly familiar with the controls and the proper use of the equipment. Know how to stop the unit and disengage the controls quickly.
- Never allow children to operate the equipment. Never allow adults to operate the equipment without proper instruction.
- Keep the area of operation clear of all persons, particularly small children, and pets.
- Exercise caution to avoid slipping or falling, especially when operating in reverse.

Preparation

- Thoroughly inspect the area where the equipment is to be used and remove all doormats, sleds, boards, wires, and other foreign objects.
- Disengage all clutches and shift into neutral before starting the engine.
- Do not operate the equipment without wearing adequate winter garments.
- Wear footwear which will improve footing on slippery surfaces.
- Handle fuel with care; it is highly flammable.
  - Use an approved fuel container.
  - Never add fuel to a running or hot engine.
  - Fill fuel tank outdoors with extreme care. Never fill fuel tank indoors.

© 2006—The Toro® Company
8111 Lyndale Avenue South
Bloomington, MN 55420

Register at www.Toro.com.

CE

Original Instructions (EN)
Printed in the USA
All Rights Reserved

  - Replace gasoline caps securely and wipe up spilled fuel.
- Adjust the collector housing height to clear gravel or crushed rock surface.
- Never attempt to make any adjustments while the engine is running (except where specifically recommended by manufacturer).
- Let engine and machine adjust to outdoor temperatures before starting to clear snow.
- The operation of any powered machine can result in foreign objects being thrown into the eyes. Always wear safety glasses or eye shields during operation or while performing an adjustment or repair.

Operation

- Do not put hands or feet near or under rotating parts. Keep clear of the discharge opening at all times.
- Exercise extreme caution when operating on or crossing gravel drives, walks, or roads. Stay alert for hidden hazards or traffic.
- After striking a foreign object, stop the engine, remove the wire from the spark-plug, thoroughly inspect the snow thrower for any damage, and repair the damage before restarting and operating the snow thrower.
- If the unit should start to vibrate abnormally, stop the engine and check immediately for the cause. Vibration is generally a warning of trouble.
- Stop the engine whenever you leave the operating position, before unclogging the collector/impeller housing or discharge guide, and when making any repairs, adjustments, or inspections.
- When cleaning, repairing, or inspecting, make certain the collector/impeller and all moving parts have stopped. Disconnect the spark-plug wire, and keep the wire away from the plug to prevent accidental starting.
- Do not run the engine indoors, except when starting it and for moving the snow thrower in or out of the building. Open the outside doors; exhaust fumes are dangerous.
- Do not clear snow across the face of slopes. Exercise extreme caution when changing direction on slopes. Do not attempt to clear steep slopes.
- Never operate the snow thrower without proper guards, plates, or other safety protective devices in place.
- Never operate the snow thrower near glass enclosures, automobiles, window wells, drop-offs, etc. without proper adjustment of the snow discharge angle. Keep children and pets away.
- Do not overload the machine capacity by attempting to clear snow at too fast a rate.
- Use care when reversing.
- Never direct discharge at bystanders or allow anyone in front of the unit.
- Disengage power to the collector/impeller when snow thrower is transported or not in use.
- Use only attachments and accessories approved by the manufacturer of snow thrower (such as wheel weights, counterweights, cabs, etc.).
- Never operate the snow thrower without good visibility or light. Always be sure of your footing, and keep a firm hold on the handles. Walk; never run.
- Never operate the snow thrower without good visibility or light.
- Take all possible precautions when leaving the machine unattended.

Maintenance and Storage

- Check all fasteners at frequent intervals for proper tightness to be sure the equipment is in safe working condition.
- Never store the machine with fuel in the fuel tank inside a building where ignition sources are present such as hot water and space heaters, clothes dryers, etc. Allow the engine to cool before storing in any enclosure.
- Always refer to owner's guide instructions for important details if the snow thrower is to be stored for an extended period.
- Maintain or replace safety and instructions labels, as necessary.
- Run the machine a few minutes after throwing snow to prevent freeze-up of the collector/impeller.

Toro Snowthrower Safety

The following list contains safety information specific to Toro products or other safety information that you must know.

- **Rotating rotor blades can injure fingers or hands.** Stay behind the handles and away from the discharge opening while operating the snowthrower. **Keep your face, hands, feet, and any other part of your body or clothing away from moving or rotating parts.**
- Before adjusting, cleaning, repairing, and inspecting the snowthrower, and before unclogging the discharge chute, **stop the engine, remove the key, and wait for all moving parts to stop.**
- Use a stick, **not your hands**, to remove obstructions from the discharge chute.
- **Before** leaving the operating position, stop the engine, remove the key, and wait for all moving parts to stop.
- Do not wear loose-fitting clothing that could get caught in moving parts.

- If a shield, safety device, or decal is damaged, illegible, or lost, repair or replace it before beginning operation. Also, tighten any loose fasteners.
- **Do not** smoke while handling gasoline.
- **Do not** use the snowthrower on a roof.
- Do not touch the engine while it is running or soon after it has stopped because the engine may be hot enough to cause a burn.
- Perform only those maintenance instructions described in this manual. Before performing any maintenance, service, or adjustment, stop the engine, remove the key, and disconnect the wire from the spark plug. If major repairs are ever needed, contact an Authorized Service Dealer.
- Do not change the governor settings on the engine.
- When storing the snowthrower for more than 30 days, drain the fuel from the fuel tank to prevent a potential hazard. Store fuel in an approved fuel container. Remove the key from the ignition switch before storing the snowthrower.
- Purchase only genuine Toro replacement parts and accessories.

Sound Pressure

This unit has a maximum sound pressure level at the operator's ear of 90 dBA, based on measurements of identical machines per EN 11201.

Sound Power

This unit has a guaranteed sound power level of 107 dBA, based on measurements of identical machines per EN 3744.

Vibration

This unit does not exceed a hand/arm vibration level of 11.4 m/s^2, based on measurements of identical machines per EN 1033.

Safety and Instructional Decals

Important: Safety and instruction decals are located near areas of potential danger. Replace damaged decals.



94-2560

1. Cutting/dismemberment hazard, impeller—stay away from moving parts; remove the key and read the instructions before servicing or performing maintenance.



94-2561

1. Hot surface/burn hazard—keep bystanders a safe distance from the machine.

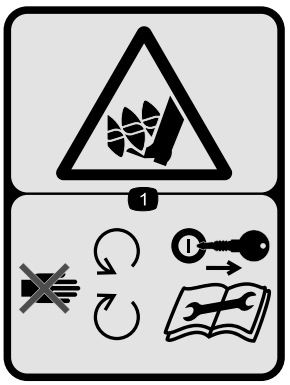

94-2562

1. Cutting/dismemberment hazard, auger—stay away from moving parts; remove the key and read the instructions before servicing or performing maintenance.

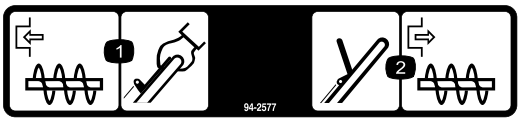

94-2577

1. To engage the auger, hold the control bar against the handle.
2. To disengage the auger, release the control bar.

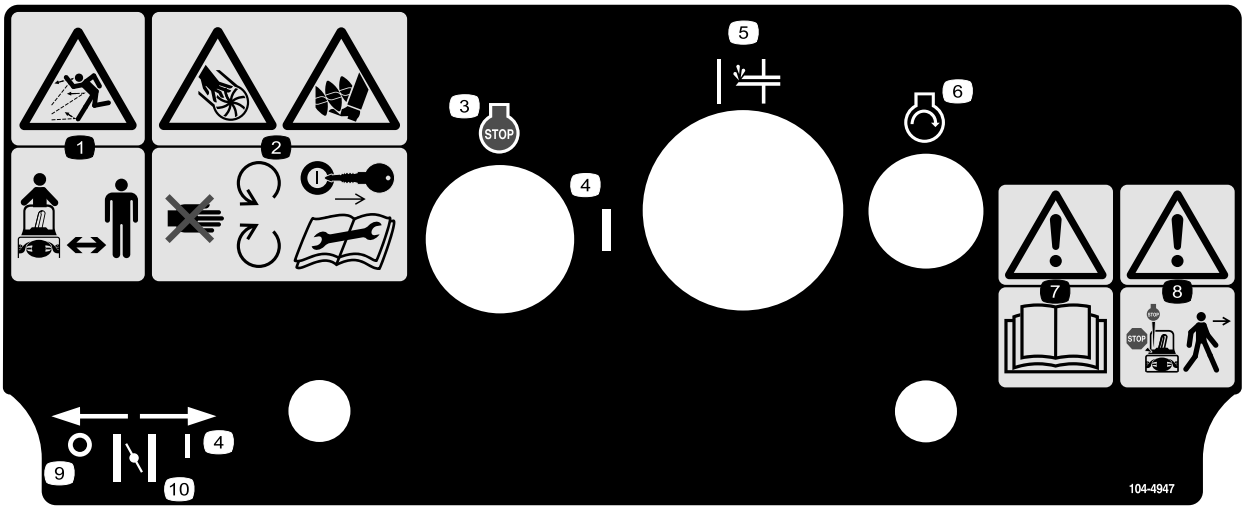

104-4947

1. Thrown object hazard—keep bystanders a safe distance from the snowthrower.
2. Cutting/dismemberment hazard, impeller and auger—stay away from moving parts; remove the key and read the instructions before servicing or performing maintenance.
3. Engine—stop
4. On
5. Primer
6. Engine—start
7. Warning—read the *Operator's Manual.*
8. Warning—stop the engine before leaving the machine.
9. Off
10. Choke

Setup

Loose Parts

Use the chart below to verify that all parts have been shipped.

Step	Description	Qty.	Use
1.	Oval-head bolts Curved washers Handle knobs	2 2 2	Install the handle.
2.	Discharge chute Washers Locknuts	1 3 3	Install the discharge chute.
3.	No parts required	–	Install the control cable.

1. Installing the Handle

1. Position the ends of the upper handle on the inside of the lower handle and align the holes.
2. Insert the oval-head bolts into the aligned holes, with the bolt heads on the outside of the handle. (Figure 3).

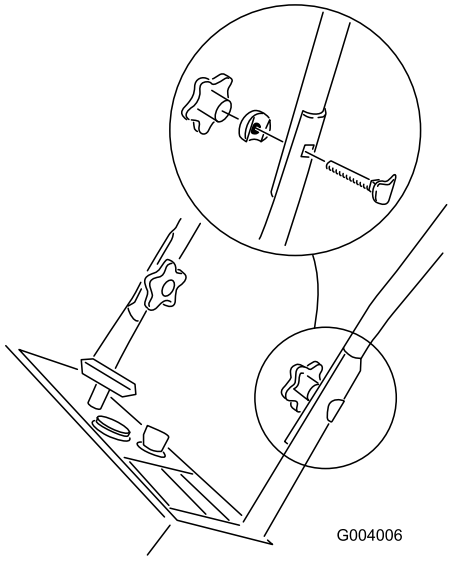

Figure 3

3. Install the curved washers and the handle knobs on the oval-head bolts and **tighten the knobs securely.**

2. Installing the Discharge Chute

1. Position the holes in the sides of the discharge chute over the bolts ends on the sides of the chute handle. (Figure 4).

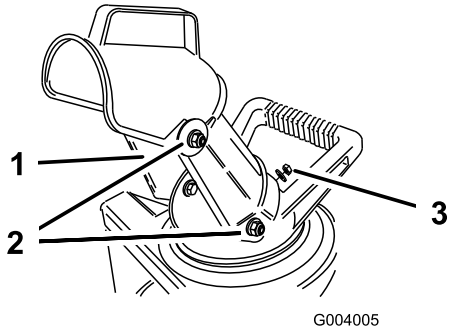

Figure 4

1. Discharge chute
2. Bolt ends
3. Washer and locknut

2. Secure the sides of the discharge chute with 2 washers and 2 locknuts.
3. Rotate the discharge chute to the upright position.
4. Install the washer and locknut **tightly** onto the bolt end at the rear of the discharge chute.

3. Installing the Control Cable

Important: Ensure that the control cable is in the groove of the cable pulley located on the lower left side of the snowthrower (Figure 5).

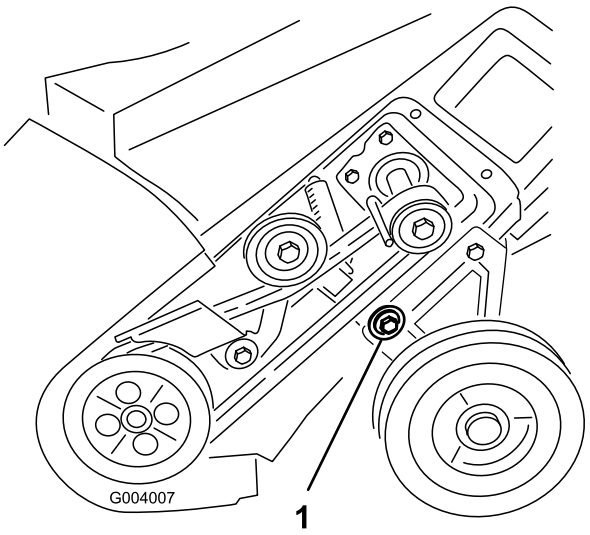

Figure 5

1. Cable pulley

1. Route the control cable through the loop on the left side of the snowthrower housing.
2. Hook the spring into the round hole at the end of the cable adjuster (Figure 6).

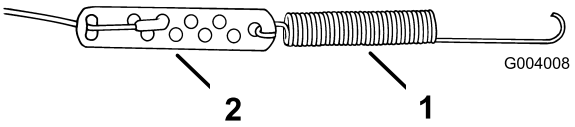

Figure 6

1. Spring
2. Cable adjuster

3. Secure the end of the cable to the cable adjuster.
4. Slide the spring cover over the spring and the cable adjuster and push the spring end through the hole at the end of the spring cover (Figure 7).

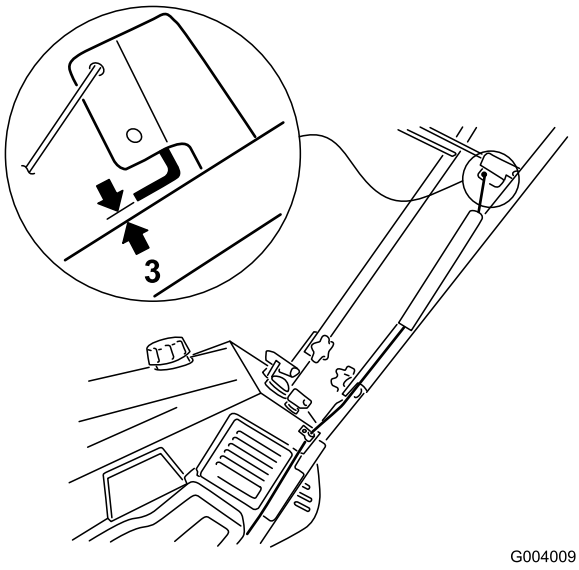

Figure 7

1. Spring cover
2. Control bar bracket
3. 1/16 to 1/8 inch (2 to 3 mm)

5. Hook the spring into the top hole of the control bar bracket (Figure 7).
6. Move the control bar back toward the handle to remove the slack in the cable, and ensure that the gap between the control bar and the handle is 1/16 to 1/8 inch (2 to 3 mm) as shown in Figure 7.
7. To adjust this gap, refer to Adjusting the Control Cable.

Important: The control cable must contain slack when you disengage the control bar.

Product Overview

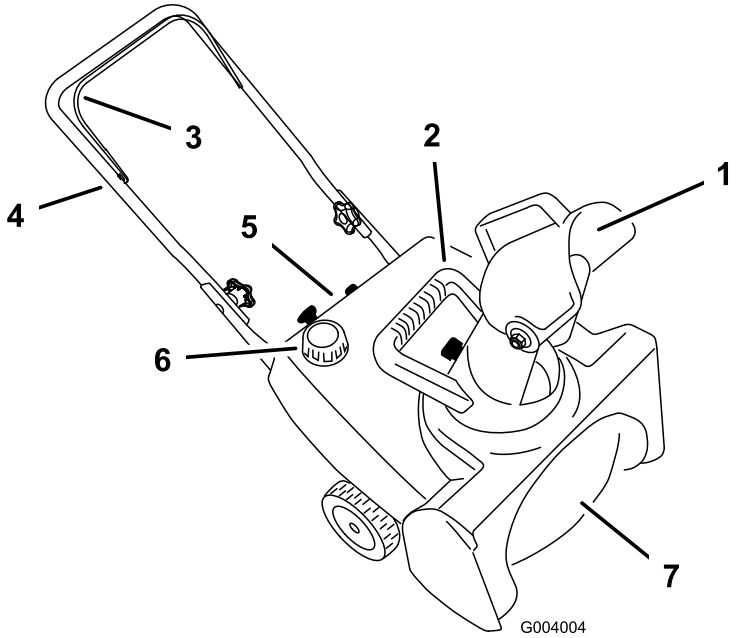

Figure 8

1. Discharge chute
2. Chute handle
3. Control bar
4. Handle
5. Control panel
6. Fuel tank cap
7. Rotor blade

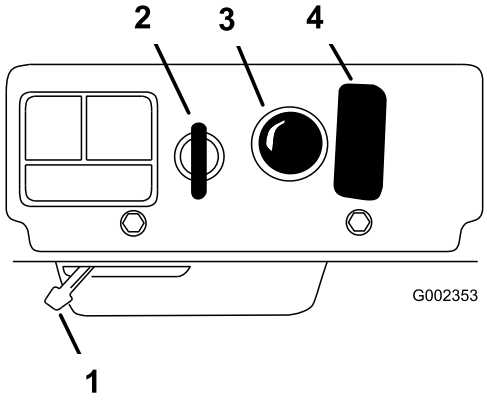

Figure 9

1. Choke lever
2. Key switch
3. Primer
4. Recoil starter

Operation

Note: Determine the left and right sides of the machine from the normal operating position.

Gasoline is extremely flammable and explosive. A fire or explosion from gasoline can burn you and others.

- **To prevent a static charge from igniting the gasoline, place the container and/or snowthrower on the ground before filling, not in a vehicle or on an object.**
- **Fill the tank outdoors when the engine is cold. Wipe up spills.**
- **Do not handle gasoline when smoking or around an open flame or sparks.**
- **Store gasoline in an approved fuel container, out of the reach of children.**

Mixing the Gasoline and Oil

This snowthrower uses a 50:1 gasoline-to-oil mixture. Use **Toro 50:1 2-Cycle Oil (Fuel Stabilizer Added)** or an equivalent high-grade, NMMA TCW-certified two-cycle oil.

Important: To prevent engine damage, do not use automotive oil (such as SAE 30 or 10W30) or fuel mixed at the wrong gasoline-to-oil ratio.

1. Pour a half US gallon (1.9 liters) of fresh, unleaded gasoline into an approved fuel container.
2. Add two-cycle oil to the gasoline according to the chart below (Figure 10):

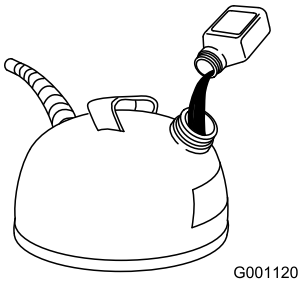

Figure 10

50:1 Gasoline-to-Oil Ratio Mixing Chart	
Gasoline	**Oil**
1 US gallon (3.8 liters)	2.6 ounces (80 ml)
2 US gallons (7.6 liters)	5.2 ounces (160 ml)

3. Install the cap on the fuel container.
4. Shake the container to mix the gasoline and oil thoroughly.
5. Slowly remove the cap and add the remaining amount of gasoline.

   Note: Do not mix gasoline and oil in the fuel tank. Oil at room temperature mixes easier and more thoroughly than cold oil. Oil below 32°F (0°C) requires additional mixing.

Filling the Fuel Tank

Fill the fuel tank with a fresh mixture of gasoline and oil mixed at the proper ratio (Figure 11).

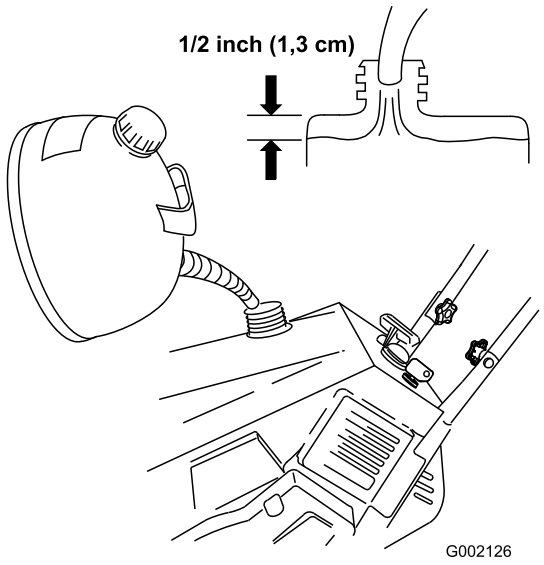

Figure 11

Starting the Engine

1. Turn the ignition key clockwise to the On position.
2. Move the choke lever to the right.
3. Firmly push in the primer 2 times with your thumb, holding the primer in for a second before releasing it each time.
4. Hold the snowthrower handle with one hand and pull the recoil starter vigorously with the other hand.
5. With the engine running, move the choke lever to the left slowly.

Stopping the Engine

To stop the engine, turn the ignition key counterclockwise to the Off position.

Starting the Rotor Blades

To start the rotor blades, hold the control bar against the handle.

Stopping the Rotor Blades

To stop the rotor blades, release the control bar.

Adjusting the Discharge Chute

To adjust the discharge chute, move the chute handle and the chute deflector handle as shown (Figure 12).

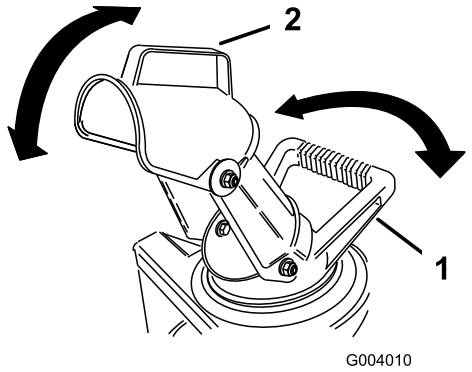

Figure 12

1. Chute handle
2. Chute deflector handle

Preventing Freeze-up after Use

- Let the engine run for a few minutes to prevent moving parts from freezing. Stop the engine, wait for all moving parts to stop, and remove ice and snow from the snowthrower.
- With the engine off, pull the recoil starter handle several times and push the electric start button once (if applicable) to prevent the recoil and electric starters from freezing up.

Operating Tips

The rotor blades can throw stones, toys, and other foreign objects and cause serious personal injury to the operator or to bystanders.

- **Keep the area to be cleared free of all objects that the rotor blades could pick up and throw.**
- **Keep all children and pets away from the area of operation.**

- Remove the snow as soon as possible after it falls.
- To self-propel, raise the handle and tilt the snowthrower slightly forward, lifting the wheels off the ground. The more you tilt the handle forward, the faster the snowthrower self-propels.
- If the snowthrower does not propel itself forward on slippery surfaces or in heavy snow, push forward on the handle, but allow the snowthrower to work at its own pace.
- Overlap each swath to ensure complete snow removal.
- Discharge the snow downwind whenever possible.
- In snowy and cold conditions, some controls and moving parts may freeze. **Do not use excessive force when trying to operate frozen controls.** If you have difficulty operating any control or part, start the engine and let it run for a few minutes.

Maintenance

Note: Determine the left and right sides of the machine from the normal operating position.

Recommended Maintenance Schedule(s)

Maintenance Service Interval	Maintenance Procedure
After the first operating hour	• Check for loose fasteners and tighten them if necessary.
Yearly	• Have an Authorized Service Dealer replace the rotor blades and the scraper if necessary. • Have an Authorized Service Dealer inspect the drive belt and replace it if necessary. • Have an Authorized Service Dealer inspect the spark plug and replace it if necessary. • Check for loose fasteners and tighten them if necessary.
Yearly or before storage	• Prepare the snowthrower for storage.

Important: Refer to your engine operator's manual for additional maintenance procedures.

Adjusting the Control Cable

1. Stop the engine and wait for all moving parts to stop.
2. Move the control bar toward the handle to remove the slack in the control cable.
3. Ensure that there is a 1/16 to 1/8-inch (2 to 3 mm) gap between the control bar and the handle (Figure 13). If you must adjust the control cable, go to step 4.

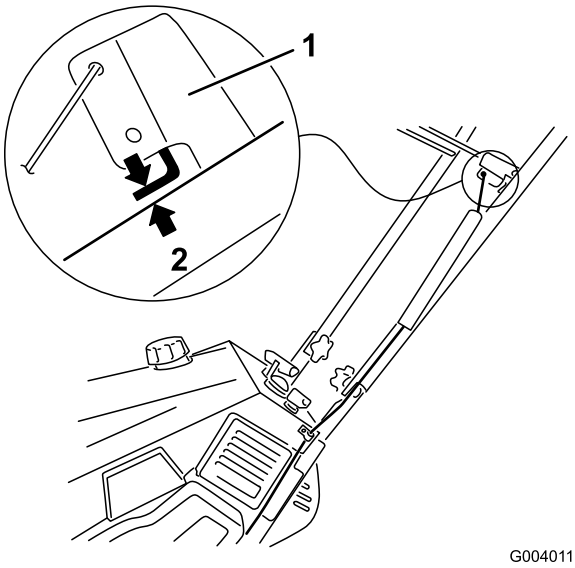

Figure 13

1. Control bar bracket
2. Handle

Important: The control cable must contain slack when you disengage the control bar.

4. Unhook the spring end from the top hole in the control bar bracket.
5. Slide the spring cover off the spring and the cable adjuster.
6. Unhook the Z-fitting from the cable adjuster and insert it into the appropriate hole to obtain a 1/16 to 1/8 inch (2 to 3 mm) gap between the control bar bracket and the handle (Figure 14).

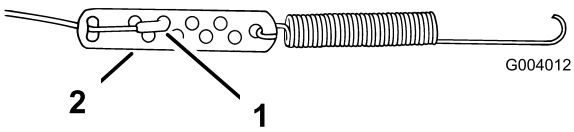

Figure 14

1. Z-fitting
2. Cable adjuster

7. Install the spring cover over the cable adjuster and spring.
8. Hook the spring into the top hole of the control bar bracket.
9. Check the gap and adjust it again if necessary.

Inspecting the Rotor Blades

Before each season, inspect the rotor blades for wear. When a rotor blade edge has worn down to the wear indicator hole, have an Authorized Service Dealer replace both rotor blades and the scraper (Figure 15).

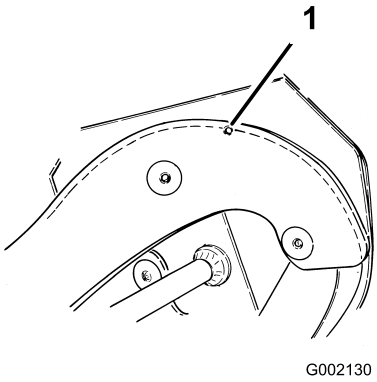

Figure 15

1. Wear indicator hole

Inspecting the Scraper

Before each season, inspect the scraper for wear. If the thickness from the top of the wear indicator groove to the bottom of the scraper is less than 1/16 inch (1.6 mm) or there is no longer a wear indicator groove, replace the scraper (Figure 16).

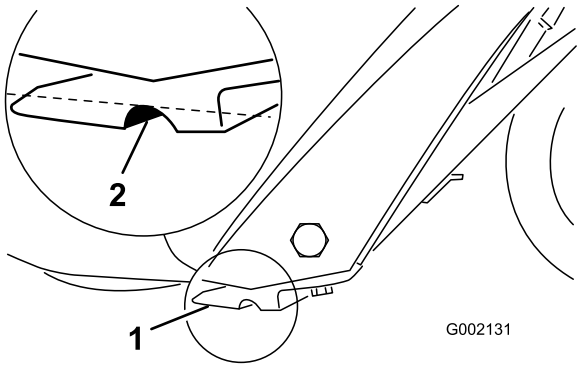

Figure 16

1. Scraper
2. Wear indicator groove

Storage

Storing the Snowthrower

Gasoline fumes are highly flammable, explosive, and dangerous if inhaled. If you store the product in an area with an open flame, the gasoline fumes may ignite and cause an explosion.

Do not store the snowthrower in a house (living area), basement, or any other area where ignition sources may be present, such as hot water and space heaters, clothes dryers, furnaces, and other like appliances.

Important: Store the snowthrower in its operating position and on its wheels. Storing the snowthrower on its front housing may cause hard starting.

1. Add a fuel stabilizer/conditioner to the fuel in the fuel tank as directed.

   Note: If you use Toro 50:1 2-Cycle Oil (Fuel Stabilizer Added), you do not need to add a fuel stabilizer/conditioner.

2. Run the engine for 5 minutes to distribute the conditioned fuel through the fuel system.
3. Stop the engine and allow it to cool.
4. Use a hand pump to pump the fuel from the fuel tank into an approved fuel container, or run the engine until it stops.
5. Start the engine and run it until it stops.
6. Choke or prime the engine, start it a third time, and run the engine until it will not start.
7. Slowly pull the recoil starter until you feel resistance due to compression pressure, then stop.
8. Release the starter tension gradually by allowing the rope to go back slowly to prevent the engine from reversing due to compression pressure.
9. Dispose of unused fuel properly. Recycle it according to local codes, or use it in your automobile.

   Note: Do not store stabilized fuel for more than 90 days.

10. Tighten all loose screws, bolts, and locknuts. Repair or replace any damaged parts.
11. Clean the snowthrower thoroughly.
12. Cover the snowthrower and store it in a clean, dry place out of the reach of children. Allow the engine to cool before storing it in any enclosure.

Folding the Handle

1. Remove the locknut from the rear of the discharge chute.
2. Fold the discharge chute down and install the locknut tightly onto the bolt at the rear of the discharge chute handle (Figure 17).

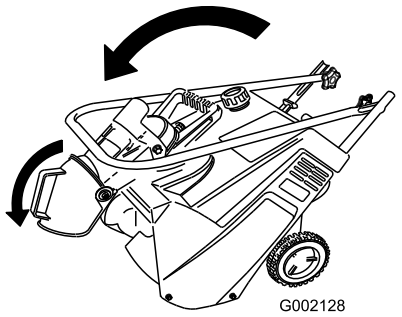

Figure 17

3. Loosen the knobs on the handle and fold the handle down over the snowthrower.

   Note: You can carry the folded snowthrower by its discharge chute handle.

International Distributor List—Consumer Products

Distributor:	Country:	Phone Number:
Atlantis Su ve Sulama Sisstemleri Lt	Turkey	90 216 344 86 74
Balama Prima Engineering Equip	Hong Kong	852 2155 2163
B-Ray Corporation	Korea	82 32 551 2076
Casco Sales Company	Puerto Rico	787 788 8383
Ceres S.A	Costa Rica	506 239 1138
CSSC Turf Equipment (pvt) Ltd	Sri Lanka	94 11 2746100
Cyril Johnston & Co	Nothern Ireland	44 2890 813 121
Equiver	Mexico	52 55 539 95444
Femco S.A.	Guatemala	502 442 3277
G.Y.K. Company ltd.	Japan	81 726 325 861
Geomechaniki of Athens	Greece	30 10 935 0054
Guandong Golden Star	China	86 20 876 51338
Hako Gorund and Garden	Sweden	46 35 10 0000
Hydroturf Int. Co	Dubai United Arab Emirates	97 14 347 9479
Hydroturf Egypt LLC	Egypt	202 519 4308
Ibea S.p.A.	Italy	39 0331 853611
Irriamc	Portugal	351 21 238 8260
Jean Heybroek b.v.	Netherlands	31 30 639 4611
Lely (U.K.) Limited	United Kingdom	44 1480 226 800
Maquiver S.A.	Columbia	57 1 236 4079
Maruyama Mfg. Co. Inc.	Japan	81 3 3252 2285
Metra Kft	Hungary	36 1 326 3880
Mountfield a.s.	Czech Republic	420 255 704 220
Munditol S.A.	Argentina	54 11 4 821 9999
Oslinger Turf Equipment SA	Ecuador	593 4 239 6970
Oy Hako Ground and Garden Ab	Finland	358 987 00733
Parkland Products Ltd	New Zealand	64 3 34 93760
Prochaska & Cie	Austria	43 1 278 5100
RT Cohen 2004 Ltd	Israel	972 986 17979
Riversa	Spain	34 9 52 83 7500
Roth Motorgerate GmBh & Co	Germany	49 7144 2050
Sc Svend Carlsen A/S	Denmark	45 66 109 200
Solvert S.A.S	France	33 1 30 81 77 00
Spypros Stavrinides Limited	Cyprus	357 22 434131
Surge Systems India Limited	India	91 1 292299901
T-Markt Logistics Ltd	Hungary	36 26 525 500
Toro Australia	Australia	61 3 9580 7355
Toro Europe BVBA	Belgium	32 14 562 960

The Toro Warranty

Conditions and Products Covered

The Toro® Company and its affiliate, Toro Warranty Company, pursuant to an agreement between them, jointly promises to the original purchaser* to repair any Toro Product used for normal residential purposes* if defective in materials or workmanship. The following time periods apply from the date of original purchase:

Products	Warranty Period
Walk Power Mowers	2-year limited warranty
Rear Engine Riders	2-year limited warranty
Lawn & Garden Tractors	2-year limited warranty
Electric Hand Held Products	2-year limited warranty
Snowthrowers	2-year limited warranty
Consumer Zero Turn	2-year limited warranty

* "Original purchaser" means use the person who originally purchased Toro products.

* "Normal residential purposes"means use of the product on the same lot as your home. Use at more than one location is considered commercial use, and the commercial use warranty would apply.

Limited Warranty for Commercial Use

Toro Consumer Products and attachments used for commercial, institutional, or rental use are warranted against defects in materials or workmanship for the following time periods from the date of original purchase:

Products	Warranty Period
Walk Power Mowers	90 day warranty
Rear Engine Riders	90 day warranty
Lawn & Garden Tractors	90 day warranty
Electric Hand Held Products	90 day warranty
Snowthrowers	90 day warranty
Consumer Zero Turn	45 day warranty

Instructions for Obtaining Warranty Service

If you think that your Toro Product contains a defect in materials or workmanship, follow this procedure:

1. Contact your seller to arrange service of the product. If for any reason it is impossible for you to contact your seller, you may contact any Toro Authorized Distributor to arrange service.
2. Bring the product and your proof of purchase (sales receipt) to your seller or the Service Dealer.

If for any reason you are dissatisfied with the Service Dealer's analysis or with the assistance provided, contact the Toro importer or contact us at:

Customer Care Department, Consumer Division
Toro Warranty Company
8111 Lyndale Avenue South
Bloomington, MN 55420-1196
Manager: Technical Product Support: 001-952-887-8248

See attached Distributor List

Owner Responsibilities

You must maintain your Toro Product by following the maintenance procedures described in the operator's manual. Such routine maintenance, whether performed by a dealer or by you, is at your expense.

Items and Conditions Not Covered

This express warranty does not cover:

- Cost of regular maintenance service or parts, such as filters, fuel, lubricants, tune-up parts, blade sharpening, brake and clutch adjustments.
- Any product or part which has been altered or misused or required replacement or repair due to normal wear, accidents, or lack of proper maintenance.
- Repairs necessary due to improper fuel, contaminants in the fuel system, or failure to properly prepare the fuel system prior to any period of non-use over three months.
- Engine and transmission. These are covered by the appropriate manufacturer's guarantees with separate terms and conditions.

All repairs covered by this warranty must be performed by an Authorized Toro Service Dealer using Toro approved replacement parts.

General Conditions

The purchaser is covered by the national laws of each country. The rights to which the purchaser is entitled with the support of these laws are not restricted by this warranty.