Form No. 3356-435 Rev A

TORO®

Count on it.

Operator's Manual

Debris Blower

for Groundsmaster® 7200/7210 Traction Unit

Model No. 30393—Serial No. 270000001 and Up

Introduction

Read this information carefully to learn how to operate and maintain your product properly and to avoid injury and product damage. You are responsible for operating the product properly and safely.

You may contact Toro directly at www.Toro.com for product and accessory information, help finding a dealer, or to register your product.

Whenever you need service, genuine Toro parts, or additional information, contact an Authorized Service Dealer or Toro Customer Service and have the model and serial numbers of your product ready. Figure 1 identifies the location of the model and serial numbers on the product. Write the numbers in the space provided.

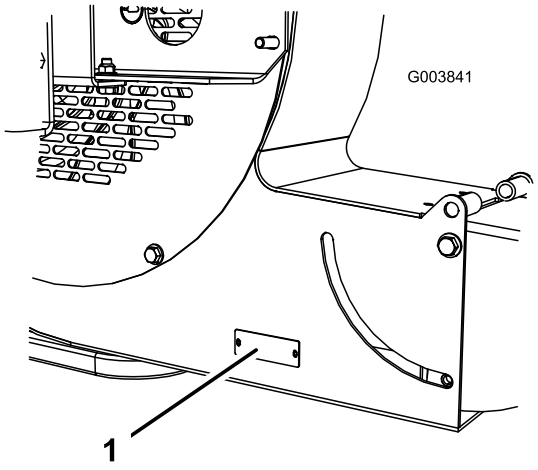

Figure 1

1. Model and serial number location

Model No. _____

Serial No. _____

This manual identifies potential hazards and has safety messages identified by the safety alert symbol (Figure 2), which signals a hazard that may cause serious injury or death if you do not follow the recommended precautions.



Figure 2

1. Safety alert symbol

This manual uses 2 other words to highlight information. **Important** calls attention to special mechanical information and **Note** emphasizes general information worthy of special attention.

Contents

Introduction 2
Safety 3
- Before Operating 3
- While Operating 3
- Maintenance 3
- Safety and Instructional Decals 4

Setup 6
- 1 Mounting the Castor Wheel 6
- 2 Mounting the Debris Blower to the Traction Unit 6
- 3 Adjusting the Link Assembly 8
- 4 Grease the Blower 8
- 5 Install Front Weight 8

Operation 11
- Adjust Discharge Opening 11
- Switch Operation 11
- Operating Tips 11

Maintenance 13
- Lubrication 13
- Bearing Alignment 13
- Torquing Fasteners 14
- Servicing the Castor Arm Bushings 14
- Servicing the Castor Wheels and Bearings 15

© 2007—The Toro® Company
8111 Lyndale Avenue South
Bloomington, MN 55420

Contact us at www.Toro.com.
Printed in the USA.
All Rights Reserved

Safety

Hazard control and accident prevention are dependent upon the awareness, concern, and proper training of the personnel involved in the operation, transport, maintenance, and storage of the machine. Improper use or maintenance of the machine can result in injury or death. To reduce the potential for injury or death, comply with the following safety instructions.

Before Operating

- Read and understand the contents of this Operator's Manual before operating the machine. Become familiar with all of the controls and know how to stop quickly. A free replacement manual is available by sending the complete Model and Serial Number to The Toro® Company, 8111 Lyndale Avenue South, Bloomington, Minnesota 55420-1196.
- Never allow children to operate the machine. Do not allow adults to operate machine without proper instruction. Only trained operators who have read this manual should operate this machine.
- Never operate the machine when under the influence of drugs or alcohol.
- Keep all bystanders away from the operating area.
- Keep all shields and safety devices in place. If a shield, safety device, or decal is illegible or damaged, repair or replace it before operation is commenced. Also tighten any loose nuts, bolts, and screws to ensure that the machine is in safe operating condition.
- Do not operate the machine while wearing sandals, tennis shoes, sneakers, or shorts. Also, do not wear loose fitting clothing which could get caught in moving parts. Always wear long pants and substantial shoes. Wearing safety glasses, safety shoes, and a helmet is advisable and required by some local ordinances and insurance regulations.

While Operating

- Do not run the engine in a confined area without adequate ventilation. Exhaust fumes are hazardous and could possibly be deadly.
- The maximum seating capacity is one person. Never carry passengers.
- Sit on the seat when starting the engine and operating the machine.
- This product may exceed noise levels of 90 dB(A) at the operator position. Hearing protection is recommended for prolonged exposure to reduce the potential of permanent hearing damage.
- Using the machine demands attention. To prevent loss of control:
  - Operate only in daylight or when there is good artificial light.
  - Drive slowly and watch for holes or other hidden hazards.
  - Do not drive close to a sand trap, ditch, creek, or other hazard.
  - Reduce your speed when making sharp turns and when turning on hillsides.
  - Avoid sudden starts and stops.
  - Before backing up, look to the rear and ensure that no one is behind the machine.
  - Watch out for traffic when near or crossing roads. Always yield the right-of-way.
- Stay away from the discharge opening when the machine is operating. Keep all bystanders away from the discharge opening and don't direct discharge toward bystanders.
- If the engine stalls or the machine loses headway and cannot make it to the top of a slope, do not turn the machine around. Always back slowly straight down the slope.
- **Do not take an injury risk!** When a person or pet appears unexpectedly in or near the operating area, **stop operation.** Careless operation, combined with terrain angles, ricochets, or improperly positioned guards can lead to thrown object injuries. Do not resume operation until the area is cleared.
- Do not touch the engine or muffler while the engine is running or soon after it is stopped. These areas could be hot enough to cause a burn.

Maintenance

- Remove the key from the ignition switch to prevent accidental starting of the engine when servicing, adjusting, or storing the machine.
- Perform only those maintenance instructions described in this manual. If major repairs are ever needed or assistance is desired, contact an Authorized Toro Distributor.
- To reduce a potential fire hazard, keep the engine free of excessive grease, grass, leaves, and accumulations of dirt. Never wash a warm engine or any electrical parts with water.

- Be sure that the machine is in safe operating condition by keeping nuts, bolts, and screws tight. Check the fan shaft bearing mounting bolts and nuts frequently to be sure that they are tightened to specification.
- Make sure that all hydraulic line connectors are tight and all hydraulic hoses and lines are in good condition before applying pressure to the system.
- Keep your body and hands away from pin hole leaks in hydraulic lines that eject high pressure hydraulic fluid. Use cardboard or paper to find hydraulic leaks. Hydraulic fluid escaping under pressure can penetrate skin and cause injury. Fluid accidentally injected into the skin must be surgically removed within a few hours by a doctor familiar with this form of injury or gangrene may result.
- Before disconnecting or performing any work on the hydraulic system, all pressure in the system must be relieved by stopping the engine and lowering the blower to the ground.
- If the engine must be running to perform a maintenance adjustment, keep hands, feet, clothing, and other parts of the body away from the fan and other moving parts.
- Do not overspeed the engine by changing the governor settings. To be sure of safety and accuracy, have an Authorized Toro Distributor check the maximum engine speed with a tachometer.
- The engine must be shut off before checking the oil or adding oil to the crankcase.
- To ensure optimum performance and safety, always purchase genuine Toro replacement parts and accessories to keep the machine all Toro. **Never use "will-fit" replacement parts and accessories made by other manufacturers.** Look for the Toro logo to ensure genuineness. Using unapproved replacement parts and accessories could void the warranty.

Safety and Instructional Decals

Safety decals and instructions are easily visible to the operator and are located near any area of potential danger. Replace any decal that is damaged or lost.

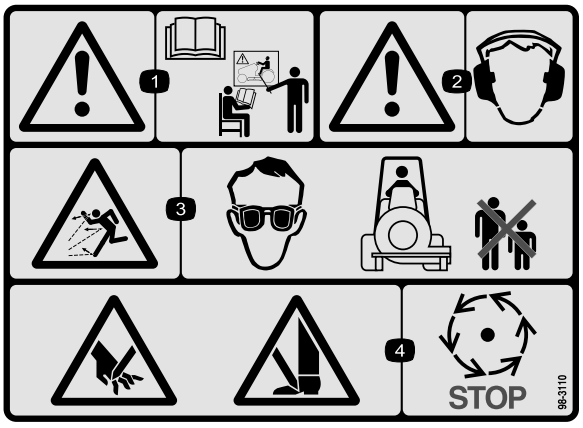

98-3110

1. Warning—read the *Operator's Manual* and receive training.
2. Warning—wear hearing protection.
3. Thrown object hazard—wear eye protection and keep bystanders a safe distance from the machine.
4. Cutting hazard of hand or foot—wait for moving parts to stop.

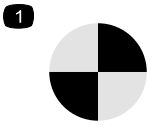

98-3111

1. Point of rotation

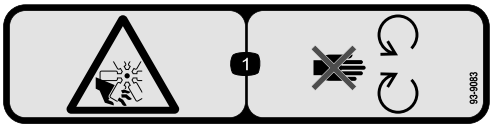

93-9083

1. Cutting/dismemberment hazard, fan—stay away from moving parts.



58-6520

1. Grease



106-5517

1. Warning—do not touch the hot surface.

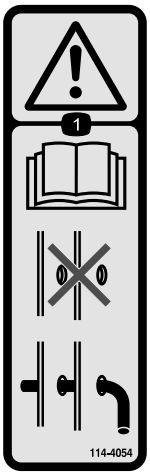

114-4054

1. Warning—read the *Operator's Manual*, do not operate the machine without the cross pin in place.

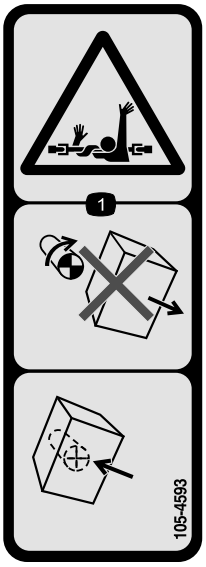

105-4593

1. Entanglement hazard, shaft—do not remove cover while parts are moving, keep all guards in place.

Setup

Loose Parts

Use the chart below to verify that all parts have been shipped.

Procedure	Description	Qty.	Use
1	Castor wheel assembly	1	Mount the castor wheel to the debris blower
2	Debris blower assembly Locking pin Hair pin cotter	1 1 1	Mount the debris blower to the traction unit
3	No parts required	–	Adjust the link assembly
4	No parts required	–	Grease the blower

Media and Additional Parts

Description	Qty.	Use
Parts Catalog Operator's Manual	1 1	Read before operating.

Note: Determine the left and right sides of the machine from the normal operating position.

Note: To install and operate the debris blower, the traction unit must be equipped with the Rear Quick Attach System, Model 30377 and the Auxiliary Hydraulic Power Kit, Model 30380.

1

Mounting the Castor Wheel

Parts needed for this procedure:

1	Castor wheel assembly

Procedure

1. Remove the tensioning cap from the castor wheel spindle shaft (Figure 3). Slide the spacer and one thrust washer off the spindle shaft. Leave one thrust washer on the shaft.

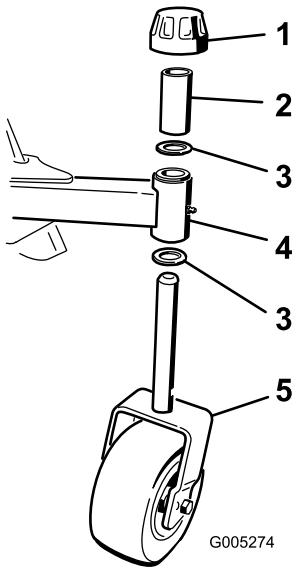

Figure 3

1. Tensioning cap
2. Spacer
3. Thrust washer (2)
4. Blower frame castor tube
5. Castor wheel

2. Push the castor spindle up through the bushings in the blower frame, insert another thrust washer onto the shaft, slide the spacer onto the spindle shaft and install the tensioning cap to secure the assembly (Figure 3).
3. Make sure the castor wheel assembly tire is inflated to 35 to 50 psi.

2

Mounting the Debris Blower to the Traction Unit

Parts needed for this procedure:

1	Debris blower assembly
1	Locking pin
1	Hair pin cotter

Procedure

1. Remove any attachment from the rear of the machine.
2. Back the traction unit into position behind the attachment adapter.

   Note: Make sure the locking lever (Figure 4) is pivoted to the left (unlocked position) as viewed from the rear of the machine.

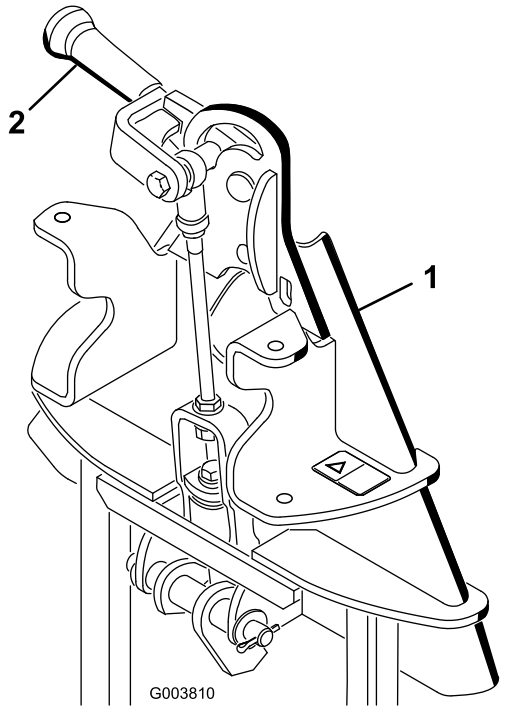

Figure 4

1. Attachment adapter
2. Locking lever (locked position)

3. Raise the traction unit adapter into the attachment adapter.
4. Pivot the locking lever to the right to lock the adapters together.
5. Insert the locking pin through the adapters and secure with a hairpin cotter (Figure 5).

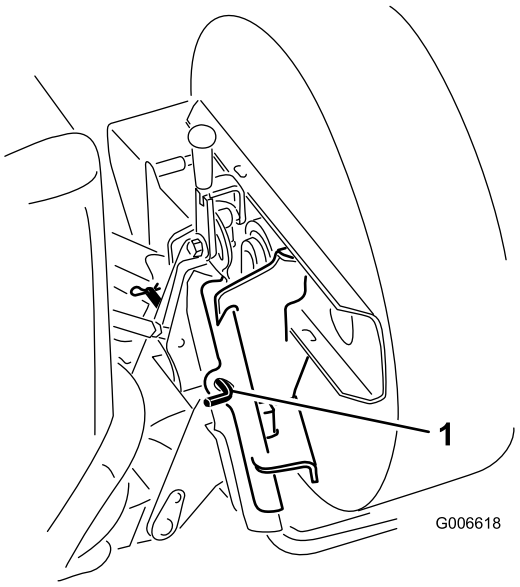

Figure 5

1. Locking pin

6. Route the hoses through the hose support loop.
7. Remove the dust plugs from the hydraulic couplers and make sure couplers are free of any dirt or contamination.
8. Connect the attachment hydraulic hose couplers to the hydraulic couplers on the traction unit rear auxiliary hydraulic power kit.

   Important: Whenever the hydraulic hose couplers are disconnected, make sure the dust plugs are cleaned and then installed to prevent contamination from entering either hydraulic system.

3

Adjusting the Link Assembly

No Parts Required

Procedure

1. With the debris blower mounted and secured on the traction unit, raise the attachment.
2. Measure the gap between the top washer and the spacer in the link assembly on the attachment adapter as shown in Figure 6.

   Note: The gap between the washer and the shoulder should be 0.060 to 0.080 inch

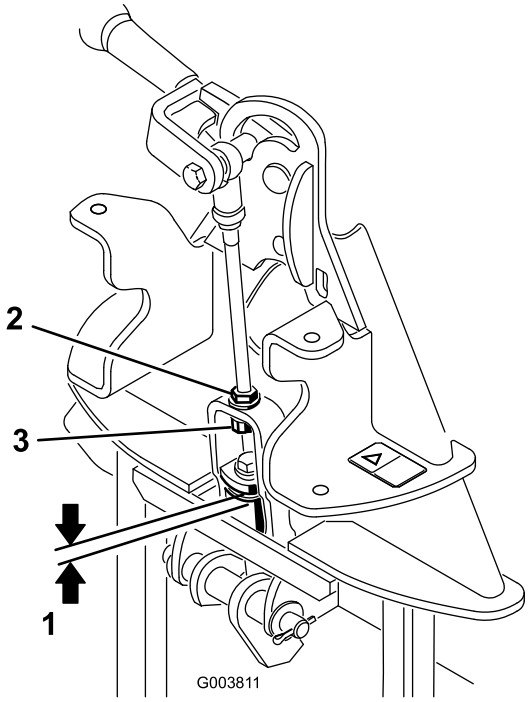

Figure 6

1. 0.060 to 0.080 inch gap
2. Jam nut
3. Adjustment nut

4

Grease the Blower

No Parts Required

Procedure

Before the Debris Blower is operated, it must be greased to assure proper lubrication. Refer to Lubrication section of manual. Failure to properly grease the unit will result in premature failure of critical parts.

5

Install Front Weight

No Parts Required

Procedure

When an attachment is not installed on the machine, loose weights must be removed. Never operate the machine with no attachment installed and front weights on the machine

Use the following weight charts to determine the correct amount of front weight required for your machine.

72" width of cut **GM7200 & GM7210 with NO Hard Canopy** (model 30359) Models 30360, 30361, 30363, & 30364	**Additional Front Weight Required**	**Weight Part Number**	**Weight Description**	**Qty**
Rear QAS and no attachment (Model 30377)	0 lb.	n/a		
QAS Finish Grader (Box Rake) (Model 08754)	0 lb.	n/a		
Steel Drag Mat (Model 08757)	0 lb.	n/a		
Tooth Rake (Model 08751)	0 lb.	n/a		
Tooth Rake With Spring Rake (Model 08752)	0 lb.	n/a		
Coco Drag Mat (Model 08758)	67 lb.	114-4090 **&** 114-4096	Front Weight Bracket **&** 42 lb. front Weight	1 1
QAS Nail Drag (Model 08761)	67 lb.	114-4090 **&** 114-4096	Front Weight Bracket **&** 42 lb. front Weight	1 1
QAS Debris Blower (Model 08759)	109 lb.	114-4090 **&** 114-4096	Front Weight Bracket **&** 42 lb. front Weight	1 2
Rahn Groomer (Allied Product)	109 lb.	114-4090 **&** 114-4096	Front Weight Bracket **&** 42 lb. front Weight	1 2
72" width of cut **GM7200 & GM7210 with Hard Canopy** (model 30359) Models 30360, 30361, 30363, & 30364	**Additional Front Weight Required**	**Weight Part Number**	**Weight Description**	**Qty**
Rear QAS and no attachment (Model 30377)	0 lb.			
QAS Finish Grader (Box Rake) (Model 08754)	25 lb.	114-4090 **OR** Model 30374	Front Weight Bracket **OR** Jack Stand Kit	1 1
Steel Drag Mat (Model 08757)	25 lb.	114-4090 **OR** Model 30374	Front Weight Bracket **OR** Jack Stand Kit	1 1
Tooth Rake (Model 08751)	25 lb.	114-4090 **OR** Model 30374	Front Weight Bracket **OR** Jack Stand Kit	1 1
Tooth Rake With Spring Rake (Model 08752)	25 lb.	114-4090 **OR** Model 30374	Front Weight Bracket **OR** Jack Stand Kit	1 1
Coco Drag Mat (Model 08758)	109 lb.	114-4090 **&** 114-4096	Front Weight Bracket **&** 42 lb. front Weight	1 2
QAS Nail Drag (Model 08761)	109 lb.	114-4090 **&** 114-4096	Front Weight Bracket **&** 42 lb. front Weight	1 2
QAS Debris Blower (Model 08759)	151 lb.	114-4090 **&** 114-4096	Front Weight Bracket **&** 42 lb. front Weight	1 3
Rahn Groomer (Allied Product)	151 lb.	114-4090 **&** 114-4096	Front Weight Bracket **&** 42 lb. front Weight	1 3

G006619

Figure 7

62" width of cut **GM7200 & GM7210 with NO Hard Canopy** (model 30359) Models 30362 & 30365	**Additional Front Weight Required**	**Weight Part Number**	**Weight Description**	**Qty**
Rear QAS and no attachment (Model 30377)	67 lb.	114-4090 & 114-4096	Front Weight Bracket & 42 lb. front Weight	1 1
QAS Finish Grader (Box Rake) (Model 08754)	151 lb.	114-4090 & 114-4096	Front Weight Bracket & 42 lb. front Weight	1 3
Steel Drag Mat (Model 08757)	151 lb.	114-4090 & 114-4096	Front Weight Bracket & 42 lb. front Weight	1 3
Tooth Rake (Model 08751)	109 lb.	114-4090 & 114-4096	Front Weight Bracket & 42 lb. front Weight	1 2
Tooth Rake With Spring Rake (Model 08752)	151 lb.	114-4090 & 114-4096	Front Weight Bracket & 42 lb. front Weight	1 3
Coco Drag Mat (Model 08758)	151 lb.	114-4090 & 114-4096	Front Weight Bracket & 42 lb. front Weight	1 3
QAS Nail Drag (Model 08761)	151 lb.	114-4090 & 114-4096	Front Weight Bracket & 42 lb. front Weight	1 3
QAS Debris Blower (Model 08759)	151 lb.	114-4090 & 114-4096	Front Weight Bracket & 42 lb. front Weight	1 3
Rahn Groomer (Allied Product)	151 lb.	114-4090 & 114-4096	Front Weight Bracket & 42 lb. front Weight	1 3
62" width of cut **GM7200 & GM7210 with Hard Canopy** (model 30359) Models 30362 & 30365	**Additional Front Weight Required**	**Weight Part Number**	**Weight Description**	**Qty**
Rear QAS and no attachment (Model 30377)	109 lb.	114-4090 & 114-4096	Front Weight Bracket & 42 lb. front Weight	1 2
QAS Finish Grader (Box Rake) (Model 08754)	193 lb.	114-4090 & 114-4096	Front Weight Bracket & 42 lb. front Weight	1 3
Steel Drag Mat (Model 08757)	193 lb.	114-4090 & 114-4096	Front Weight Bracket & 42 lb. front Weight	1 4
Tooth Rake (Model 08751)	151 lb.	114-4090 & 114-4096	Front Weight Bracket & 42 lb. front Weight	1 3
Tooth Rake With Spring Rake (Model 08752)	193 lb.	114-4090 & 114-4096	Front Weight Bracket & 42 lb. front Weight	1 4
Coco Drag Mat (Model 08758)	193 lb.	114-4090 & 114-4096	Front Weight Bracket & 42 lb. front Weight	1 4
QAS Nail Drag (Model 08761)	193 lb.	114-4090 & 114-4096	Front Weight Bracket & 42 lb. front Weight	1 4
QAS Debris Blower (Model 08759)	193 lb.	114-4090 & 114-4096	Front Weight Bracket & 42 lb. front Weight	1 4
Rahn Groomer (Allied Product)	193 lb.	114-4090 & 114-4096	Front Weight Bracket & 42 lb. front Weight	1 4

G006620

Figure 8

Operation

Adjust Discharge Opening

The discharge opening (Figure 9) is adjustable to direct the air flow from the blower.

1. Loosen discharge opening deflector mounting screws (Figure 9).

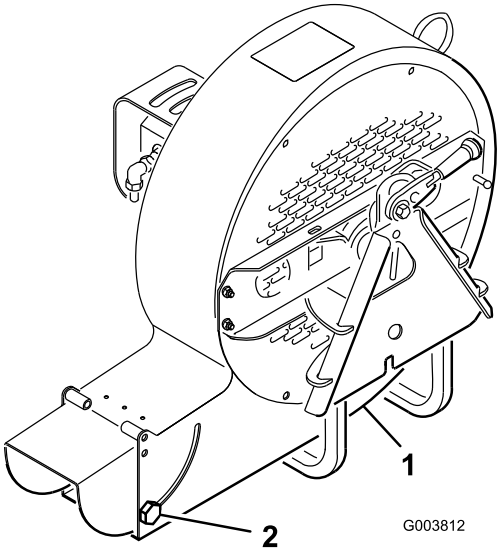

Figure 9

1. Discharge opening deflector
2. Mounting screw

2. Pivot deflector to desired opening.
3. Tighten mounting screws.

Switch Operation

Lift/Lower Switch (Figure 10) — Move switch to Lift to raise attachment and to Lower to lower attachment.

Float/Power Down Switch (Figure 10) — Moving the switch to Float allows the attachment to follow the contour of the ground. Moving the switch to Power Down will add weight from the machine to increase ground engagement force. Higher ground engagement force will decrease the traction capacity of the machine.

Important: Only run the debris blower in the FLOAT mode. Never run in the Power Down mode or damage to the blower will occur.

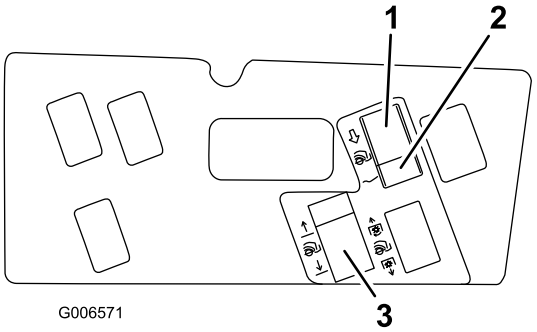

Figure 10

1. Float
2. Power down
3. Lift/Lower

Operating Tips

Discharged air has considerable force and could cause injury or loss of footing.

- **Stay away from discharge opening when machine is operating.**
- **Keep bystanders away from discharge opening when machine is running.**

- Practice blowing material. It is advisable to blow the same direction the wind is blowing to prevent material from blowing back into the cleared area.
- Do not climb curbs with the debris blower mounted to the machine. Always find a ramp.

Note: If the attachment adapter becomes stuck to the traction unit adapter, insert a prybar/screwdriver into the pry slot to disengage the parts (Figure 11).

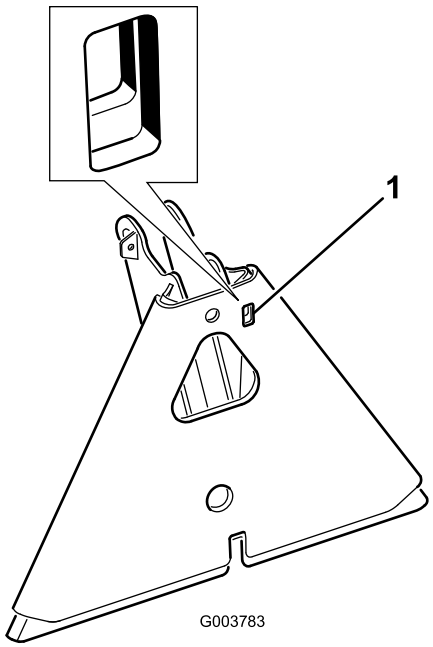

Figure 11

1. Pry slot

Maintenance

Lubrication

The debris blower has bearings and bushings that must be lubricated regularly.. If the machine is operated under normal conditions, lubricate bearings with No. 2 general purpose lithium base grease after every 8 hours of operation or daily, whichever comes first. Lubricate fittings immediately after every washing, regardless of the interval listed.

The lubrication points and quantities are as follows:

Fan shaft–2 (Figure 12)

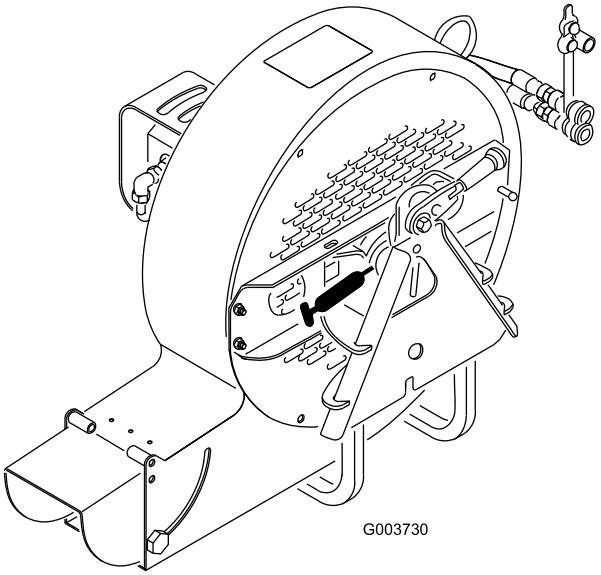

Figure 12

Castor arm tube (Figure 13)

Castor wheel (Figure 13)

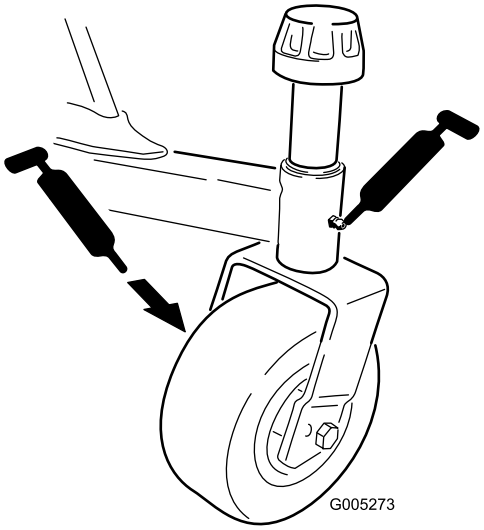

Figure 13

Greasing the Attachment Adapter

If the locking lever on the attachment adapter does not pivot freely and easily, apply a light coat of grease to the area shown in Figure 14.

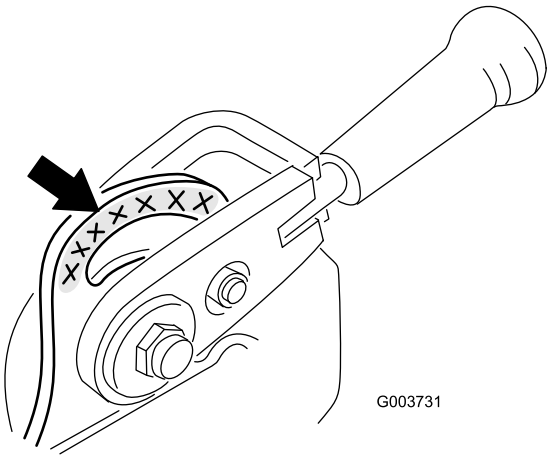

Figure 14

Bearing Alignment

If the motor mounting brackets are ever removed, they must be re–aligned before the debris blower is operated. Refer to the Part Catalog for the Alignment Tool part number.

1. Make sure the mounting brackets are installed to the blower housing but capscrews and nuts are loose (Figure 15).

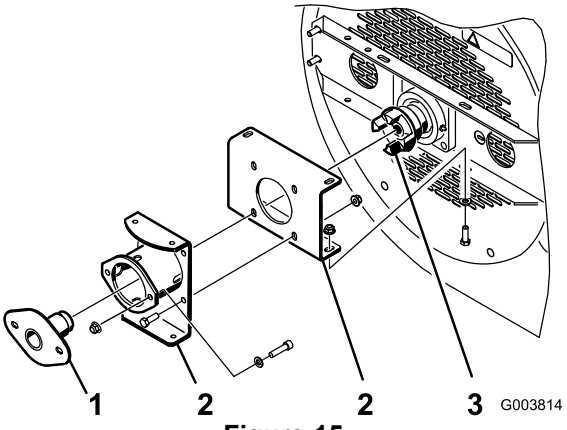

Figure 15

1. Alignment tool
2. Mounting bracket
3. Fan coupler

2. Insert the bearing alignment tool through the mounting brackets and into the fan coupler (Figure 15). Make sure the spider coupler (Figure 16) is not in the coupler.

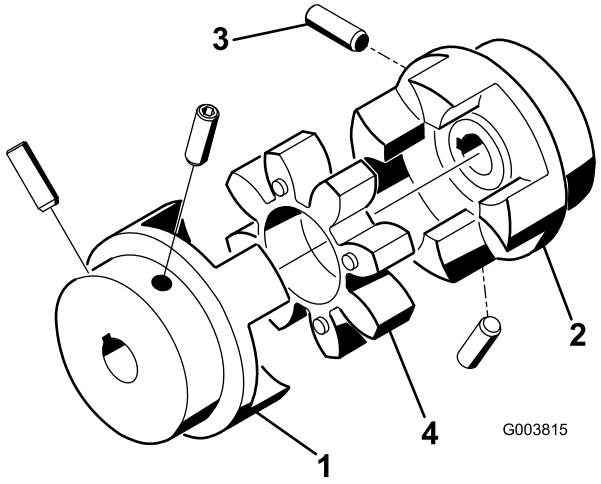

Figure 16

1. Motor coupler
2. Fan coupler
3. Set screw (2 each)
4. Coupler spider

3. Tighten the capscrews and nuts securing the mounting brackets together and to the blower housing.
4. Remove the alignment tool and finish assembly.

Torquing Fasteners

If the blower is ever disassembled, the following fasteners must be torqued as specified. Also, apply Loctite 242 to the threads before installing.

- The set screws securing the motor and fan shaft couplers (Figure 16) must be torqued to 58 to 82 in–lb.
- The fan shaft bearing set screws (Figure 17) must be torqued to 58 to 82 in–lb.

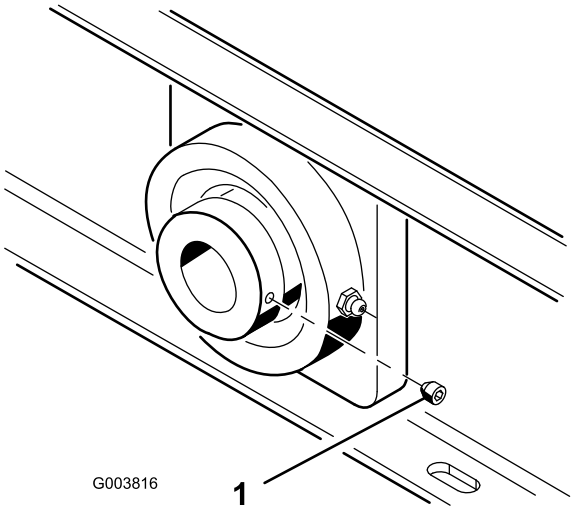

Figure 17

1. Set screw

- The fan mounting nut (Figure 18) must be torqued to 500 ft–lb.

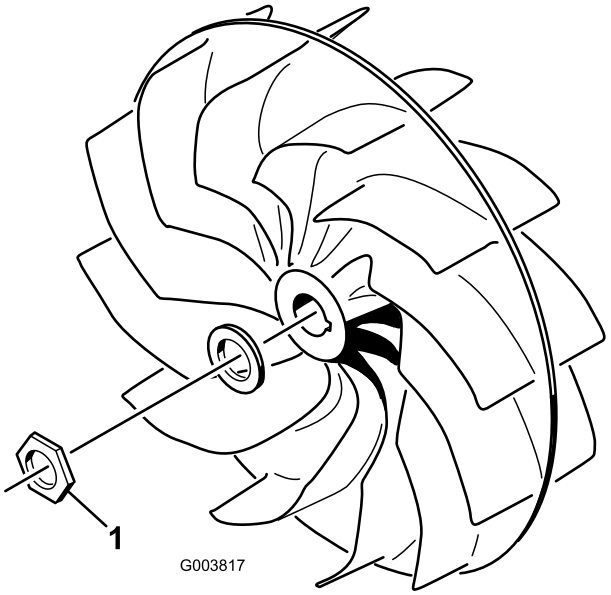

Figure 18

1. Fan mounting nut

Servicing the Castor Arm Bushings

The castor arms have bushings pressed into the top and bottom of the tube and after many hours of operation, the bushings will wear. To check the bushings, move the castor fork back and forth and from side to side. If the castor spindle is loose inside the bushings, the bushings are worn and must be replaced.

1. Raise the debris blower so that the wheels are off of the floor. Block the blower so that it cannot accidentally fall.
2. Remove the tensioning cap, spacer, and thrust washer from the top of the castor spindle.
3. Pull the castor spindle out of the mounting tube. Allow the thrust washer and spacer to remain on the bottom of the spindle.
4. Insert a pin punch into the top or bottom of the mounting tube and drive the bushing out of the tube (Figure 19). Also drive the other bushing out of the tube. Clean the inside of the tubes to remove dirt.

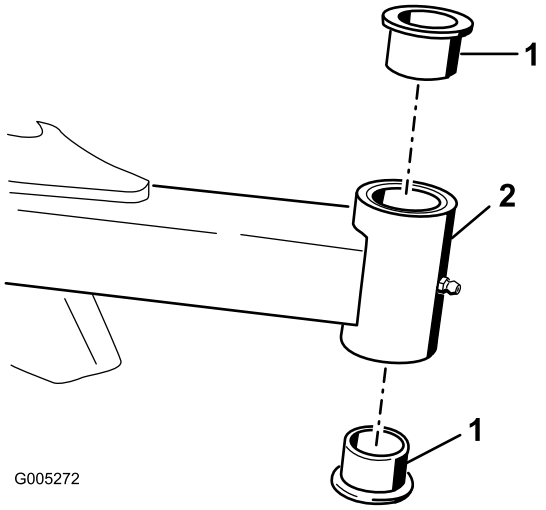

Figure 19

1. Bushings
2. Castor arm tube

5. Apply grease to the inside and outside of the new bushings. Using a hammer and flat plate, drive the bushings into the mounting tube.
6. Inspect the castor spindle for wear and replace it if it is damaged.
7. Push the castor spindle through the bushings and mounting tube. Slide the thrust washer and spacer onto the spindle. Install the tensioning cap on the castor spindle to retain all parts in place.

Servicing the Castor Wheels and Bearings

1. Remove the locknut from the bolt holding the castor wheel assembly and washers between the castor fork (Figure 20). Grasp the castor wheel and slide the bolt out of the fork. Remove the tire spanner from inside the wheel assembly.

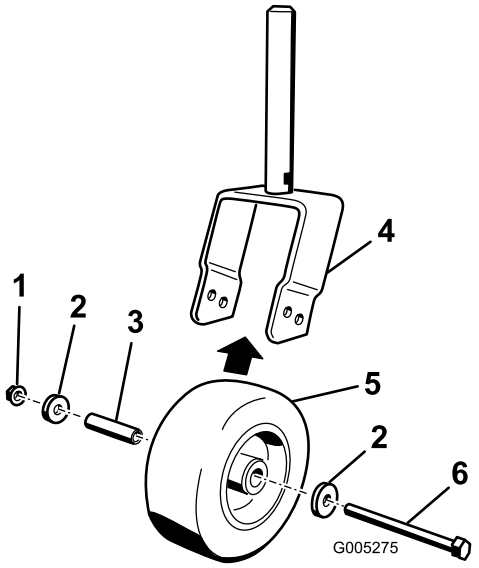

Figure 20

1. Locknut
2. Washer
3. Tire spanner
4. Castor fork
5. Castor wheel
6. Bolt

2. Remove one of the outer bearings from the wheel hub and allow the inner bearing to fall out (Figure 21). Remove the bearing from the opposite side of the wheel hub.

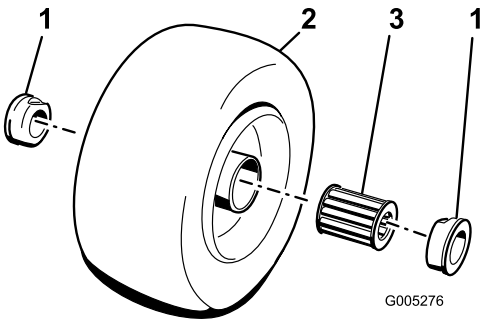

Figure 21

1. Bearing (outer)
2. Wheel assembly
3. Bearing (inner)

3. Check the bearings (inner and outer), tire spanner, and inside of the wheel hub for wear. Replace any damaged parts.
4. To assemble the castor wheel, push a outer bearing into the wheel hub. When installing the bearings, press on the outer race of the bearing.
5. Slide the inner bearing into the wheel hub. Push the other bearing into the open end of the wheel hub to captivate the bearing spacer inside the wheel hub.
6. Insert the tire spanner into the wheel assembly.
7. Install the castor wheel assembly and washers between the castor fork and secure it in place with the bolt and locknut.

The Toro General Commercial Products Warranty

A Two-Year Limited Warranty

Conditions and Products Covered

The Toro Company and its affiliate, Toro Warranty Company, pursuant to an agreement between them, jointly warrant your Toro Commercial Product ("Product") to be free from defects in materials or workmanship for two years or 1500 operational hours*, whichever occurs first. Where a warrantable condition exists, we will repair the Product at no cost to you including diagnosis, labor, parts, and transportation. This warranty begins on the date the Product is delivered to the original retail purchaser.

* Product equipped with hour meter

Instructions for Obtaining Warranty Service

You are responsible for notifying the Commercial Products Distributor or Authorized Commercial Products Dealer from whom you purchased the Product as soon as you believe a warrantable condition exists.

If you need help locating a Commercial Products Distributor or Authorized Dealer, or if you have questions regarding your warranty rights or responsibilities, you may contact us at:

Toro Commercial Products Service Department
Toro Warranty Company
8111 Lyndale Avenue South
Bloomington, MN 55420-1196
952-888-8801 or 800-982-2740
E-mail: commercial.service@toro.com

Owner Responsibilities

As the Product owner, you are responsible for required maintenance and adjustments stated in your operator's manual. Failure to perform required maintenance and adjustments can be grounds for disallowing a warranty claim.

Items and Conditions Not Covered

Not all product failures or malfunctions that occur during the warranty period are defects in materials or workmanship. This express warranty does not cover the following:

- Product failures which result from the use of non-Toro replacement parts, or from installation and use of add-on, modified, or unapproved accessories
- Product failures which result from failure to perform required maintenance and/or adjustments
- Product failures which result from operating the Product in an abusive, negligent or reckless manner
- Parts subject to consumption through use unless found to be defective. Examples of parts which are consumed, or used up, during normal Product operation include, but are not limited to, blades, reels, bedknives, tines, spark plugs, castor wheels, tires, filters, belts, and certain sprayer components such as diaphragms, nozzles, and check valves, etc.
- Failures caused by outside influence. Items considered to be outside influence include, but are not limited to, weather, storage practices, contamination, use of unapproved coolants, lubricants, additives, or chemicals, etc.
- Normal "wear and tear" items. Normal "wear and tear" includes, but is not limited to, damage to seats due to wear or abrasion, worn painted surfaces, scratched decals or windows, etc.

Parts

Parts scheduled for replacement as required maintenance are warranted for the period of time up to the scheduled replacement time for that part.

Parts replaced under this warranty become the property of Toro. Toro will make the final decision whether to repair any existing part or assembly or replace it. Toro may use factory remanufactured parts rather than new parts for some warranty repairs.

General Conditions

Repair by an Authorized Toro Distributor or Dealer is your sole remedy under this warranty.

Neither The Toro Company nor Toro Warranty Company is liable for indirect, incidental or consequential damages in connection with the use of the Toro Products covered by this warranty, including any cost or expense of providing substitute equipment or service during reasonable periods of malfunction or non-use pending completion of repairs under this warranty. Except for the Emissions warranty referenced below, if applicable, there is no other express warranty. All implied warranties of merchantability and fitness for use are limited to the duration of this express warranty.

Some states do not allow exclusions of incidental or consequential damages, or limitations on how long an implied warranty lasts, so the above exclusions and limitations may not apply to you.

This warranty gives you specific legal rights, and you may also have other rights which vary from state to state.

Note regarding engine warranty: The Emissions Control System on your Product may be covered by a separate warranty meeting requirements established by the U.S. Environmental Protection Agency (EPA) and/or the California Air Resources Board (CARB). The hour limitations set forth above do not apply to the Emissions Control System Warranty. Refer to the Engine Emission Control Warranty Statement printed in your operator's manual or contained in the engine manufacturer's documentation for details.

Countries Other than the United States or Canada

Customers who have purchased Toro products exported from the United States or Canada should contact their Toro Distributor (Dealer) to obtain guarantee policies for your country, province, or state. If for any reason you are dissatisfied with your Distributor's service or have difficulty obtaining guarantee information, contact the Toro importer. If all other remedies fail, you may contact us at Toro Warranty Company.

Part No. 374-0031 Rev. C