Form Number 3351-492 Rev A

# Workman® 1100
## Utility Vehicle

**Model No. 07252 - 240000001 and up.**

# Parts Catalog

**Ordering Replacement Parts**

To order replacement parts, please supply the part number, the quantity, and the description of each part desired.

**Understanding Reference Numbers**

Each Identified part in an illustration has a reference number. The reference number for a part also appears in the parts list, along with other information about the part.

This catalog uses two special reference number formats, one to indicate parts in a service assembly and another to indicate the quantity of a given part in an illustration.

**Service Assembly Reference Numbers**

Parts in service assemblies have reference numbers in the form a:b. The a represents the reference number of the entire service assembly and the b represents a sequential number unique to each part within the service assembly.

For example, a wheel assembly might be identified by reference number 6, the tire by 6:1, the valve by 6:2, and the wheel by 6:3. When you order the assembly identified by reference number 6, you receive all parts identified by reference numbers 6:1, 6:2, and 6:3. However, you may also order any part individually. Reference numbers of this type appear in illustrations and in part lists.

**Reference Numbers Indicating Quantity**

In an illustration, if a reference number indicates more than one part, the reference number has the form nX y. The n represents the quantity of the part, the X is the multiplication symbol, and the y represents the reference number.

For example, in an illustration, the reference number 2X 37 means that two of the parts identified by reference number 37 are indicated.

© The Toro Company - 2006
All Rights Reserved

Register your product at www.Toro.com

# Contents


| Description | Page |
|---|---|
| Hood and Fender Assembly | 3 |
| Pedal Assembly | 4 |
| Shifter Assembly | 5 |
| Frame Assembly | 6 |
| Seatbase Assembly | 7 |
| Front Tire and Steering Assembly | 8 |
| Tire, Wheel and Hub Assembly | 9 |
| Rear Tire and Transaxle Assembly | 10 |
| Driven Clutch Assembly No. 99-7104 | 11 |
| Transaxle Assembly No. 104-6898 | 12 |
| Right Hand Brake Assembly No. 99-7136 | 14 |
| Left Hand Brake Assembly No. 99-7137 | 15 |
| Drivetrain Mount Assembly | 16 |
| Air Cleaner Assembly No. 99-7120 | 17 |
| Upper Steering Assembly | 18 |
| Steering Gearbox Assembly No. 99-7660 | 19 |
| Box and Tailgate Installation Assembly | 20 |
| Box and Tailgate Assembly | 21 |
| Engine and Clutch Assembly | 22 |
| Drive Clutch Assembly No. 99-7103 | 24 |
| Starter Generator Assembly No. 99-7108 | 25 |
| Crankshaft Assembly Kohler CS12 PA-941621 | 26 |
| Crankcase Assembly Kohler CS12 PA-941621 | 27 |
| Oil Pan and Lubrication Assembly Kohler CS12 PA-941621 | 28 |
| Head, Valve and Breather Assembly Kohler CS12 PA-941621 | 29 |
| Ignition and Electrical Assembly Kohler CS12 PA-941621 | 30 |
| Blower Housing and Baffle Assembly Kohler CS12 PA-941621 | 31 |
| Fuel System Assembly Kohler CS12 PA-941621 | 32 |
| Air Intake and Filtration Assembly Kohler CS12 PA-941621 | 33 |
| Exhaust Assembly Kohler CS12 PA-941621 | 34 |


# Part Description Abbreviations

Part descriptions in this catalog may include the following abbreviations.

| | |
|---|---|
| AR | as required |
| ASM | assembly |
| BBC | blade brake clutch |
| CARR | carriage |
| DEG | degrees |
| EXT | external |
| FH | flat head |
| GA | gauge |
| HD | heavy-duty |
| HF | hex flange |
| HH | hex head |
| HHF | hex head flange |
| HHFTF | hex head flange thread forming |
| HJ | hex jam |
| HLH | hex lag head |
| HOC | height-of-cut |
| HSBH | hex socket button head |
| HSFH | hex socket flat head |
| HSH | hex socket head |
| HWH | hex washer head |
| HWHTF | hex washer head thread forming |
| HYD | hydraulic |
| LH | left hand |
| NI | nylon insert |
| NPTF | national pipe thread fine |
| PFH | phillips flat head |
| PPH | phillips pan head |
| PPHTF | phillips pan head thread forming |
| PRH | phillips round head |
| PTH | phillips truss head |
| PTO | power-take-off |
| RH | right hand |
| ROPS | roll-over protection system |
| SFH | slotted fillister head |
| SHH | slotted hex head |
| SHWH | slotted hex washer head |
| SPH | slotted pan head |
| SQH | square head |
| SRH | slotted round head |
| STD | standard |
| TAP | self tapping |
| TTH | torx truss head |

# Footnotes

❶ Not illustrated

❷ Not serviced separately

❸ Obtain Parts From Kohler

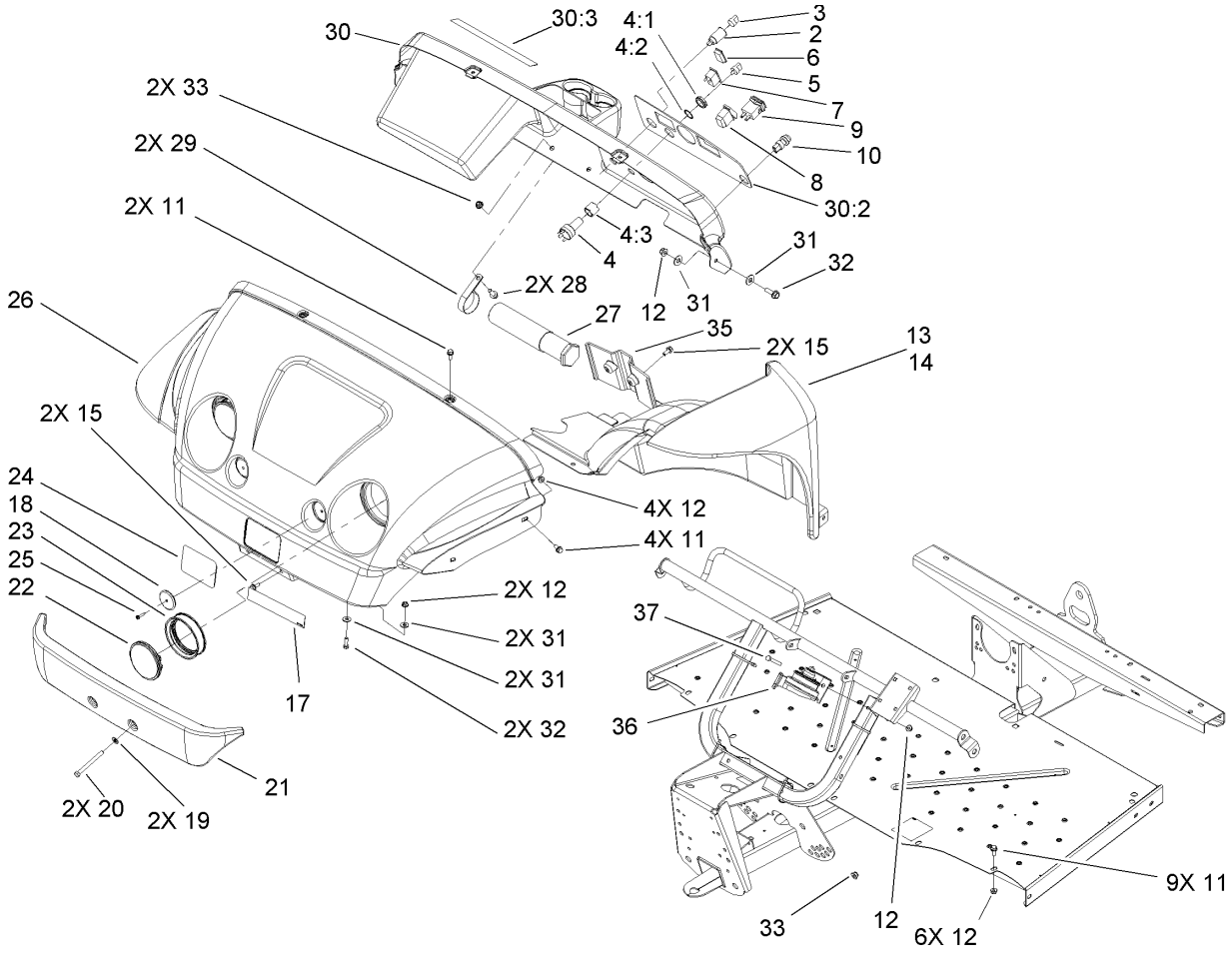


# Hood and Fender Assembly

| Ref | Part No. | Qty. | Description |
|---|---|---|---|
| 2 | 99-7411 | 1 | Point-Power |
| 3 | 99-7416 | 1 | Cap |
| 4 | 104-6929 | 1 | Switch-Ignition |
| 4:1 | 104-7042 | 1 | Nut-Switch, Plastic |
| 4:2 | 104-7019 | 2 | Washer-Lock, Internal |
| 4:3 | 104-7021 | 1 | Spacer-Switch |
| 5 | 99-7418 | 2 | Key-Ignition |
| 6 | 99-7420 | 1 | Plug-Hole |
| 7 | 99-7410 | 1 | Light-Oil |
| 8 | 95-8999 | 1 | Switch |
| 9 | 94-4208 | 1 | Hourmeter |
| 10 | 18-2830 | 1 | Button-Horn |
| 11 | 3234-5 | 13 | Screw-HHF |
| 12 | 104-8300 | 15 | Nut-Flange, NI |
| 13 | 104-7076 | 1 | LH Fender ASM |
| 14 | 104-7077 | 1 | RH Fender ASM |
| 15 | 104-7206 | 4 | Screw-HHF |
| 17 | 104-7269 | 1 | Decal |
| 18 | 99-7312 | 2 | Reflector |
| 19 | 3256-24 | 2 | Washer-Flat |
| 20 | 323-42 | 2 | Screw-HH |
| 21 | 99-7733 | 1 | Bumper-Plastic |
| 22 | 99-7310 | 2 | Headlight |
| 23 | 99-7311 | 2 | Mount-Headlight |

| Ref | Part No. | Qty. | Description |
|---|---|---|---|
| 24 | 99-7339 | 1 | Decal |
| 25 | 32144-89 | 2 | Screw-Forming, Thread |
| 26 | 104-7003 | 1 | Hood |
| 27 | 74-0720 | 1 | Tube-Manual |
| 28 | 3234-11 | 2 | Screw-HHF |
| 29 | 2412-133 | 2 | R-Clamp |
| 30 | 107-0701 | 1 | Dash ASM |
| 30:2 | 107-0699 | 1 | Decal-Panel, Control |
| 30:3 | 99-7344 | 1 | Decal-Danger |
| 31 | 3256-3 | 8 | Washer-Flat |
| 32 | 3234-17 | 4 | Screw-HHF |
| 33 | 104-8301 | 4 | Nut-Flange, NI |
| 35 | 104-7075 | 1 | Cover-Channel |
| 36 | 116749 | 1 | Horn |
| 37 | 322-11 | 1 | Screw-HH |

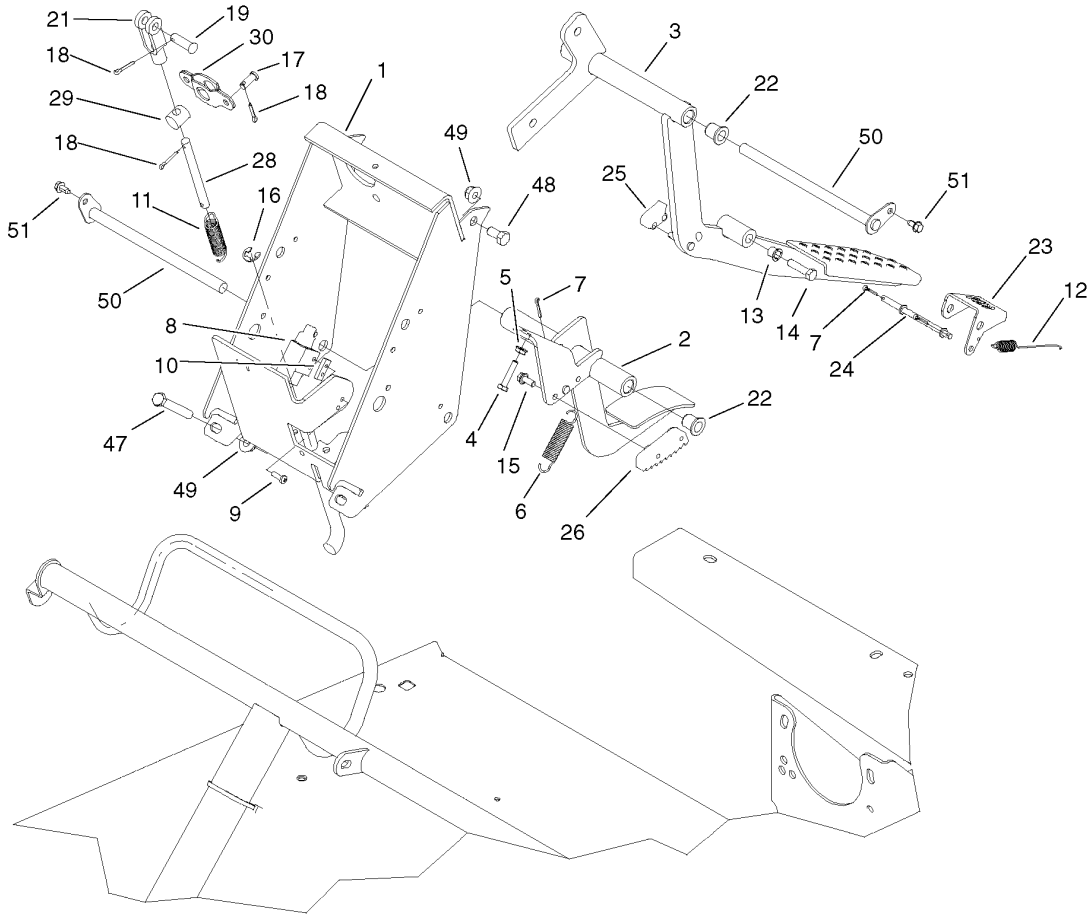


# Pedal Assembly

| Ref | Part No. | Qty. | Description |
|---|---|---|---|
| 1 | 104-7160-03 | 1 | Frame-Pedals |
| 2 | 104-7165-03 | 1 | Pedal-Throttle |
| 3 | 104-7170-03 | 1 | Pedal-Brake |
| 4 | 321-7 | 2 | Screw-HH |
| 5 | 32149-2 | 2 | Nut-Keps |
| 6 | 104-6415 | 1 | Spring-Return, Pedal |
| 7 | 3272-4 | 4 | Pin-Cotter |
| 8 | 99-7407 | 1 | Switch |
| 9 | 104-7221 | 2 | Screw-PPH |
| 10 | 1-633181 | 1 | Plate-Tapped |
| 11 | 613386 | 1 | Spring-Brake |
| 12 | 92-6945 | 1 | Spring-Extension |
| 13 | 52-2891 | 2 | Bushing-Link, Steering |
| 14 | 323-12 | 1 | Screw-HH |
| 15 | 3234-33 | 2 | Screw-HHF |
| 16 | 32120-47 | 2 | Ring-Retaining, External |
| 17 | 283-62 | 2 | Pin-Clevis |
| 18 | 3272-10 | 4 | Pin-Cotter |
| 19 | 283-2 | 1 | Pin-Clevis |
| 21 | 1-633131 | 1 | Yoke-Linkage, Brake |
| 22 | 256-155 | 4 | Bushing-Flange |
| 23 | 104-6613 | 1 | Pedal-Park |
| 24 | 104-6616 | 1 | Rod-Park |
| 25 | 104-6624 | 1 | Detent-Brake |

| Ref | Part No. | Qty. | Description |
|---|---|---|---|
| 26 | 104-6614 | 1 | Pawl-Brake |
| 27 | 104-6571 | 2 | Cable-Brake |
| 28 | 104-6597 | 1 | Rod-Threaded |
| 29 | 104-6598 | 1 | Pin-Pivot |
| 30 | 104-6599 | 1 | Pivot-Brake |
| 47 | 323-11 | 2 | Screw-HH |
| 48 | 323-4 | 2 | Screw-HH |
| 49 | 104-8301 | 5 | Nut-Flange, NI |
| 50 | 104-7164 | 2 | Pivot-Pedal |
| 51 | 12-3270 | 2 | Screw |

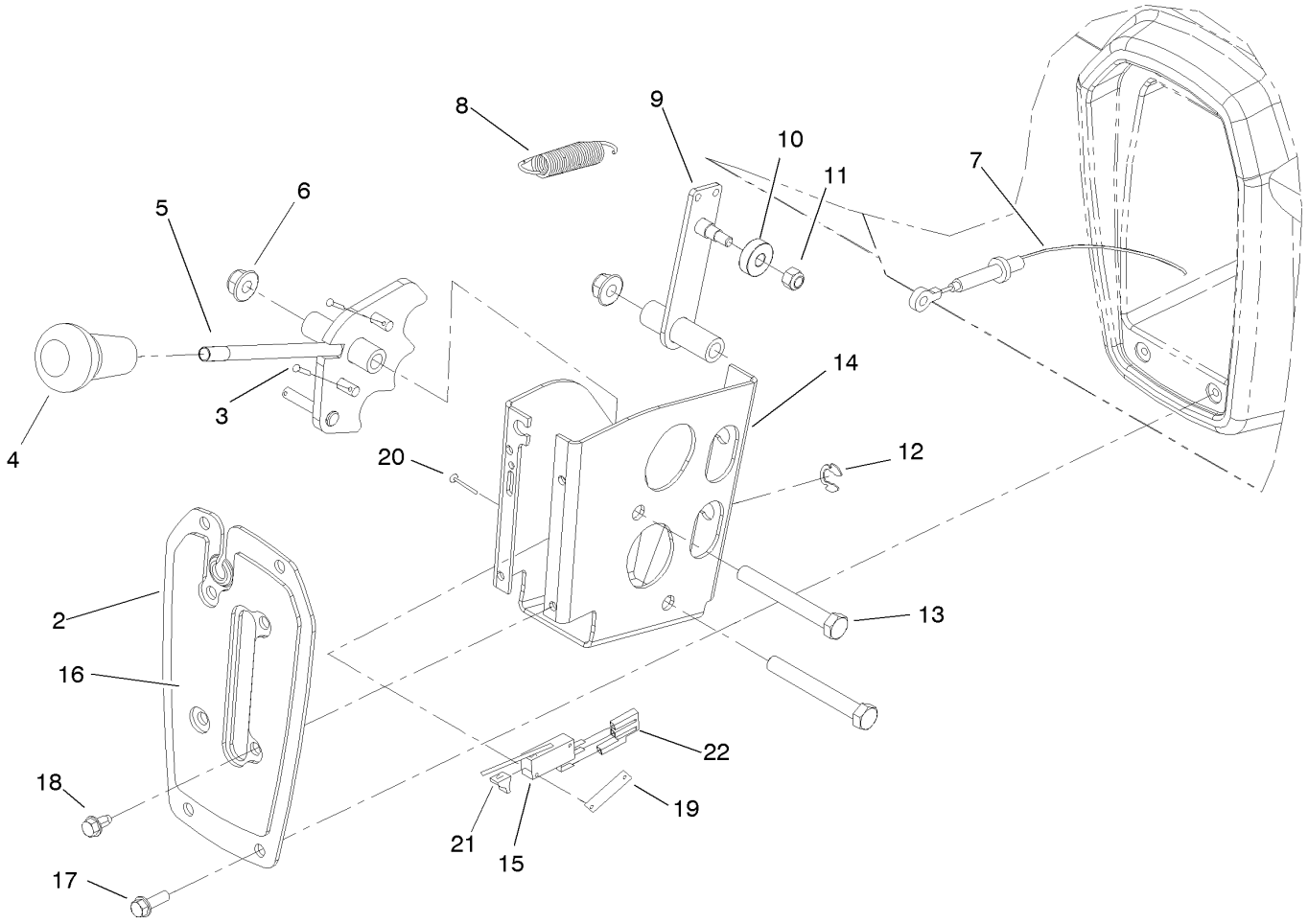


# Shifter Assembly

| Ref | Part No. | Qty. | Description |
|---|---|---|---|
| 2 | 99-7887-03 | 1 | Plate-Shifter |
| 3 | 3272-5 | 2 | Pin-Cotter |
| 4 | 99-7981 | 1 | Knob-Grip, Soft |
| 5 | 99-7879 | 1 | Lever-Shifter |
| 6 | 104-8301 | 2 | Nut-Flange, NI |
| 7 | 104-6896 | 2 | Cable-Shift |
| 8 | 104-6415 | 1 | Spring-Return, Pedal |
| 9 | 99-7176 | 1 | Detent |
| 10 | 251-307 | 1 | Bearing-Ball |
| 11 | 3296-42 | 1 | Nut-Lock, NI |
| 12 | 32151-101 | 2 | E-Ring |
| 13 | 323-14 | 2 | Screw-HH |
| 14 | 104-6509-03 | 1 | Bracket-Shift |
| 15 | 88-9932 | 1 | Switch-Micro |
| 16 | 99-7952 | 1 | Decal-Shifter |
| 17 | 32105-15 | 4 | Screw |
| 18 | 12-3270 | 4 | Screw |
| 19 | 3290-354 | 1 | Nut-Speed |
| 20 | 3290-313 | 2 | Screw-Ph |
| 21 | 93-3240 | 1 | Plunger-Seal |
| 22 | 107-0725 | 1 | Harness-Jumper, Shift |

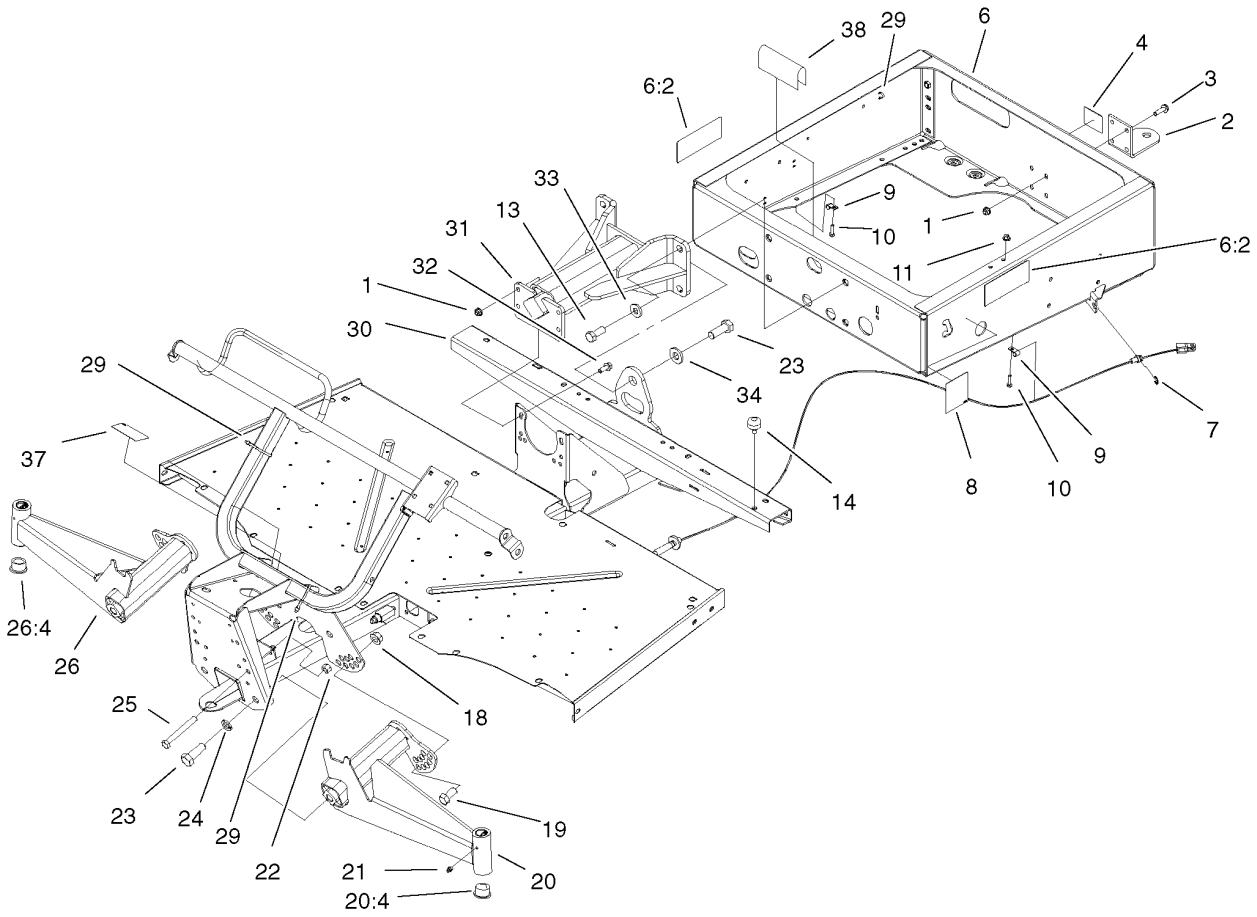


# Frame Assembly

| Ref | Part No. | Qty. | Description |
|---|---|---|---|
| 1 | 104-8301 | 8 | Nut-Flange, NI |
| 2 | 99-7654-03 | 1 | Hitch-Duty, Light |
| 3 | 3234-24 | 4 | Screw-HHF |
| 4 | 99-7350 | 1 | Decal-Information |
| 6 | 99-7362 | 1 | Rear Frame ASM |
| 6:2 | 99-7345 | 2 | Decal-Warning |
| 7 | 32120-47 | 2 | Ring-Retaining, External |
| 8 | 99-7349 | 1 | Decal-Information, Boxlatch |
| 9 | 2412-89 | 4 | Clamp |
| 10 | 321-6 | 4 | Screw-HH |
| 11 | 32128-33 | 4 | Nut-HF |
| 13 | 327-4 | 4 | Screw-HH |
| 14 | 87-2440 | 1 | Bumper-Rubber |
| 18 | 32128-54 | 2 | Nut-HF |
| 19 | 3214-2 | 2 | Screw-HH |
| 20 | 99-7685 | 1 | LH A-Arm ASM |
| 20:4 | 3-0348 | 2 | Bushing |
| 21 | 302-5 | 2 | Fitting-Grease |
| 22 | 3296-23 | 2 | Nut-Lock, NI |
| 23 | 328-24 | 5 | Screw-HH |
| 24 | 3254-7 | 4 | Washer-Lock, Int |
| 25 | 325-17 | 2 | Screw-HH |
| 26 | 99-7684 | 1 | RH A-Arm ASM |
| 26:4 | 3-0348 | 2 | Bushing |

| Ref | Part No. | Qty. | Description |
|---|---|---|---|
| 29 | 3290-379 | 12 | Tie-Cable |
| 30 | 104-7197-03 | 1 | Front Frame ASM |
| 31 | 99-7700 | 1 | Pivot Yoke ASM |
| 32 | 3234-11 | 4 | Screw-HHF |
| 33 | 99-7667 | 4 | Washer-Flat |
| 34 | 87-3060 | 1 | Washer-Hardened |
| 37 | 104-6855 | 1 | Decal-Capacity |
| 38 | 95-5686 | 1 | Trim |

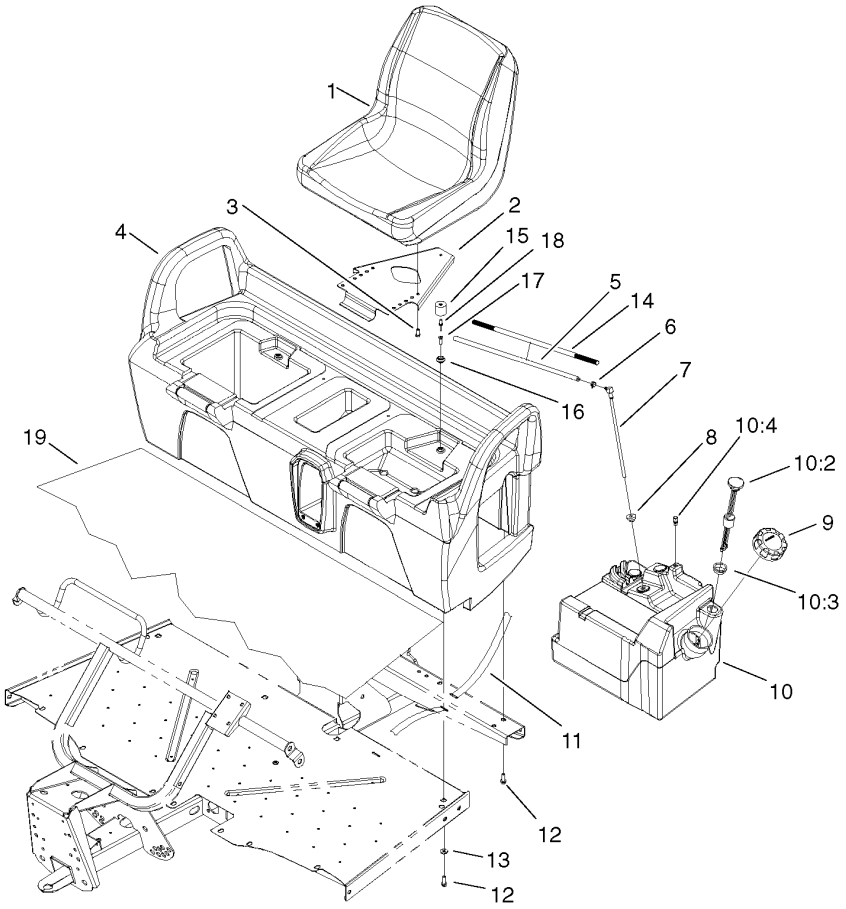


# Seatbase Assembly

| Ref | Part No. | Qty. | Description |
|---|---|---|---|
| 1 | 106-6672 | 2 | Seat |
| 2 | 99-7829 | 2 | Bracket-Seat |
| 3 | 33114-016 | 8 | Screw-HH |
| 4 | 104-6401 | 1 | Seat Base ASM |
| 5 | 99-7187 | 1 | Hose-Fuel |
| 6 | 2412-98 | 1 | Clamp |
| 7 | 99-7264 | 1 | Pipe-Stand |
| 8 | 46-6560 | 1 | Bushing |
| 9 | 95-4192 | 1 | Unleaded Gas Cap ASM |
| 10 | 99-7323 | 1 | Fuel Tank ASM |
| 10:2 | 99-7262 | 1 | Gauge-Fuel |
| 10:3 | 95-8972 | 1 | Grommet |
| 10:4 | 99-7267 | 1 | Vent-Air |
| 11 | 3339-175 | 1 | Strapping-Web, 48 Inch |
| 12 | 3234-17 | 8 | Screw-HHF |
| 13 | 88-7200 | 4 | Washer-Flat |
| 14 | 99-7129 | 1 | Conduit-Line, Fuel |
| 15 | 99-7830 | 2 | Rubber Receptical ASM |
| 16 | 99-7833 | 2 | Post-Holding |
| 17 | 32108-5 | 2 | Screw-FH |
| 18 | 3290-412 | 2 | Rivet |
| 19 | 104-6590 | 1 | Mat-Floor |

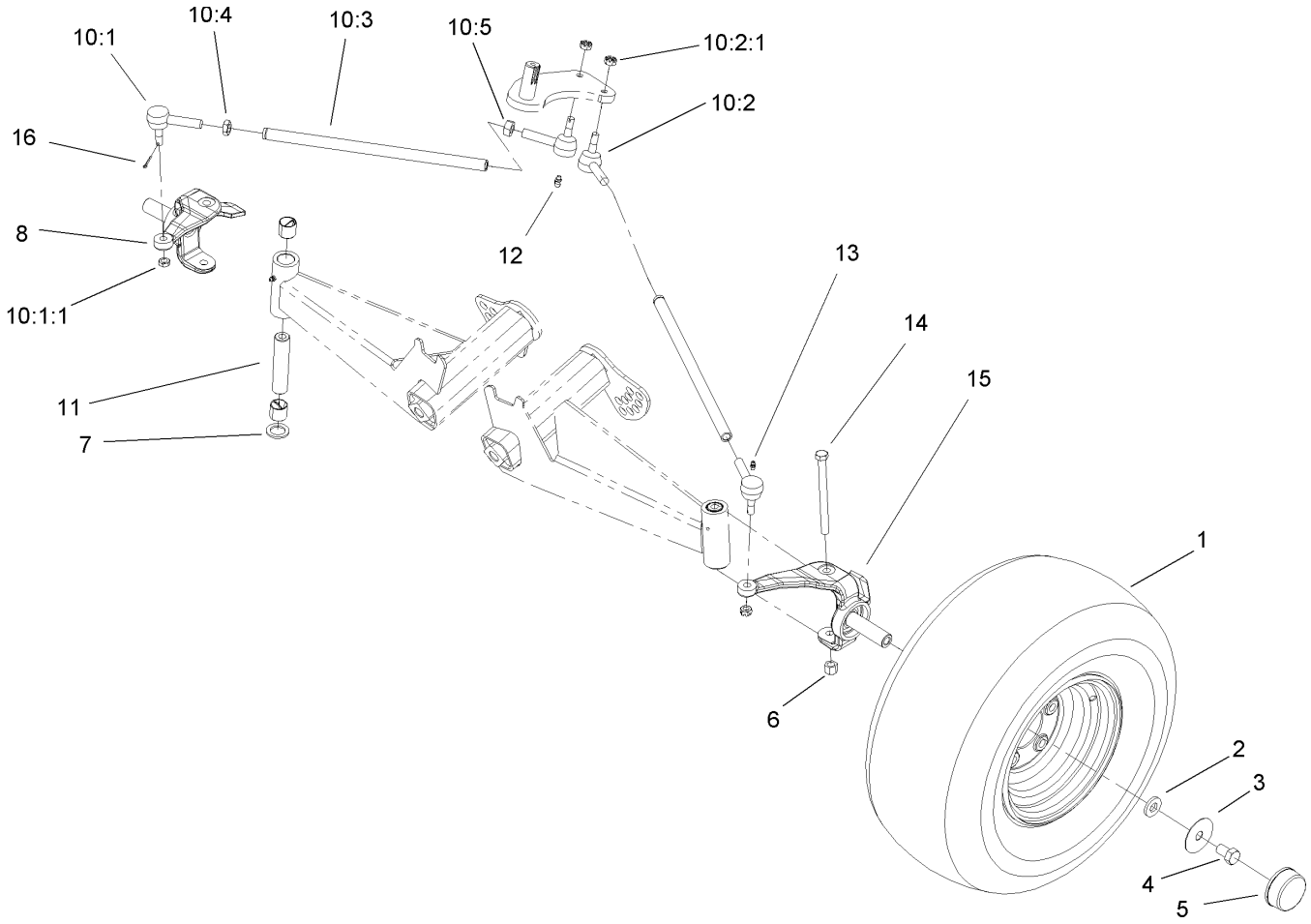


# Front Tire and Steering Assembly

| Ref | Part No. | Qty. | Description |
|---|---|---|---|
| ❷1 | | 2 | Tire, Wheel And Hub ASM |
| 2 | 99-7667 | 2 | Washer-Flat |
| 3 | 99-7719 | 2 | Washer |
| 4 | 327-2 | 2 | Screw-HH |
| 5 | 94-7871 | 2 | Cap-Dust |
| 6 | 3296-23 | 2 | Nut-Lock, NI |
| 7 | 256-115 | 2 | Washer-Thrust |
| 8 | 99-7487-03 | 1 | Spindle-RH |
| ❷10 | | 2 | Rod-Tie |
| 10:1 | 112772 | 1 | Joint-Ball, RH |
| 10:1:1 | 915031 | 1 | Nut |
| 10:2 | 112771 | 1 | Joint-Ball, LH |
| 10:2:1 | 915031 | 1 | Nut |
| 10:3 | 99-7600-03 | 1 | Rod-Tie |
| 10:4 | 3220-11 | 1 | Nut-Jam |
| 10:5 | 3218-21 | 1 | Nut-Jam |
| 11 | 99-7499 | 2 | Sleeve-Kingpin |
| 12 | 302-60 | 2 | Fitting-Grease, 90 DEG |
| 13 | 302-5 | 2 | Fitting-Grease |
| 14 | 325-20 | 2 | Screw-HH |
| 15 | 99-7486-03 | 1 | Spindle-LH |
| 16 | 3272-7 | 4 | Pin-Cotter |

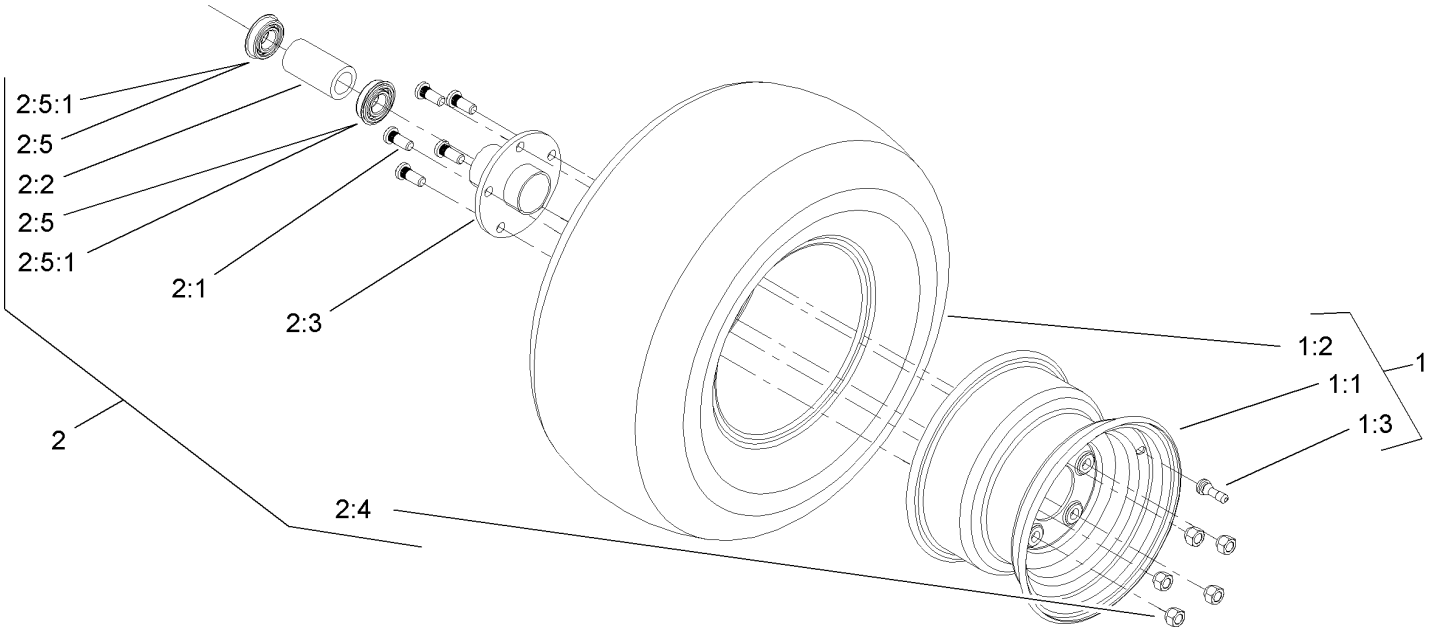


# Tire, Wheel and Hub Assembly

| Ref | Part No. | Qty. | Description |
|---|---|---|---|
| 1 | 104-7290 | 1 | Tire \ Wheel ASM |
| 1:1 | 104-7288 | 1 | Wheel |
| 1:2 | 104-7289 | 1 | Tire |
| 1:3 | 232-27 | 1 | Stem-Valve |
| 2 | 104-7287 | 1 | Hub And Flange ASM |
| 2:1 | 104-7283 | 5 | Stud |
| 2:2 | 104-7284 | 1 | Spacer |
| 2:3 | 104-7286 | 1 | Hub And Flange |
| 2:4 | 242-50 | 5 | Nut-Lug |
| 2:5 | 94-7538 | 2 | Bearing |
| 2:5:1 | 94-2053 | 1 | Ring-Snap |

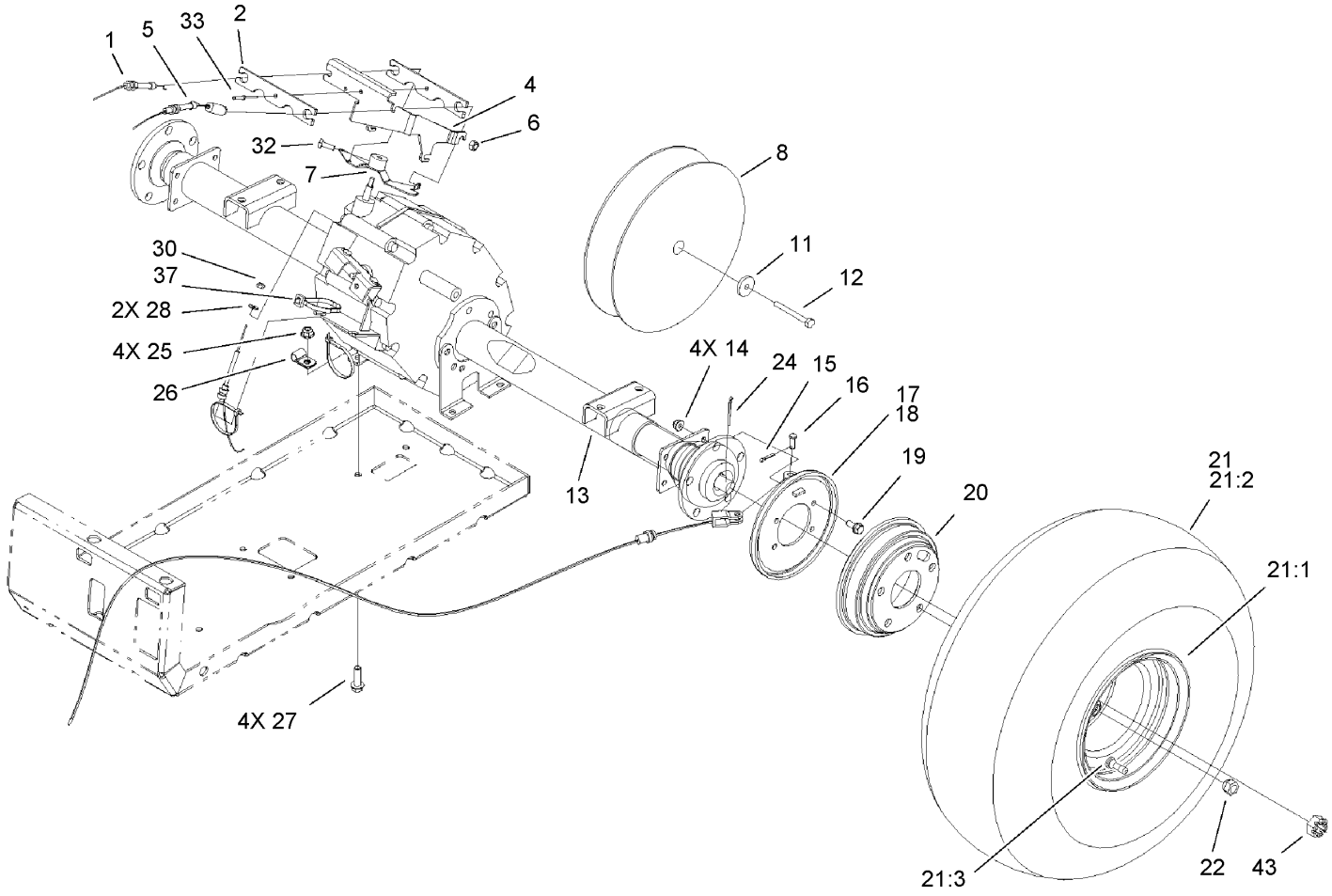


# Rear Tire and Transaxle Assembly

| Ref | Part No. | Qty. | Description |
|---|---|---|---|
| 1 | 104-6474 | 1 | Cable-Governor, 12Hp |
| 2 | 99-7121 | 2 | Bracket-Tamper |
| 4 | 99-7054 | 1 | Bracket-Cables |
| 5 | 104-6572 | 1 | Cable-Throttle |
| 6 | 33024-00 | 3 | Nut-Lock |
| 7 | 104-6569 | 1 | Bracket-Governor |
| 8 | 99-7104 | 1 | Clutch-Driven |
| 11 | 104-6563 | 1 | Washer-Stepped |
| 12 | 104-6564 | 1 | Screw-HH |
| 13 | 104-6898 | 1 | Transaxle |
| 14 | 104-8300 | 8 | Nut-Flange, NI |
| 15 | 3272-10 | 2 | Pin-Cotter |
| 16 | 283-62 | 2 | Pin-Clevis |
| 17 | 99-7136 | 1 | Brake-RH |
| 18 | 99-7137 | 1 | Brake-LH |
| 19 | 3234-5 | 8 | Screw-HHF |
| 20 | 104-6500 | 2 | Drum-Brake |
| ❶21 | | 2 | Tire/Wheel ASM |
| 21:1 | 104-7288 | 1 | Wheel |
| 21:2 | 104-7289 | 1 | Tire |
| 21:3 | 232-27 | 1 | Stem-Valve |
| 22 | 242-50 | 10 | Nut-Lug |
| 24 | 3272-42 | 2 | Pin-Cotter |
| 25 | 104-8301 | 4 | Nut-Flange, NI |

| Ref | Part No. | Qty. | Description |
|---|---|---|---|
| 26 | 2412-10 | 1 | R-Clamp |
| 27 | 3234-24 | 4 | Screw-HHF |
| 28 | 3256-49 | 2 | Washer-Flat (Only On: 38053) |
| 30 | 3296-2 | 2 | Nut-Lock |
| 32 | 3241-6 | 2 | Screw-SQH |
| 33 | 99-7122 | 1 | Rivet-Annodized |
| 37 | 3290-378 | 1 | Tie-Cable |
| 43 | 104-1656 | 2 | Nut-Castle |

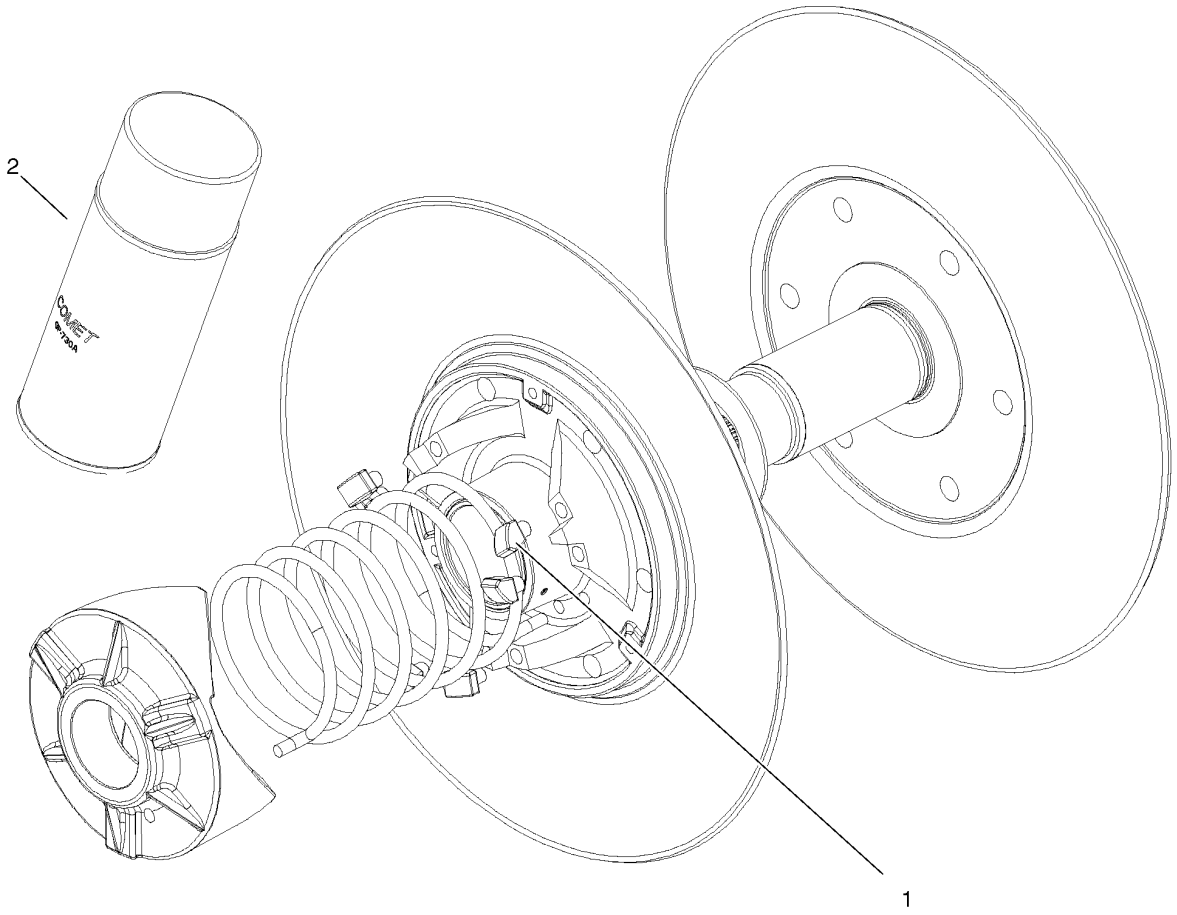


# Driven Clutch Assembly No. 99-7104

| Ref | Part No. | Qty. | Description |
|---|---|---|---|
| 1 | 104-4257 | 1 | Button Kit |
| 2 | 104-7011 | 1 | Lubricant-Dry |

# Transaxle Assembly No. 104-6898

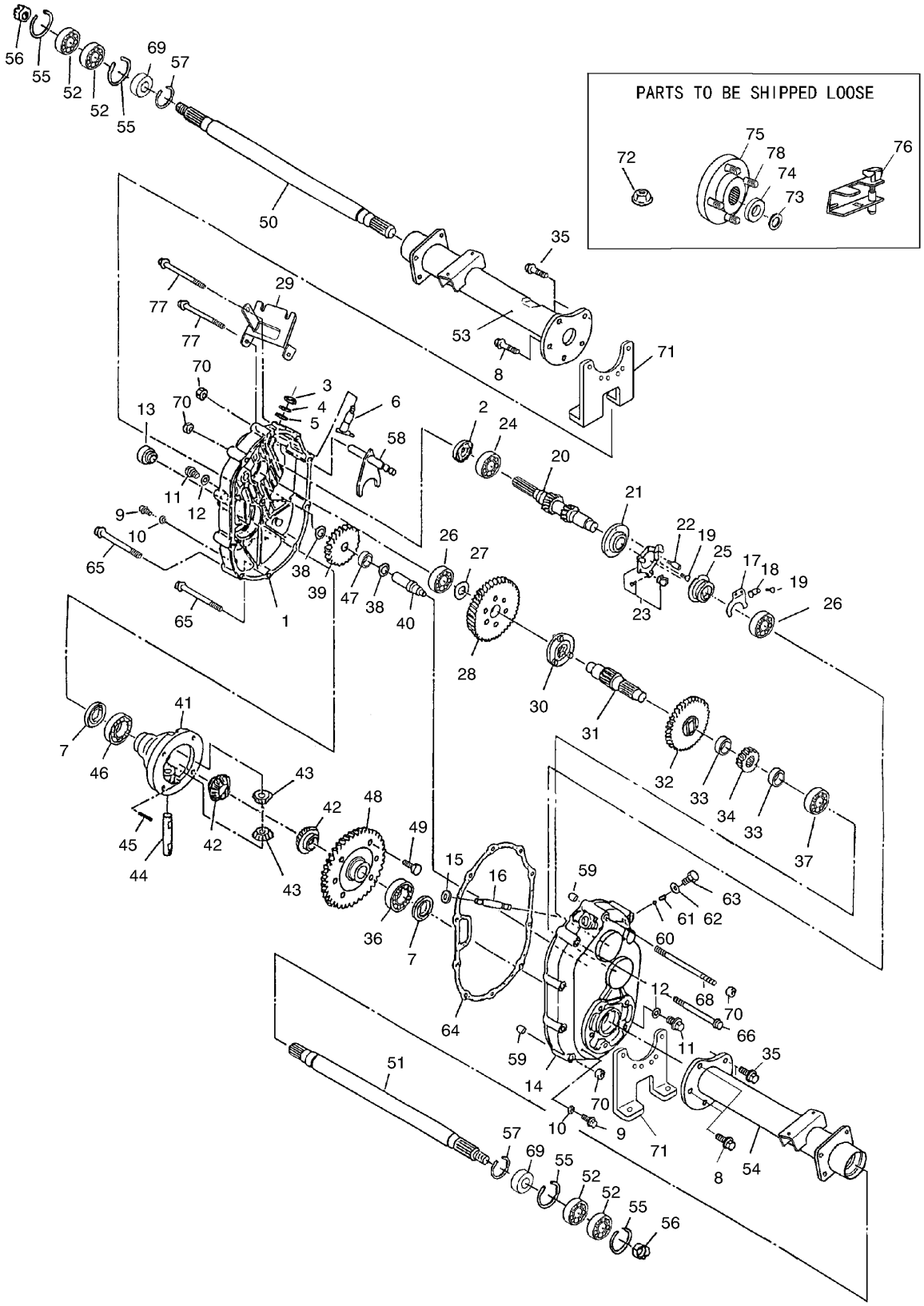

# Transaxle Assembly No. 104-6898

| Ref | Part No. | Qty. | Description |
|---|---|---|---|
| 1 | 104-1601 | 1 | Case-LH, Complete |
| 2 | 104-1602 | 1 | Seal-Oil |
| 3 | 104-1603 | 1 | Seal-Oil |
| 4 | 104-1604 | 1 | Ring-Snap |
| 5 | 104-1605 | 1 | Spacer |
| 6 | 104-1606 | 1 | Shaft-Selector |
| 7 | 104-1607 | 2 | Seal-Oil |
| 8 | 104-1608 | 4 | Bolt-Flange |
| 9 | 104-1609 | 2 | Plug-Check, Oil |
| 10 | 104-1610 | 2 | Gasket |
| 11 | 104-1611 | 2 | Plug-Drain, Oil |
| 12 | 104-1612 | 2 | Gasket |
| 13 | 104-1613 | 1 | Plug-Filler, Oil |
| 14 | 104-1614 | 1 | Case-Complete, RH |
| 15 | 104-1615 | 1 | Seal-Oil |
| 16 | 104-1616 | 1 | Shaft-Governor |
| 17 | 104-1617 | 1 | Fork-Governor |
| 18 | 104-1618 | 1 | Stopper |
| 19 | 104-1619 | 4 | Screw And Washer ASM |
| 20 | 104-7002 | 1 | Shaft-Input, Complete |
| 21 | 104-1621 | 1 | Base-Governor |
| 22 | 104-1622 | 1 | Pin-Lock |
| 23 | 104-1623 | 1 | Unit-Plate, Governor |
| 24 | 104-1624 | 1 | Bearing-Ball |
| 25 | 104-1625 | 1 | Sleeve-Governor |
| 26 | 104-1626 | 2 | Bearing-Ball |
| 27 | 104-1627 | 1 | Spacer |
| 28 | 104-1628 | 1 | Gear |
| 29 | 104-1629 | 1 | Bracket-Wire, Change |
| 30 | 104-1630 | 1 | Clutch-Pin |
| 31 | 104-1631 | 1 | Shaft-Center |
| 32 | 104-1632 | 1 | Gear-47 |
| 33 | 104-1633 | 2 | Collar |
| 34 | 104-1634 | 1 | Gear |
| 35 | 104-1635 | 6 | Bolt-Flange |
| 36 | 104-1636 | 1 | Bearing-Ball |
| 37 | 104-1637 | 1 | Bearing-Ball |
| 38 | 104-1638 | 2 | Spacer |
| 39 | 104-1639 | 1 | Gear-34 |
| 40 | 104-1640 | 1 | Shaft-Counter |
| 41 | 104-1641 | 1 | Case-Differential |
| 42 | 104-1642 | 2 | Gear-Side, Differential |
| 43 | 104-1643 | 2 | Pinion-Differential |
| 44 | 104-1644 | 1 | Shaft-Differential |
| 45 | 104-1645 | 1 | Pin |
| 46 | 104-1646 | 1 | Bearing-Ball |
| 47 | 104-1647 | 1 | Bearing-Needle |
| 48 | 104-1648 | 1 | Gear-62 |
| 49 | 104-1649 | 6 | Bolt |
| 50 | 104-1650 | 1 | Shaft-Axle, LH |
| 51 | 104-1651 | 1 | Shaft-Axle, RH |
| 52 | 104-1652 | 4 | Bearing-Ball |

| Ref | Part No. | Qty. | Description |
|---|---|---|---|
| 53 | 104-1653 | 1 | Case-Axle, LH |
| 54 | 104-1654 | 1 | Case-Axle, RH |
| 55 | 104-1655 | 4 | Ring-Snap |
| 56 | 104-1656 | 2 | Nut-Castle |
| 57 | 104-1657 | 2 | Ring-Snap |
| 58 | 104-6870 | 1 | Shaft-Shift, Complete |
| 59 | 104-1659 | 2 | Knock-Pipe |
| 60 | 104-1660 | 1 | Ball-Steel |
| 61 | 104-1661 | 1 | Spring |
| 62 | 104-1662 | 1 | Gasket |
| 63 | 104-1663 | 1 | Bolt |
| 64 | 104-1664 | 1 | Gasket |
| 65 | 104-1665 | 6 | Bolt-Flange |
| 66 | 104-1666 | 1 | Bolt-Flange |
| 68 | 104-6866 | 1 | Bolt |
| 69 | 104-6867 | 2 | Collar |
| 70 | 33004-00 | 11 | Nut-HF |
| 71 | 104-1671 | 2 | Bracket-Axle |
| 72 | 104-1672 | 1 | Nut-Lock |
| 73 | 104-1673 | 2 | Washer-Spring |
| 74 | 104-1674 | 2 | Washer |
| 75 | 104-1675 | 2 | Hub |
| 76 | 104-6860 | 1 | Lever-Select |
| 77 | 104-6869 | 2 | Bolt-Flange |
| 78 | 104-8649 | 10 | Stud |

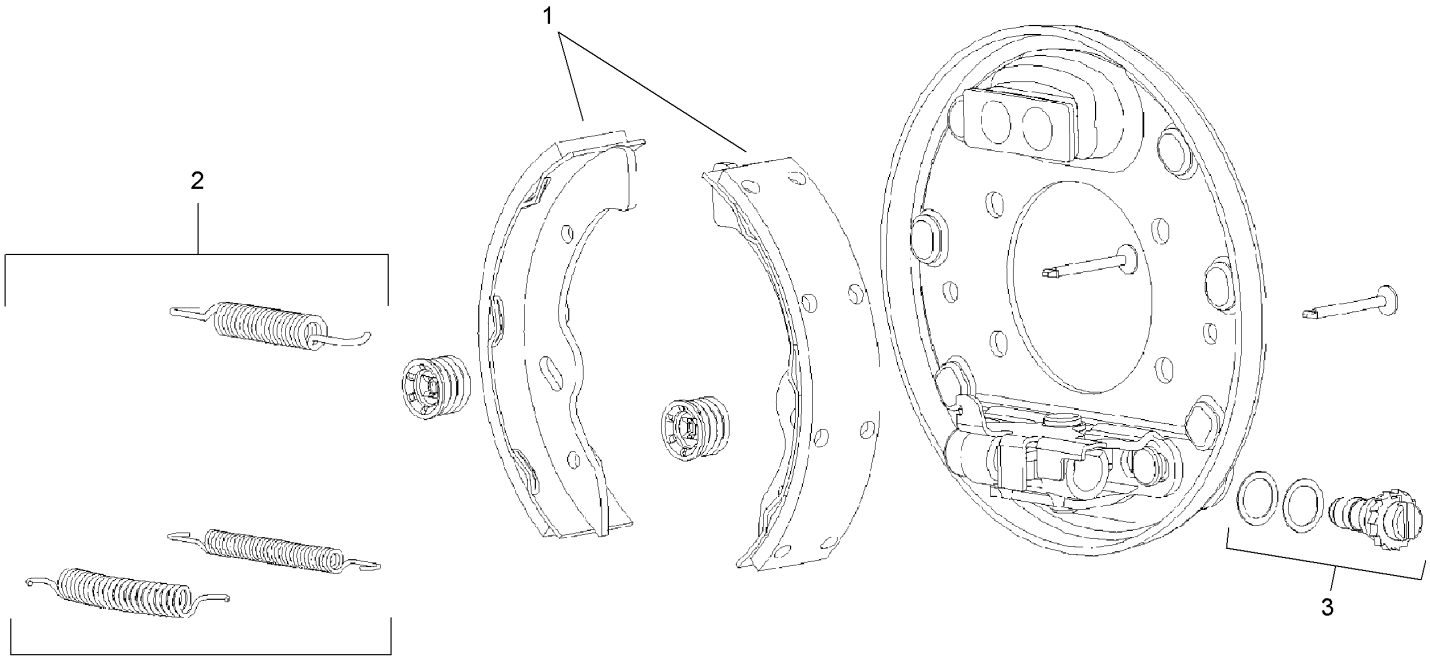


# Right Hand Brake Assembly No. 99-7136

| Ref | Part No. | Qty. | Description |
|---|---|---|---|
| 1 | 104-1243 | 1 | Shoe And Lining Kit |
| 2 | 104-1244 | 1 | Spring Kit |
| 3 | 104-1246 | 1 | RH Adjuster Kit |

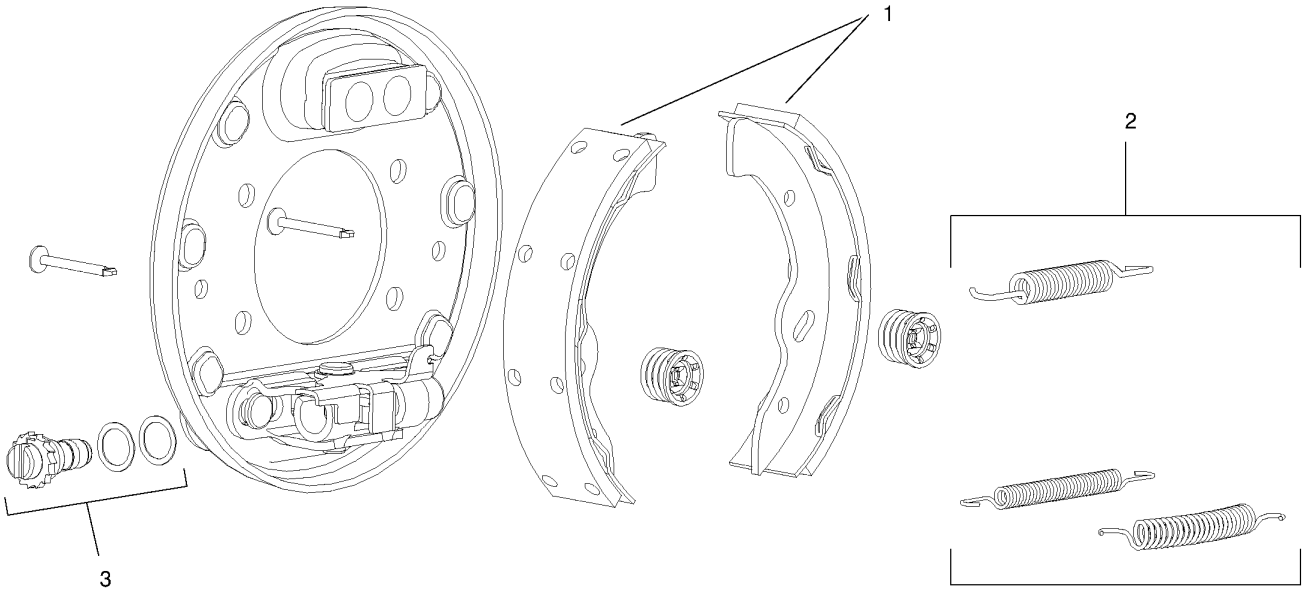


# Left Hand Brake Assembly No. 99-7137

| Ref | Part No. | Qty. | Description |
|---|---|---|---|
| 1 | 104-1243 | 1 | Shoe And Lining Kit |
| 2 | 104-1244 | 1 | Spring Kit |
| 3 | 104-1245 | 1 | LH Adjuster Kit |

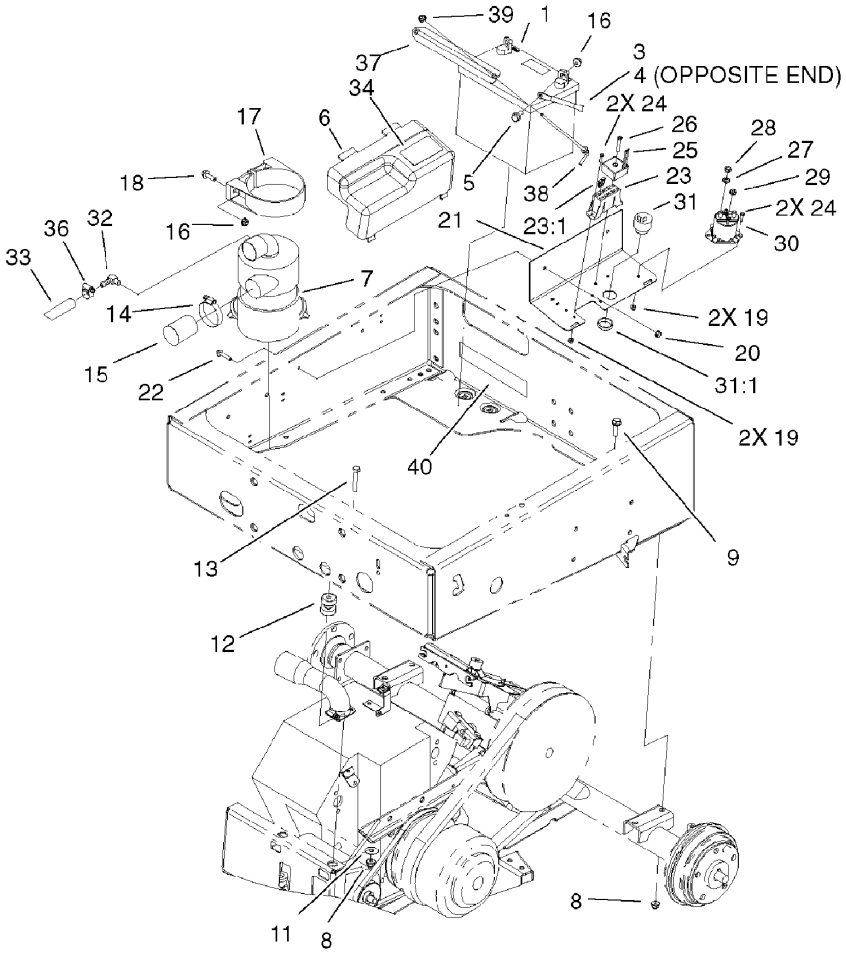


# Drivetrain Mount Assembly

| Ref | Part No. | Qty. | Description |
|---|---|---|---|
| 1 | 104-8162 | 1 | Battery |
| 3 | 99-7402 | 1 | Cable-Negitive |
| 4 | 99-7404 | 1 | Cable-Positive |
| 5 | 3234-5 | 2 | Screw-HHF |
| 6 | 99-7325 | 1 | Cover-Electrical |
| 7 | 99-7120 | 1 | Filter-Air |
| 8 | 104-8301 | 6 | Nut-Flange, NI |
| 9 | 3234-24 | 4 | Screw-HHF |
| 11 | 3256-35 | 2 | Washer-Flat |
| 12 | 95-2596 | 2 | Mount-Iso |
| 13 | 323-10 | 2 | Screw-HH |
| 14 | 2412-130 | 1 | Clamp-Hose |
| 15 | 104-6528 | 1 | Hose-Intake |
| 16 | 104-8300 | 4 | Nut-Flange, NI |
| 17 | 95-5806 | 1 | Bracket-Mounting |
| 18 | 3234-17 | 2 | Screw-HHF |
| 19 | 3296-2 | 5 | Nut-Lock |
| 20 | 32128-32 | 2 | Nut-HHF |
| 21 | 99-7051-03 | 1 | Mount-Component |
| 22 | 3234-21 | 2 | Screw-Cap |
| 23 | 107-0669 | 1 | Harness-Wire, Main |
| 23:1 | 218-578 | 3 | Fuse-10 Amp |
| ❶23:2 | 100-4918 | 1 | Diode |
| 24 | 32105-13 | 4 | Screw-SHH |

| Ref | Part No. | Qty. | Description |
|---|---|---|---|
| 25 | 104-6927 | 1 | Regulator |
| 26 | 32105-1 | 1 | Screw-SHH |
| 27 | 3255-8 | 2 | Washer-Lock |
| 28 | 3218-2 | 2 | Nut-Jam |
| 29 | 32149-8 | 2 | Nut-Keps |
| 30 | 99-7406 | 1 | Solenoid |
| 31 | 80-9330 | 1 | Alarm-Audio |
| 31:1 | 104-5107 | 1 | Nut-Plastic, Knurled |
| 32 | 99-7230 | 1 | Fitting-90 DEG |
| 33 | 94-5625 | 1 | Hose-Overflow, Radiator |
| 34 | 99-7352 | 1 | Decal-Information |
| 36 | 2412-36 | 2 | Clamp-Hose |
| 37 | 92-5018-03 | 1 | Clamp-Battery |
| 38 | 95-4042 | 2 | Hook-Retain, Battery |
| 39 | 104-7201 | 2 | Nut-HF |
| 40 | 104-7102 | 1 | Pad-Battery |

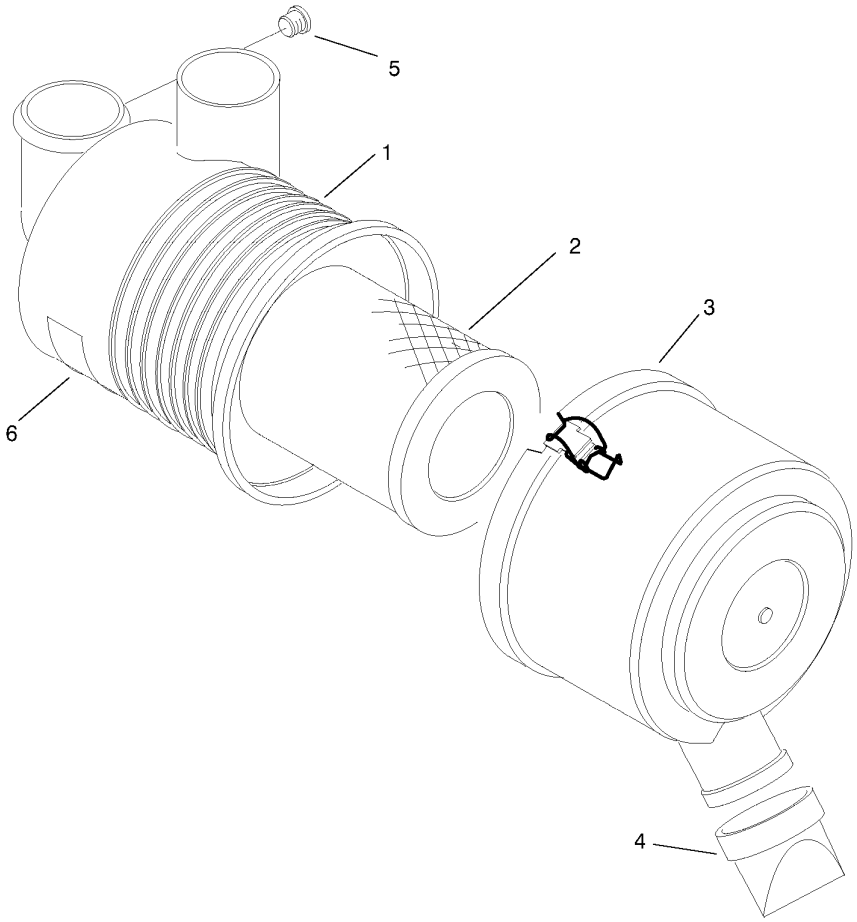


# Air Cleaner Assembly No. 99-7120

| Ref | Part No. | Qty. | Description |
|---|---|---|---|
| ❷1 | | 1 | Body |
| 2 | 93-2195 | 1 | Filter |
| 3 | 94-3652 | 1 | Cover ASM |
| 4 | 87-9400 | 1 | Valve-Vacuator |
| ❷5 | | 1 | Plug |
| ❷6 | | 1 | Marking |

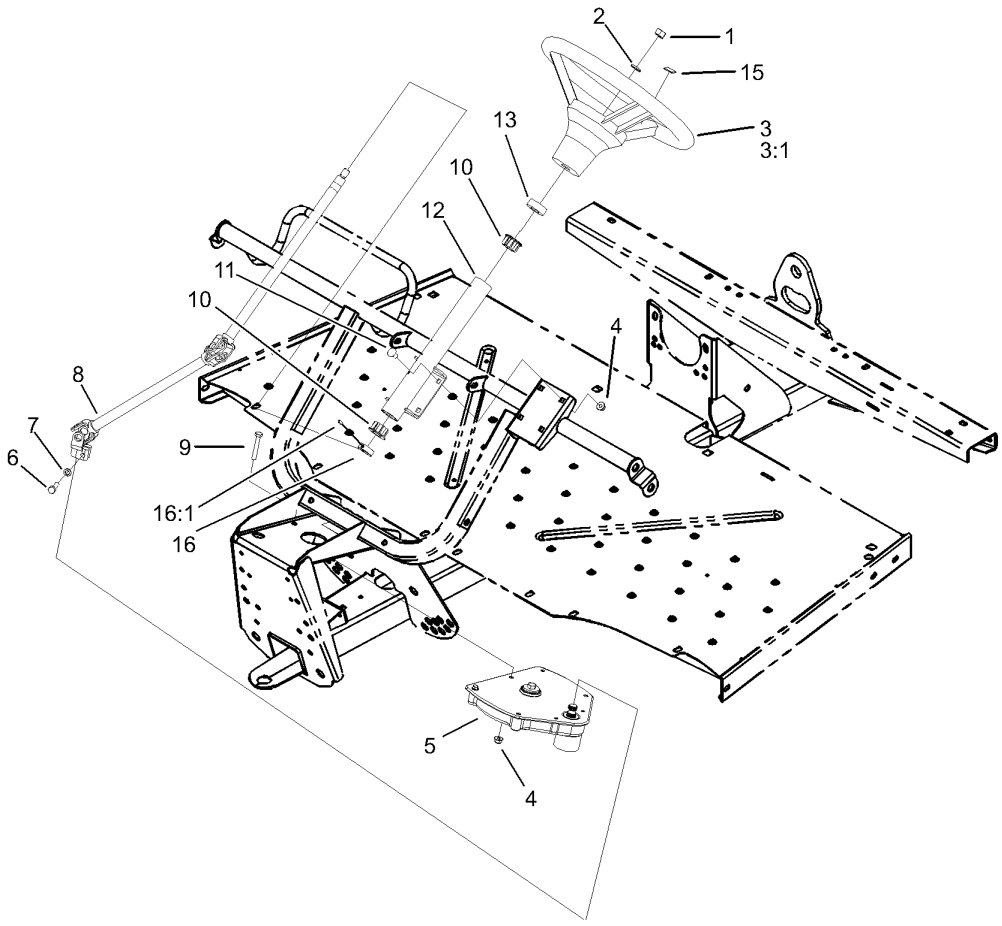


# Upper Steering Assembly

| Ref | Part No. | Qty. | Description |
|---|---|---|---|
| 1 | 3277-1 | 1 | Nut-Hex |
| 2 | 48-8070 | 1 | Washer-Lock |
| 3 | 98-1471 | 1 | Wheel-Steering |
| 3:1 | 98-1468 | 1 | Cover-Wheel, Steering |
| 4 | 104-8300 | 7 | Nut-Flange, NI |
| 5 | 99-7660 | 1 | Steering Gearbox ASM |
| 6 | 48-7730 | 1 | Screw-HH |
| 7 | 3253-4 | 1 | Washer-Lock |
| 8 | 99-7653 | 1 | Shaft-Steering |
| 9 | 322-10 | 3 | Screw-HH |
| 10 | 93-1146 | 2 | Bushing-Upper, Steering |
| 11 | 3230-1 | 4 | Bolt-CARR |
| 12 | 99-7651-03 | 1 | Column-Steering |
| 13 | 21-9260 | 1 | Cover-Dust |
| 15 | 98-1459 | 1 | Decal |
| 16 | 111383 | 1 | Collar |
| 16:1 | 3245-32 | 1 | Screw-HSH |

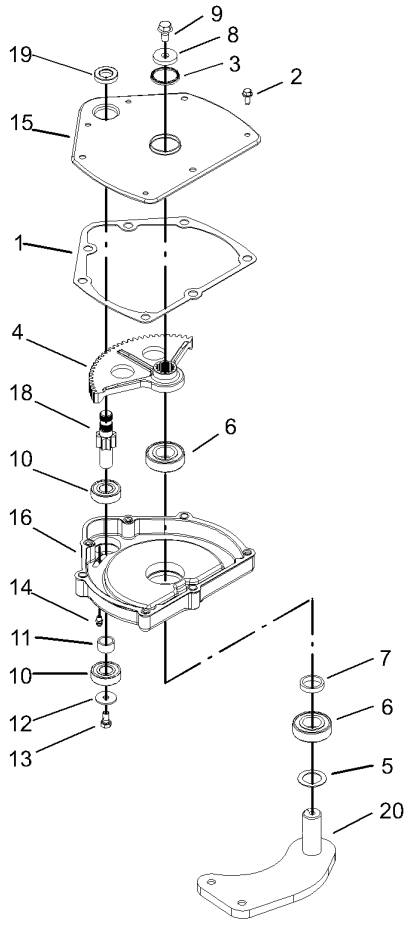


# Steering Gearbox Assembly No. 99-7660

| Ref | Part No. | Qty. | Description |
|---|---|---|---|
| 1 | 94-2135 | 1 | Gasket |
| 2 | 32144-10 | 4 | Screw-HWH |
| 3 | 103118 | 1 | Seal |
| 4 | 99-7843 | 1 | Sector-Gear |
| 5 | 3256-42 | 1 | Washer-Flat |
| 6 | 251-82 | 2 | Bearing-Ball |
| 7 | 94-2218 | 1 | Spacer-Shaft, Output |
| 8 | 104-6563 | 1 | Washer-Stepped |
| 9 | 104-7156 | 1 | Screw-HHF |
| 10 | 38-7820 | 2 | Bearing-Ball |
| 11 | 94-2217 | 1 | Spacer-Shaft, Input |
| 12 | 1-613235 | 1 | Washer |
| 13 | 98-3498 | 1 | Screw-HH |
| 14 | 302-5 | 1 | Fitting-Grease |
| 15 | 99-7656-03 | 1 | Cover-Housing, Steering |
| 16 | 99-7658 | 1 | Housing-Steering |
| 18 | 99-7650 | 1 | Gear-Pinion |
| 19 | 99-7657 | 1 | Seal-Oil |
| 20 | 99-7601-03 | 1 | Arm-Pitman |

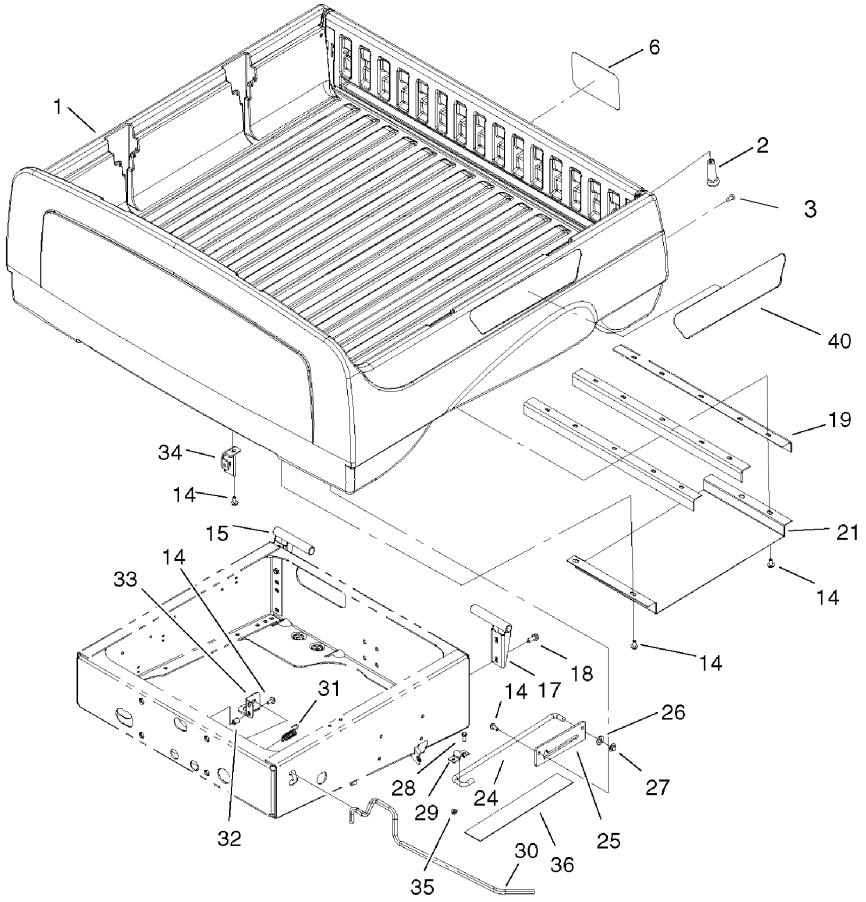


# Box and Tailgate Installation Assembly

| Ref | Part No. | Qty. | Description |
|---|---|---|---|
| ❶1 | | 1 | Box And Tailgate ASM |
| 2 | 99-7984 | 2 | Knob-Soft Grip, Push-On |
| 3 | 87-8460 | 2 | Bumper-Rubber |
| 6 | 104-7213 | 1 | Decal |
| 14 | 3234-5 | 18 | Screw-HHF |
| 15 | 99-7309-03 | 1 | RH Pivot Bracket ASM |
| 17 | 99-7308-03 | 1 | LH Pivot Bracket ASM |
| 18 | 3234-11 | 4 | Screw-HHF |
| 19 | 99-7864-03 | 3 | Brace-Box |
| 21 | 99-7870 | 1 | Shield-Heat |
| 24 | 99-7895 | 1 | Rod-Prop |
| 25 | 99-7894 | 1 | Bracket-Rod, Prop |
| 26 | 3256-26 | 1 | Washer-Flat |
| 27 | 32112-14 | 1 | Nut-Push |
| 28 | 3234-17 | 2 | Screw-HHF |
| 29 | 99-7896 | 1 | Bracket-U, Prop Rod |
| 30 | 99-7745 | 1 | Rod-Latch |
| 31 | 5-7290 | 1 | Spring-Tension |
| 32 | 32148-7 | 2 | Nut-Insert |
| 33 | 99-7744-03 | 1 | Bracket-Latch |
| 34 | 99-7742-03 | 1 | Hook-Latch, RH |
| 35 | 104-8300 | 2 | Nut-Flange, NI |
| 36 | 104-6859 | 1 | Shield-Heat |
| 40 | 104-7265 | 2 | Decal |

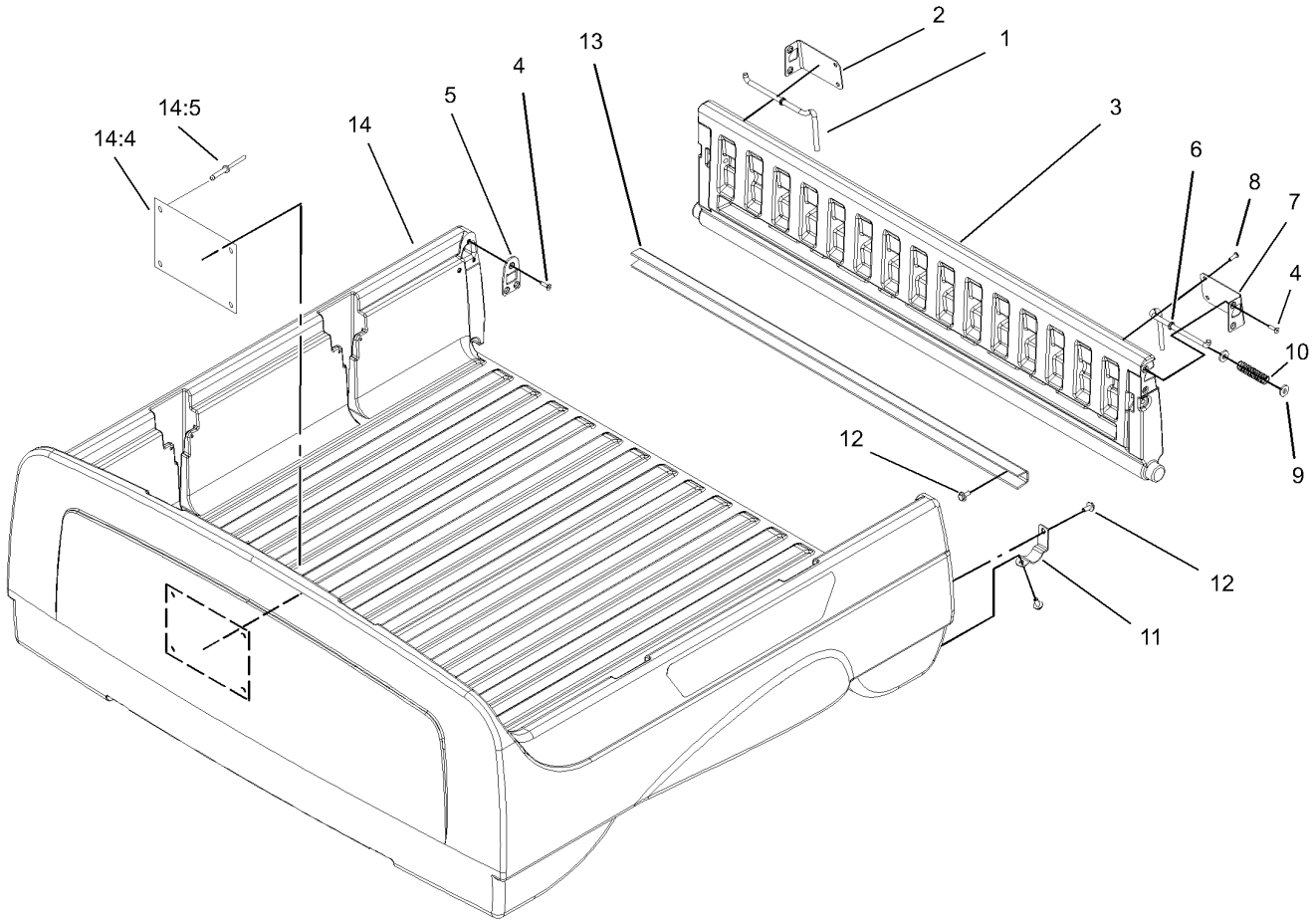


# Box and Tailgate Assembly

| Ref | Part No. | Qty. | Description |
|---|---|---|---|
| 1 | 99-7860 | 1 | Rod-Latch, Right |
| 2 | 99-7858 | 1 | Bracket-Tailgate Latch, Right |
| 3 | 99-7893 | 1 | Tailgate ASM |
| 4 | 99-7334 | 10 | Screw |
| 5 | 99-7852 | 2 | Plate-Striker |
| 6 | 99-7859 | 1 | Rod-Latch, Left |
| 7 | 99-7857 | 1 | Bracket-Tailgate Latch, Left |
| 8 | 99-7335 | 4 | Screw |
| 9 | 99-7861 | 4 | Washer-Latch |
| 10 | 61-8880 | 2 | Spring |
| 11 | 99-7286 | 2 | Bracket-Pivot, Tailgate |
| 12 | 3234-5 | 10 | Screw-HHF |
| 13 | 99-7867 | 1 | Channel-Tailgate |
| 14 | 104-7203 | 1 | Box ASM |
| 14:4 | 99-7954 | 1 | Decal-No Riders |
| 14:5 | 3290-415 | 4 | Rivet |

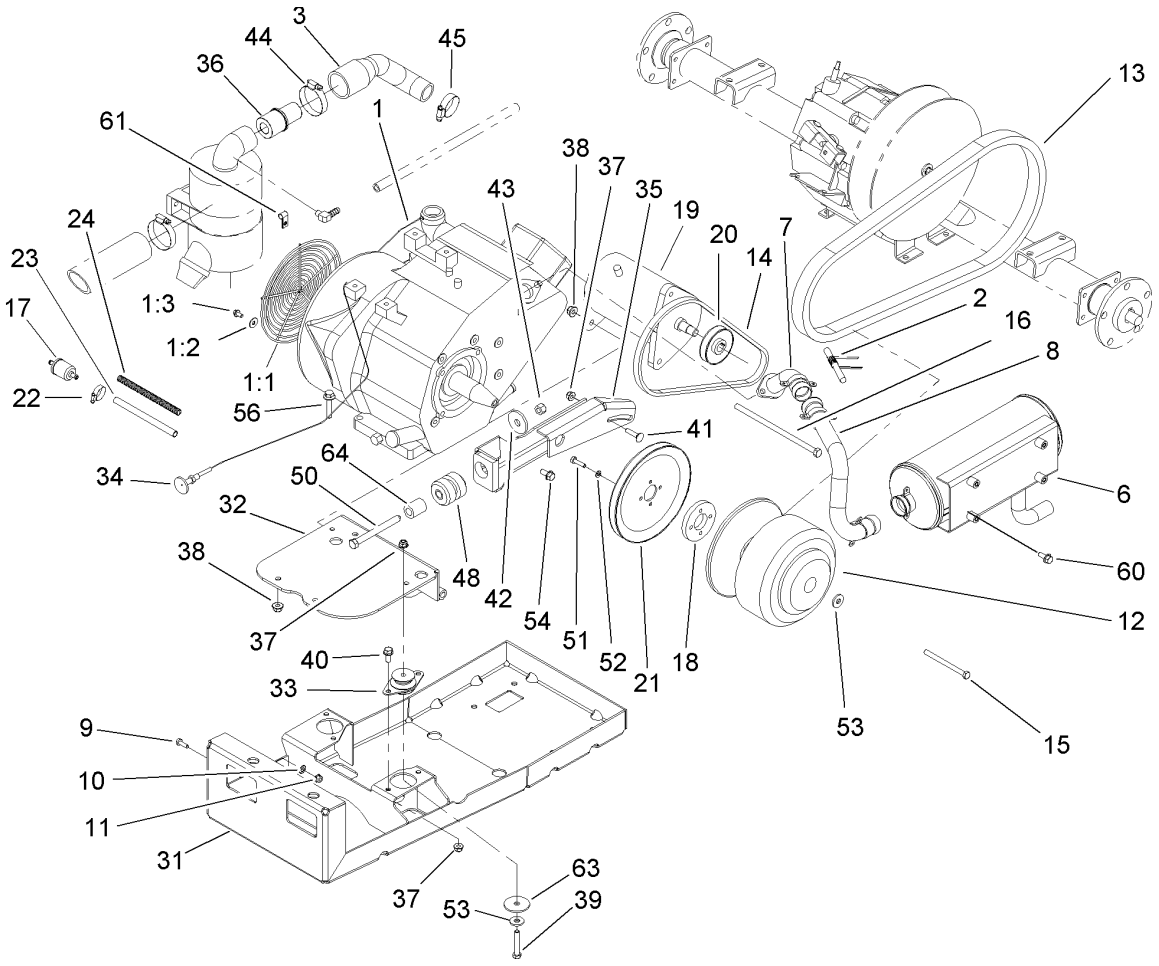


# Engine and Clutch Assembly

| Ref | Part No. | Qty. | Description |
|---|---|---|---|
| 1 | 104-6565 | 1 | Engine-Kohler, Cs12 Pa-941621 |
| 1:1 | 104-6538 | 1 | Guard-Flywheel |
| 1:2 | 104-6547 | 4 | Washer-Flat |
| 1:3 | 104-6548 | 4 | Screw-Flange |
| 2 | 104-6478 | 4 | Spring-Coupler, Exhaust |
| 3 | 104-6495 | 1 | Hose-Intake |
| 6 | 104-6510 | 1 | Muffler |
| 7 | 104-6511 | 1 | Manifold |
| 8 | 104-6512 | 1 | Coupler-Exhaust |
| 9 | 321-4 | 1 | Screw-HH |
| 10 | 3255-8 | 1 | Washer-Lock |
| 11 | 32128-32 | 1 | Nut-HHF |
| 12 | 99-7103 | 1 | Clutch-Drive |
| 13 | 99-7143 | 1 | Belt-Drive |
| 14 | 99-7132 | 1 | V-Belt-Starter |
| 15 | 99-7200 | 1 | Screw-HH |
| 16 | 323-30 | 1 | Screw-HH |
| 17 | 94-2690 | 1 | Filter-Fuel |
| 18 | 99-7064 | 1 | Spacer-Starter |
| 19 | 99-7108 | 1 | Generator-Starter |
| 20 | 99-7130 | 1 | Pulley-Starter |
| 21 | 99-7131 | 1 | Pulley-Engine |
| 22 | 2412-98 | 3 | Clamp |
| 23 | 47-2963 | 1 | Hose-Fuel |

| Ref | Part No. | Qty. | Description |
|---|---|---|---|
| 24 | 99-7377 | 1 | Conduit-Line, Fuel |
| ❶25 | 104-6928 | 1 | Cable-Positive |
| ❶26 | 107-0671 | 1 | Harness-Wire |
| ❶27 | 99-7403 | 1 | Cable-Negitive |
| ❶29 | 99-7405 | 1 | Cable-Negative |
| 31 | 104-6521-03 | 1 | Mount-Engine |
| 32 | 104-6525-03 | 1 | Base-Engine |
| 33 | 104-6562 | 2 | Mount-Iso |
| 34 | 104-6507 | 1 | Cable-Choke, Kohler |
| 35 | 104-6516-03 | 1 | Bracket-Starter |
| 36 | 104-6531 | 1 | Restrictor-Intake |
| 37 | 104-8300 | 7 | Nut-Flange, NI |
| 38 | 104-8301 | 5 | Nut-Flange, NI |
| 39 | 322-11 | 2 | Screw-HH |
| 40 | 3234-5 | 4 | Screw-HHF |
| 41 | 3230-3 | 1 | Screw-CARR |
| 42 | 84-1560 | 1 | Washer-Thrust |
| 43 | 3296-48 | 1 | Nut-Lock, NI |
| 44 | 2412-130 | 1 | Clamp-Hose |
| 45 | 2412-3 | 1 | Clamp-Hose |
| 48 | 87-4970 | 1 | Engine Mount ASM |
| 50 | 104-6561 | 1 | Screw-HH |
| 51 | 321-6 | 4 | Screw-HH |
| 52 | 3253-3 | 4 | Washer-Lock |

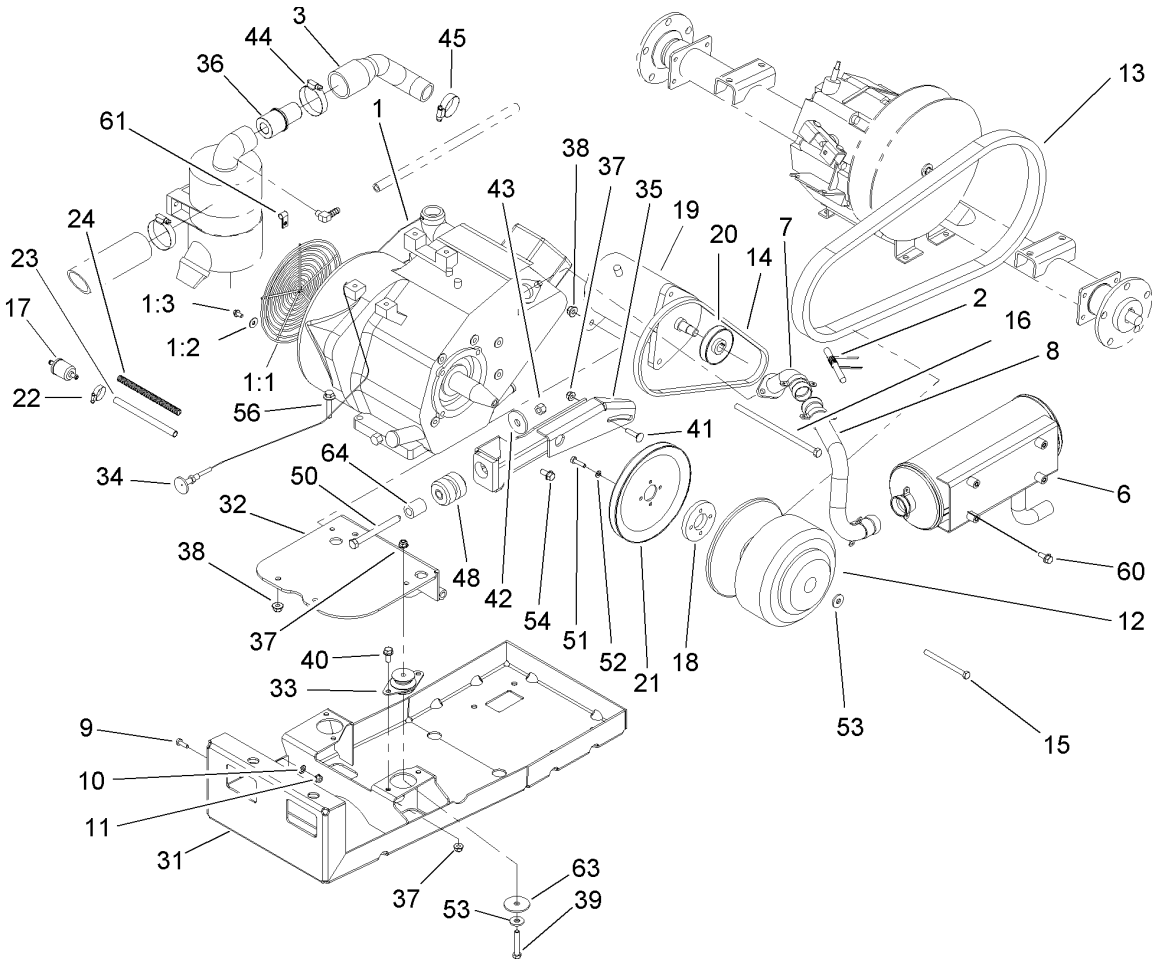


# Engine and Clutch Assembly (continued)

| Ref | Part No. | Qty. | Description |
|---|---|---|---|
| 53 | 5-0838 | 3 | Washer |
| 54 | 104-6560 | 2 | Screw-HH |
| 56 | 3234-19 | 4 | Screw-HHF |
| 60 | 3234-5 | 4 | Screw-HHF |
| 61 | 2412-89 | 1 | Clamp |
| 63 | 63-7400 | 2 | Washer-Rebound |
| 64 | 104-6557 | 1 | Spacer-Frame |

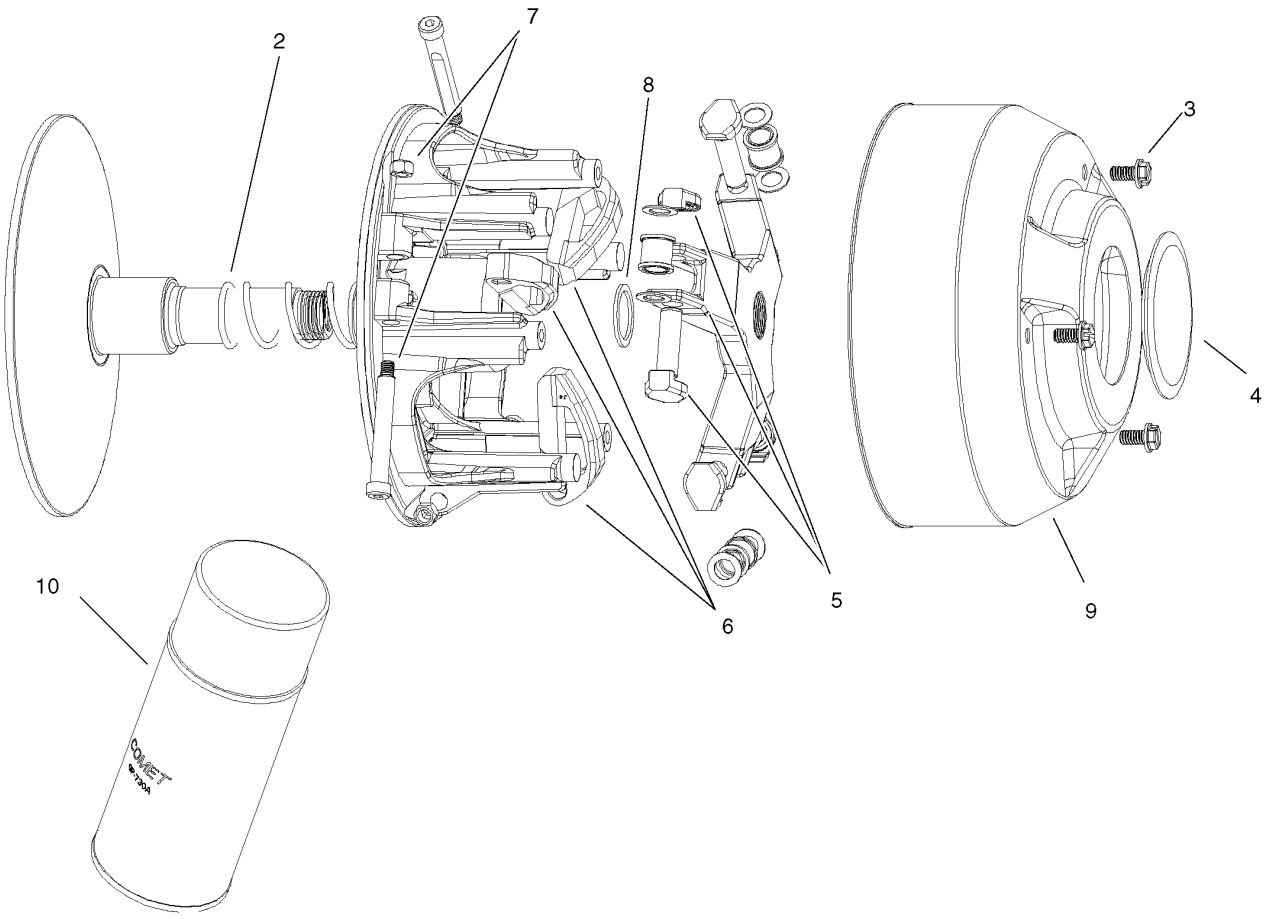


# Drive Clutch Assembly No. 99-7103

| Ref | Part No. | Qty. | Description |
|---|---|---|---|
| 2 | 104-1686 | 1 | Spring |
| 3 | 3234-26 | 3 | Screw |
| 4 | 104-1690 | 1 | Cap |
| 5 | 104-1697 | 1 | Spider Roller Kit |
| 6 | 104-7044 | 1 | Cam Arm (Set Of 3) |
| 7 | 104-4256 | 1 | Pivot Bolt And Nut Kit |
| 8 | 104-1687 | 1 | Spacer |
| 9 | 104-7045 | 1 | Cover-Clutch |
| 10 | 104-7011 | 1 | Lubricant-Dry |

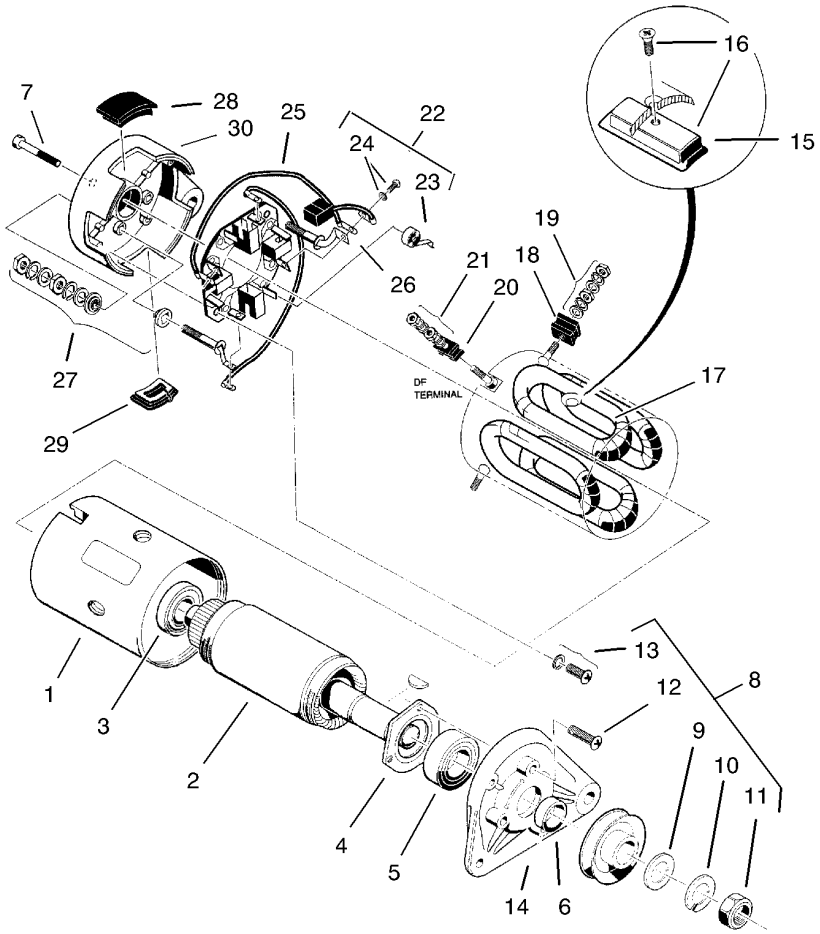


# Starter Generator Assembly No. 99-7108

| Ref | Part No. | Qty. | Description |
|---|---|---|---|
| ❷1 | | 1 | Yoke |
| 2 | 104-1210 | 1 | Armature Kit |
| 3 | 104-1211 | 1 | Bearing-Ball, Rear |
| 4 | 104-1212 | 1 | Retainer |
| 5 | 104-1213 | 1 | Bearing-Ball, Front |
| 6 | 104-1214 | 1 | Spacer |
| 7 | 104-1215 | 2 | Bolt |
| ❷8 | | 1 | Nut And Screw Set |
| 9 | 104-1216 | 1 | Washer-Plain |
| 10 | 104-1217 | 1 | Washer-Spring |
| 11 | 104-1218 | 1 | Nut-Hex |
| ❷12 | | 3 | Screw-Flange |
| 13 | 104-1219 | 2 | Set-Screw |
| 14 | 104-1220 | 1 | Bracket-Front |
| ❷15 | | 4 | Pole |
| 16 | 104-1221 | 1 | Set-Pole And Screw |
| 17 | 104-1222 | 1 | Field Stator Coil ASM |
| ❷18 | | 2 | F Mold |
| 19 | 104-1223 | 2 | Set-Screw |
| ❷20 | | 1 | D F Mold |
| 21 | 104-1224 | 1 | Set-Screw |
| 22 | 104-1225 | 1 | Brush Holder Kit |
| 23 | 104-1226 | 4 | Spring-Brush |
| 24 | 104-1227 | 1 | Brush And Screw Set |

| Ref | Part No. | Qty. | Description |
|---|---|---|---|
| ❷25 | | 2 | Brush Connector ASM |
| ❷26 | | 2 | A Terminal ASM |
| 27 | 104-1228 | 2 | Screw And Mold ASM |
| ❷28 | | 1 | Cover Set |
| ❷29 | | 1 | Cover B |
| ❷30 | | 1 | Bracket-Rear |

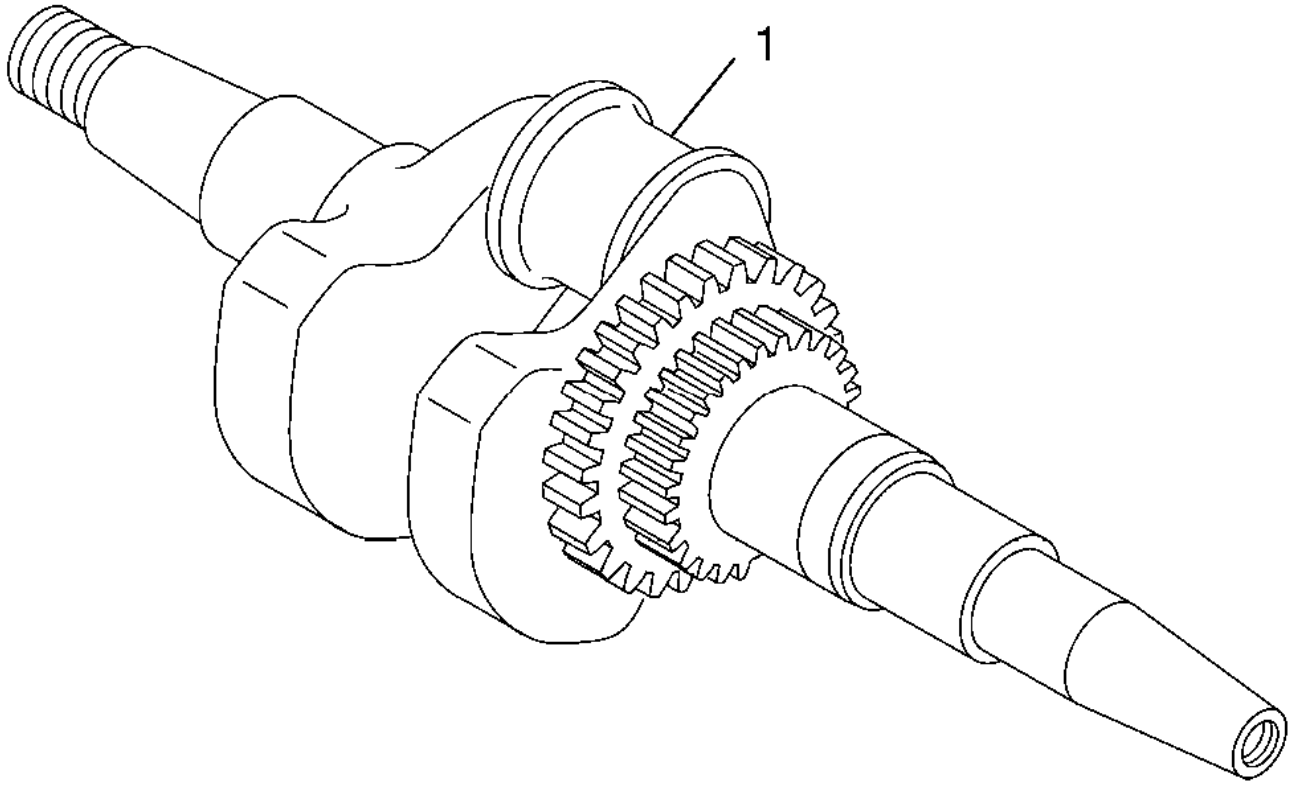


# Crankshaft Assembly
# Kohler CS12 PA-941621

| Ref | Part No. | Qty. | Description |
|---|---|---|---|
| ❸1 | 63 014 17-S | 1 | Crankshaft |

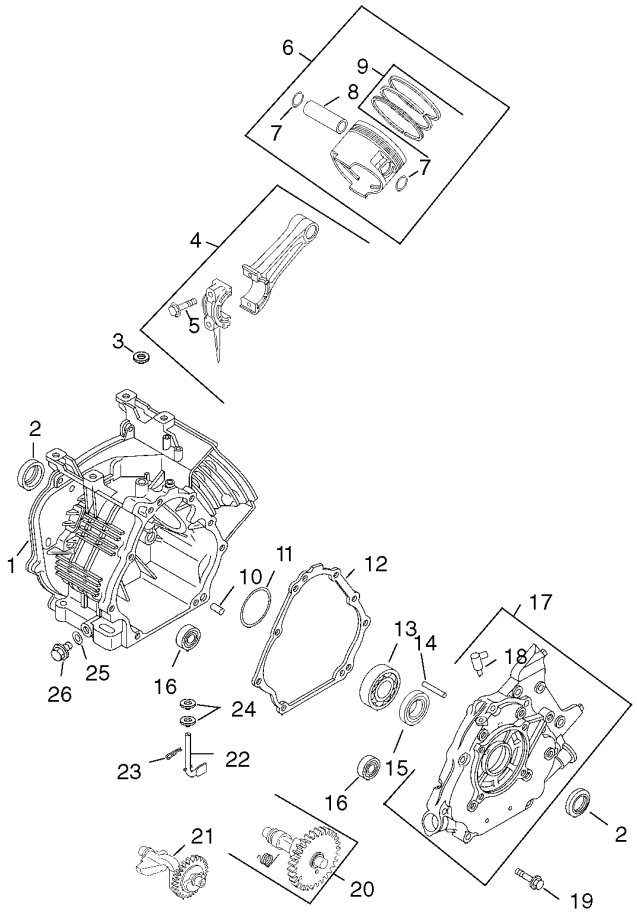


# Crankcase Assembly
# Kohler CS12 PA-941621

| Ref | Part No. | Qty. | Description |
|---|---|---|---|
| ❸1 | 63 561 20-S | 1 | Crankcase |
| ❸2 | 63 032 02-S | 2 | Seal-Oil |
| ❸3 | 63 032 03-S | 1 | Seal-Shaft, Governor Cross |
| ❸4 | 63 067 01-S | 1 | Rod-Connecting |
| ❸5 | 63 211 01-S | 2 | Bolt, Connecting Rod |
| ❸6 | 63 874 04-S | 1 | Piston W/Ring Set (STD.)(Includes 7-9) |
| ❸ | 63 874 05-S | 1 | Set-Piston W/Ring (.25) |
| ❸ | 63 874 06-S | 1 | Set-Piston W/Ring (.50) |
| ❸7 | 63 018 02-S | 2 | Retainer-Pin, Piston |
| ❸8 | 63 380 02-S | 1 | Pin, Piston |
| ❸9 | 63 108 01-S | 1 | Set-Ring (STD.) |
| ❸ | 63 108 02-S | 1 | Set-Ring (.25) |
| ❸ | 63 108 03-S | 1 | Set-Ring (.50) |
| ❸10 | 63 380 04-S | 2 | Pin-Dowel |
| ❸11 | 63 422 01-S | 1 | Shim-Crankshaft |
| ❸12 | 63 041 07-S | 1 | Gasket-Plate, Closure |
| ❸13 | 63 030 01-S | 1 | Bearing |
| ❸14 | 63 144 03-S | 1 | Shaft-Governor |
| ❸15 | 63 030 03-S | 1 | Bearing |
| ❸16 | 63 030 02-S | 2 | Bearing |
| ❸17 | 63 009 12-S | 1 | Plate, Closure (Includes 16) |
| ❸18 | 63 155 01-S | 1 | Connector |
| ❸19 | 63 086 31-S | 8 | Screw-Plate, Closure |

| Ref | Part No. | Qty. | Description |
|---|---|---|---|
| ❸20 | 63 012 04-S | 1 | Camshaft (Includes 21) |
| ❸21 | 63 089 01-S | 1 | Spring-Acr |
| ❸22 | 63 144 16-S | 1 | Shaft, Balance |
| ❸23 | 63 144 01-S | 1 | Shaft-Cross, Governor |
| ❸24 | 63 154 01-S | 1 | Clip |
| ❸25 | 63 468 03-S | 2 | Washer |
| ❸26 | 63 041 01-S | 2 | Gasket-Plug |
| ❸27 | 63 139 01-S | 2 | Plug-Drain |

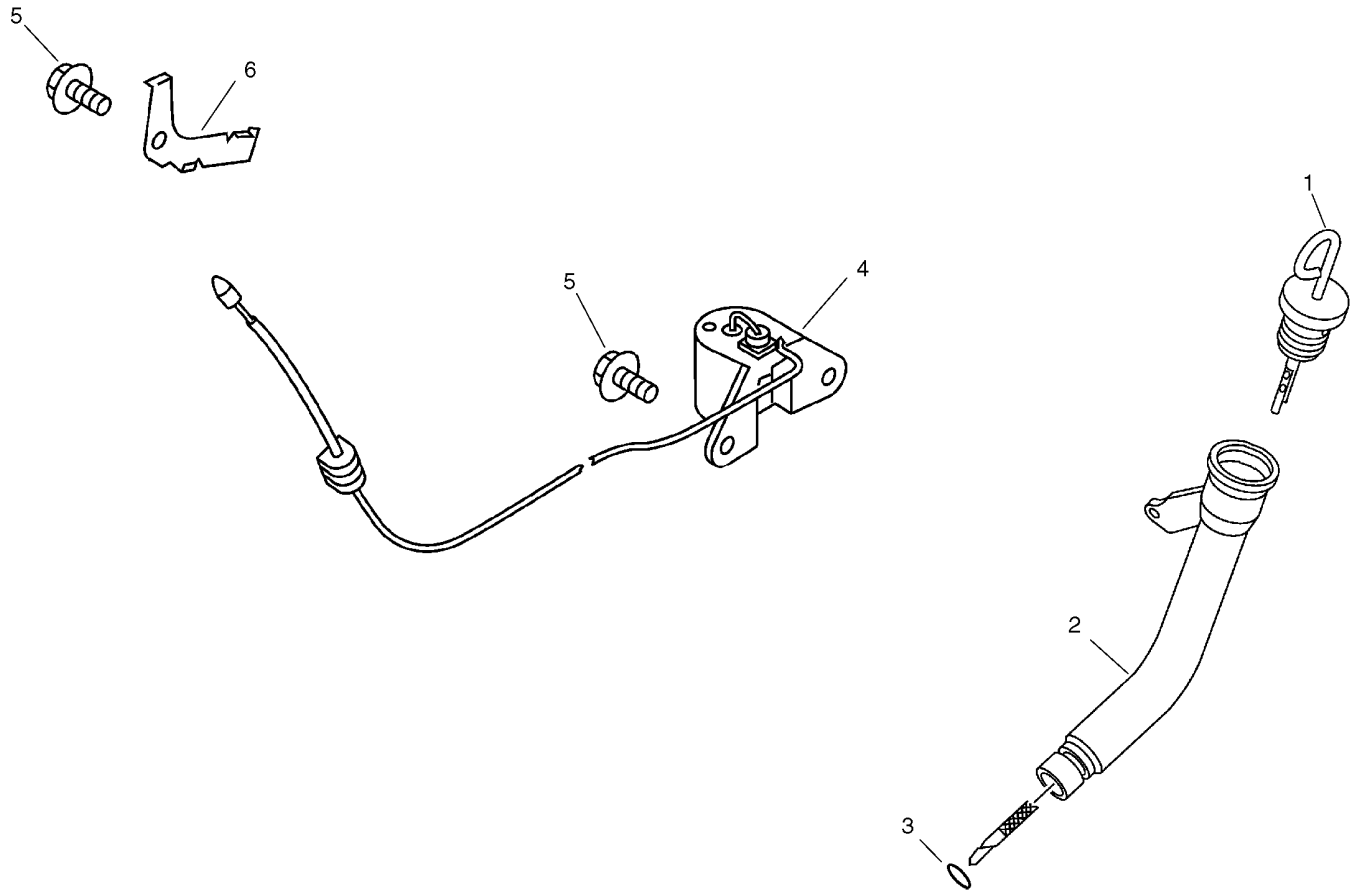


# Oil Pan and Lubrication Assembly
# Kohler CS12 PA-941621

| Ref | Part No. | Qty. | Description |
|---|---|---|---|
| ❸1 | 63 038 02-S | 1 | Dipstick |
| ❸2 | 63 123 01-S | 1 | Tube-Dipstick |
| ❸3 | 63 153 10-S | 1 | O-Ring-Tube, Dipstick |
| ❸4 | 63 099 01-S | 1 | Switch-Level, Oil |
| ❸5 | 63 086 14-S | 3 | Screw |
| ❸6 | 63 237 01-S | 1 | Clamp |

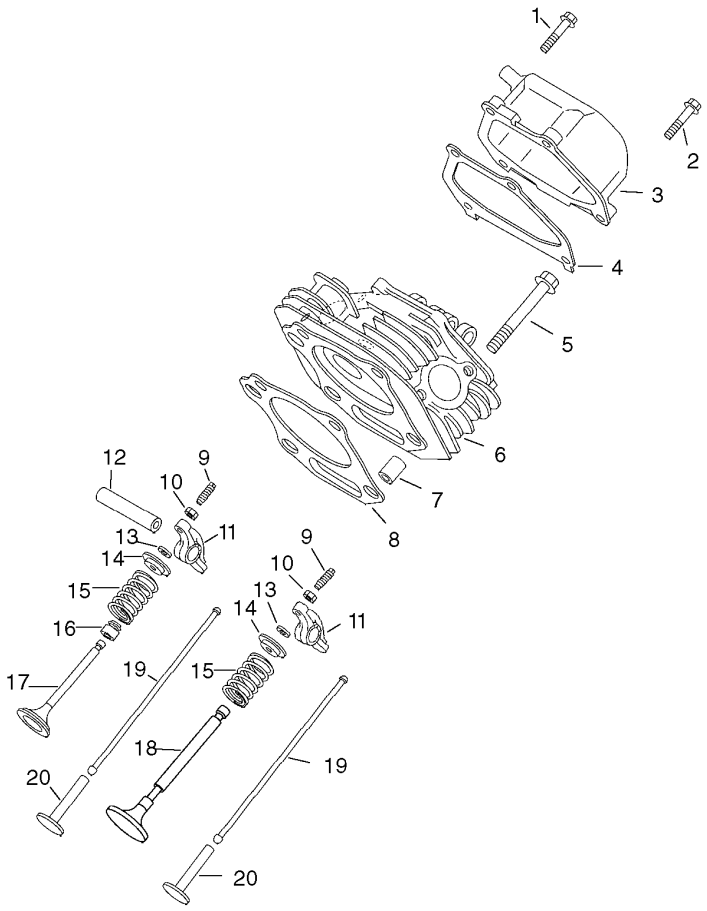


# Head, Valve and Breather Assembly
# Kohler CS12 PA-941621

| Ref | Part No. | Qty. | Description |
|---|---|---|---|
| ❸1 | 63 086 02-S | 3 | Screw-Cover, Valve |
| ❸2 | 63 086 44-S | 1 | Screw-Cover, Valve |
| ❸3 | 63 096 18-S | 1 | Cover, Valve |
| ❸4 | 63 041 04-S | 1 | Gasket-Cover, Valve |
| ❸5 | 63 086 01-S | 4 | Screw-Head, Cylinder |
| ❸6 | 63 318 07-S | 1 | Head, Cylinder |
| ❸7 | 63 380 03-S | 2 | Pin-Dowel |
| ❸8 | 63 041 44-S | 1 | Gasket, Cylinder Head |
| ❸9 | 63 086 05-S | 2 | Screw-Adjusting, Valve |
| ❸10 | 63 100 02-S | 2 | Nut |
| ❸11 | 63 186 01-S | 2 | Arm-Rocker |
| ❸12 | 63 144 06-S | 1 | Shaft-Arm, Rocker |
| ❸13 | 63 462 01-S | 2 | Keeper-Valve |
| ❸14 | 63 173 01-S | 2 | Cap-Spring, Valve |
| ❸15 | 63 089 05-S | 2 | Spring-Valve |
| ❸16 | 63 032 01-S | 1 | Seal-Stem, Valve |
| ❸17 | 63 017 01-S | 1 | Valve-Intake |
| ❸18 | 63 016 01-S | 1 | Valve-Exhaust |
| ❸19 | 63 411 01-S | 2 | Rod-Push |
| ❸20 | 63 351 01-S | 2 | Lifter-Valve |

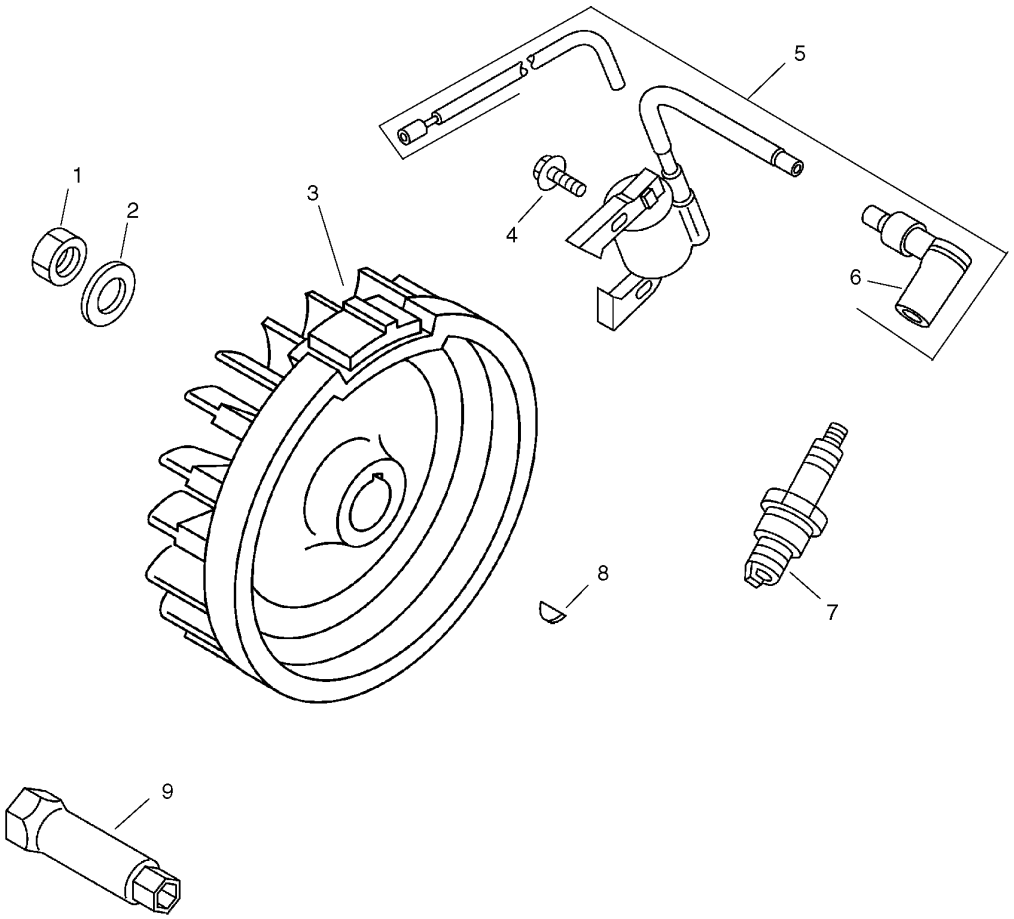


# Ignition and Electrical Assembly
# Kohler CS12 PA-941621

| Ref | Part No. | Qty. | Description |
|---|---|---|---|
| ❸1 | 63 100 04-S | 1 | Nut-Flywheel |
| ❸2 | 63 468 06-S | 1 | Washer-Flywheel |
| ❸3 | 63 025 12-S | 1 | Flywheel |
| ❸4 | 63 086 13-S | 2 | Screw |
| ❸5 | 63 755 19-S | 1 | Kit, Ignition Module |
| ❸6 | 63 173 02-S | 1 | Cap-Plug, Spark |
| ❸7 | 63 132 01-S | 1 | Plug-Spark |
| ❸8 | 63 340 02-S | 1 | Key-Woodruff |
| ❸9 | 63 213 01-S | 1 | Wrench-Plug, Spark |

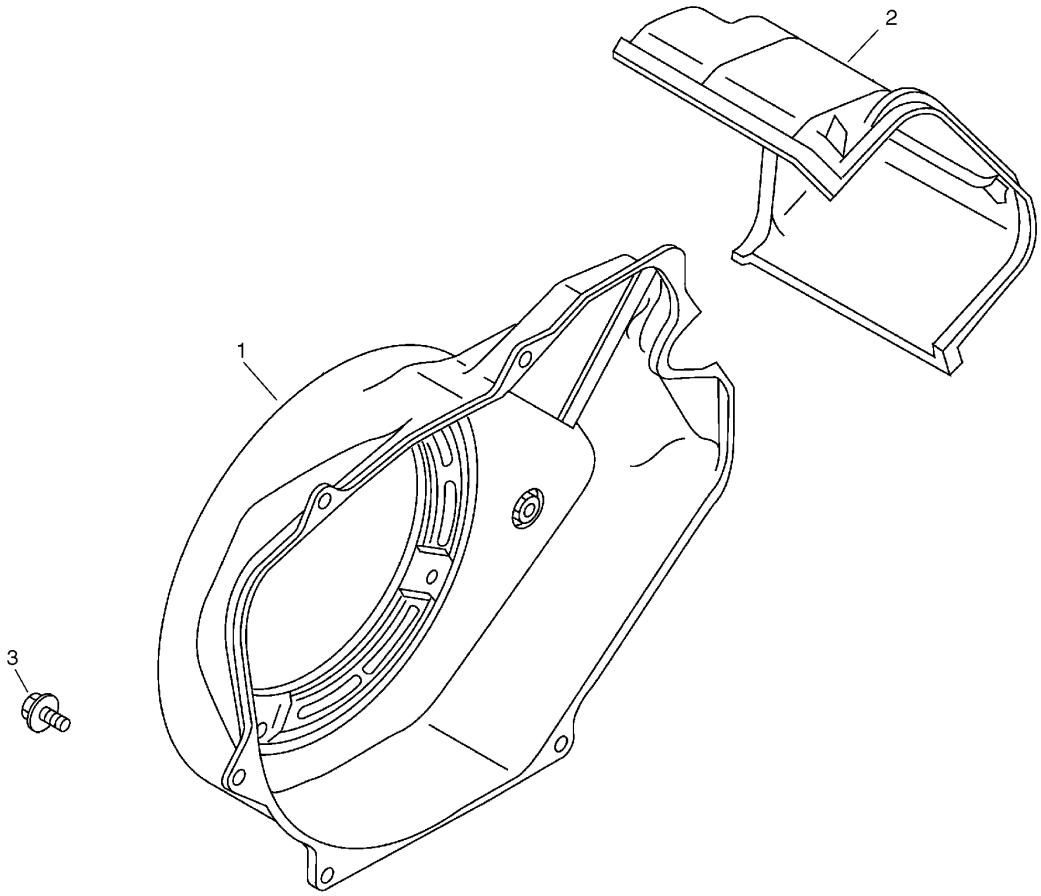


# Blower Housing and Baffle Assembly
# Kohler CS12 PA-941621

| Ref | Part No. | Qty. | Description |
|---|---|---|---|
| ❸1 | 63 027 07-S | 1 | Housing, Blower |
| ❸2 | 63 063 01-S | 1 | Baffle-Cylinder |
| ❸3 | 63 086 14-S | 6 | Screw |

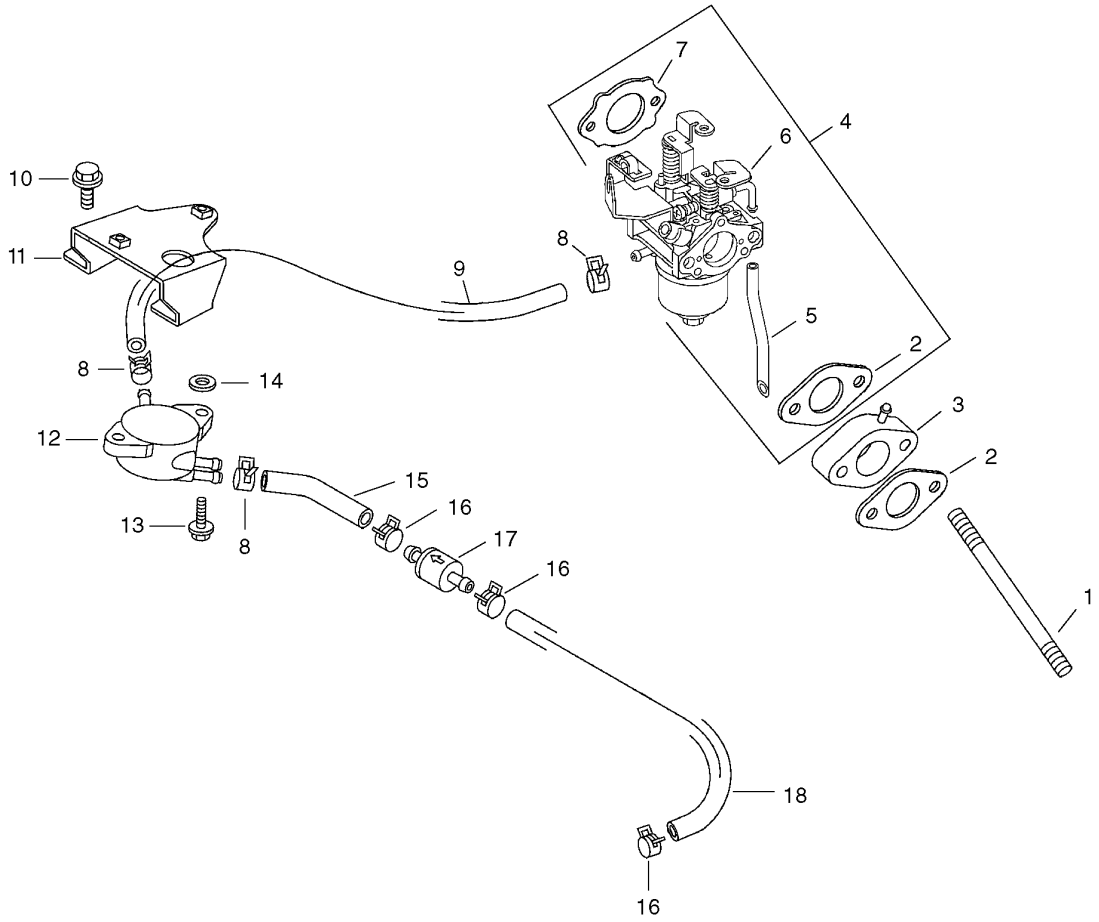


# Fuel System Assembly
# Kohler CS12 PA-941621

| Ref | Part No. | Qty. | Description |
|---|---|---|---|
| 1 | 63 072 06-S | 2 | Stud-Carburetor |
| 2 | 63 041 13-S | 2 | Gasket-Intake |
| 3 | 63 164 01-S | 1 | Manifold-Intake |
| 4 | 63 853 22-S | 1 | Kit, Carburetor W/Gaskets (Incl. 2 [qty 1], 5, 6) |
| 5 | 63 053 22 | 1 | Carburetor ASM (For Information Only Not Available Separately)(Service With: 63 757 02-S, 63 757 10-S) |
| 6 | 63 041 08-S | 1 | Gasket-Cleaner, Air |
| 7 | 63 154 07-S | 3 | Clip |
| 8 | 63 353 07-S | 1 | Hose-Pump To Carburetor |
| 9 | 63 086 21-S | 2 | Screw-Bracket |
| 10 | 63 126 22-S | 1 | Bracket-Pump, Fuel |
| 11 | 63 393 01-S | 1 | Pump-Fuel |
| 12 | 63 086 81-S | 2 | Screw-Fuel Pump To Bracket |
| 13 | 63 041 45-S | 2 | Gasket-Pump, Fuel |
| 14 | 63 353 06-S | 1 | Hose-Filter To Pump |
| 15 | 63 237 19-S | 3 | Clamp-Line, Vacuum |
| 16 | 63 050 06-S | 1 | Filter-Line, Vacuum |
| 17 | 63 353 08-S | 1 | Hose-Vacuum, Crankcase To Filter |
| ❶ | 63 757 02-S | 1 | Kit-Float |
| ❶ | 63 757 10-S | 1 | Kit-Repair, Carburetor |

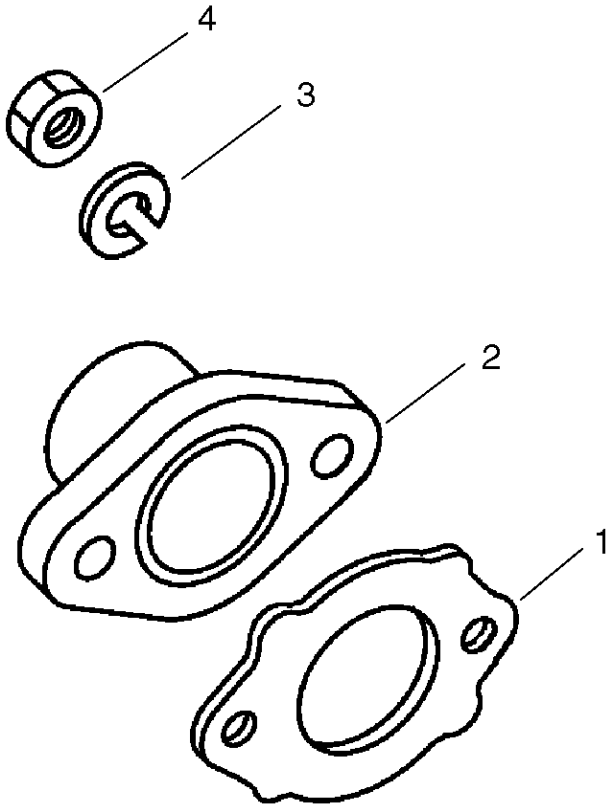


# Air Intake and Filtration Assembly
# Kohler CS12 PA-941621

| Ref | Part No. | Qty. | Description |
|---|---|---|---|
| ❸1 | 63 041 08-S | 1 | Gasket-Cleaner, Air |
| ❸2 | 63 054 01-S | 1 | Elbow-Cleaner, Air |
| ❸3 | 63 468 31-S | 2 | Washer-Spring |
| ❸4 | 63 100 03-S | 2 | Nut-Exhaust |
| ❶❸ | 63 113 28-S | 1 | Label-Emissions |

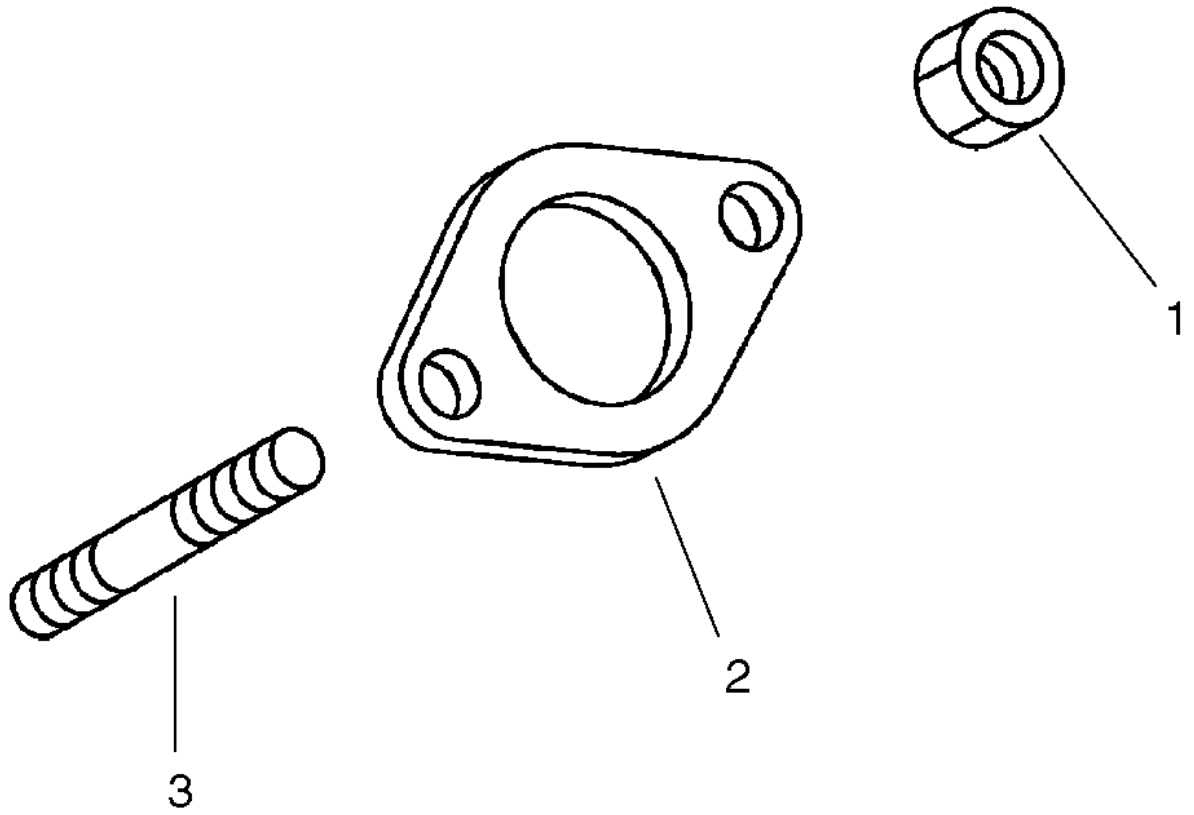


# Exhaust Assembly
# Kohler CS12 PA-941621

| Ref | Part No. | Qty. | Description |
|---|---|---|---|
| ❸1 | 63 100 03-S | 2 | Nut-Exhaust |
| ❸2 | 63 041 06-S | 1 | Gasket-Exhaust |
| ❸3 | 63 072 01-S | 2 | Stud-Exhaust |
| ❶❸ | 63 755 01-S | 1 | Set-Gasket |

# NOTES


TORO®