Form Number 3352-740 Rev B

Workman® 1100
Utility Vehicle

Model No. 07252TC - 250000001 and up.

Parts Catalog

Ordering Replacement Parts

To order replacement parts, please supply the part number, the quantity, and the description of each part desired.

Understanding Reference Numbers

Each Identified part in an illustration has a reference number. The reference number for a part also appears in the parts list, along with other information about the part.

This catalog uses two special reference number formats, one to indicate parts in a service assembly and another to indicate the quantity of a given part in an illustration.

Service Assembly Reference Numbers

Parts in service assemblies have reference numbers in the form a:b. The a represents the reference number of the entire service assembly and the b represents a sequential number unique to each part within the service assembly.

For example, a wheel assembly might be identified by reference number 6, the tire by 6:1, the valve by 6:2, and the wheel by 6:3. When you order the assembly identified by reference number 6, you receive all parts identified by reference numbers 6:1, 6:2, and 6:3. However, you may also order any part individually. Reference numbers of this type appear in illustrations and in part lists.

Reference Numbers Indicating Quantity

In an illustration, if a reference number indicates more than one part, the reference number has the form nX y. The n represents the quantity of the part, the X is the multiplication symbol, and the y represents the reference number.

For example, in an illustration, the reference number 2X 37 means that two of the parts identified by reference number 37 are indicated.

© The Toro Company - 2006
All Rights Reserved

Register your product at www.Toro.com

Contents

Description	Page
Hood and Fender Assembly	3
Pedal Assembly	4
Shifter Assembly	5
Frame Assembly	6
Seat Base Assembly	7
Front Tire and Steering Assembly	8
Tire, Wheel and Hub Assembly	9
Rear Tire and Transaxle Assembly	10
Driven Clutch Assembly No. 99-7104	11
Transaxle Assembly No. 107-0360	12
Right Hand Brake Assembly No. 99-7136	14
Left Hand Brake Assembly No. 99-7137	15
Drivetrain Mount Assembly	16
Air Cleaner Assembly No. 99-7120	17
Upper Steering Assembly	18
Steering Gearbox Assembly No. 99-7660	19
Box and Tailgate Installation Assembly	20
Box and Tailgate Assembly	21
Engine and Clutch Assembly	22
Drive Clutch Assembly No. 99-7103	24
Starter Generator Assembly No. 99-7108	25
Crankshaft Assembly Kohler CS12 PA-941621	26
Crankcase Assembly Kohler CS12 PA-941621	27
Oil Pan and Lubrication Assembly Kohler CS12 PA-941621	28
Head, Valve and Breather Assembly Kohler CS12 PA-941621	29
Ignition and Electrical Assembly Kohler CS12 PA-941621	30
Blower Housing and Baffle Assembly Kohler CS12 PA-941621	31
Fuel System Assembly Kohler CS12 PA-941621	32
Air Intake and Filtration Assembly Kohler CS12 PA-941621	33
Exhaust Assembly Kohler CS12 PA-941621	34

Part Description Abbreviations

Part descriptions in this catalog may include the following abbreviations.

AR	as required
ASM	assembly
BBC	blade brake clutch
CARR	carriage
DEG	degrees
EXT	external
FH	flat head
GA	gauge
HD	heavy-duty
HF	hex flange
HH	hex head
HHF	hex head flange
HHFTF	hex head flange thread forming
HJ	hex jam
HLH	hex lag head
HOC	height-of-cut
HSBH	hex socket button head
HSFH	hex socket flat head
HSH	hex socket head
HWH	hex washer head
HWHTF	hex washer head thread forming
HYD	hydraulic
LH	left hand
NI	nylon insert
NPTF	national pipe thread fine
PFH	phillips flat head
PPH	phillips pan head
PPHTF	phillips pan head thread forming
PRH	phillips round head
PTH	phillips truss head
PTO	power-take-off
RH	right hand
ROPS	roll-over protection system
SFH	slotted fillister head
SHH	slotted hex head
SHWH	slotted hex washer head
SPH	slotted pan head
SQH	square head
SRH	slotted round head
STD	standard
TAP	self tapping
TTH	torx truss head

Footnotes

❶ Not illustrated

❷ Not serviced separately

❸ Obtain Parts From Kohler

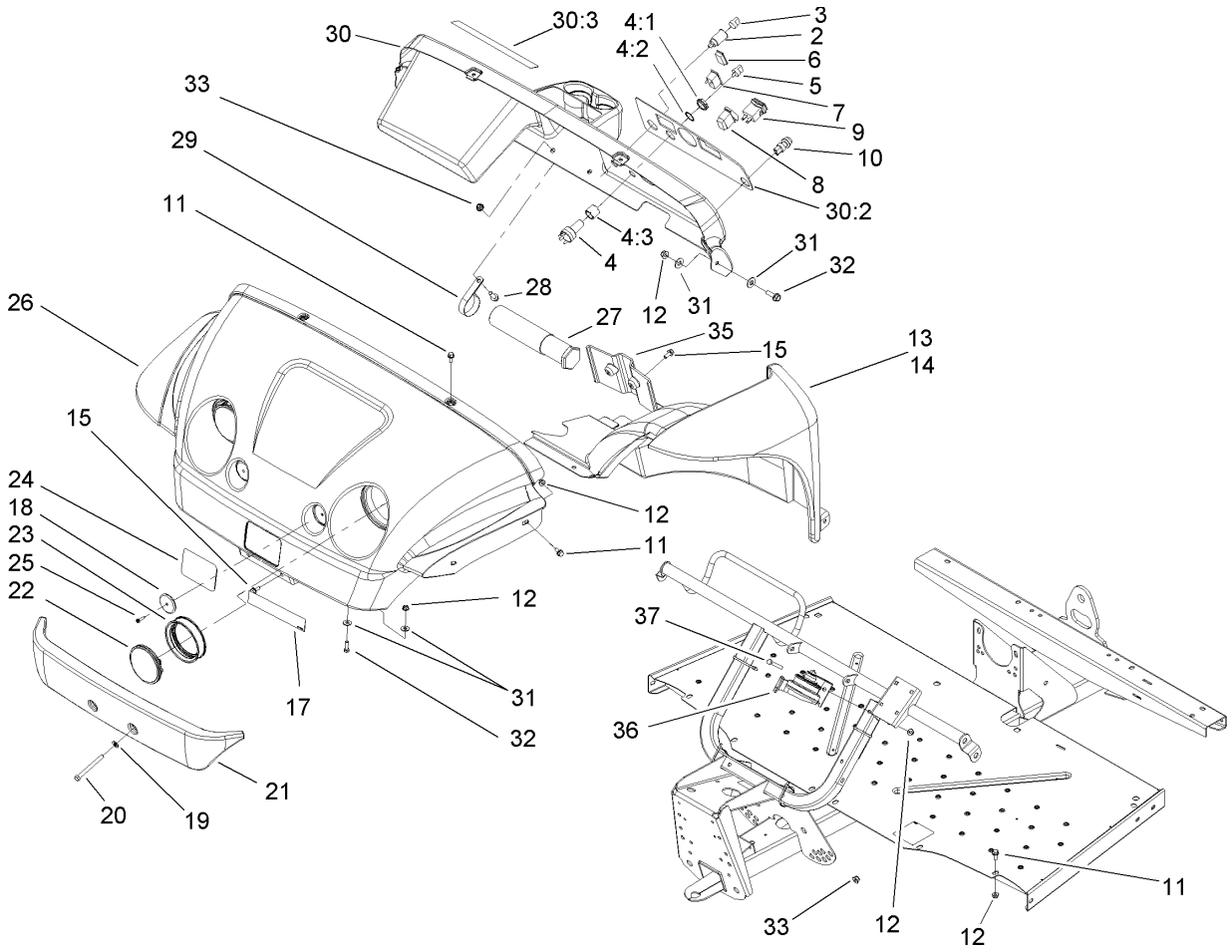

Hood and Fender Assembly

Ref	Part No.	Qty.	Description
2	99-7411	1	Point-Power
3	99-7416	1	Cap
4	104-6929	1	Switch-Ignition
4:1	104-7042	1	Nut-Switch, Plastic
4:2	104-7019	2	Washer-Lock, Internal
4:3	104-7021	1	Spacer-Switch
5	99-7418	2	Key-Ignition
6	99-7420	1	Plug-Hole
7	99-7410	1	Light-Oil
8	95-8999	1	Switch
9	94-4208	1	Hourmeter
10	18-2830	1	Button-Horn
11	3234-5	14	Screw-HHF
12	104-8300	15	Nut-Flange, NI
13	104-7076	1	LH Fender ASM
14	104-7077	1	RH Fender ASM
15	104-7206	4	Screw-HHF
17	104-7269	1	Decal
18	99-7312	2	Reflector
19	3256-24	2	Washer-Flat
20	323-42	2	Screw-HH
21	99-7733	1	Bumper-Plastic
22	99-7310	2	Headlight
23	99-7311	2	Mount-Headlight

Ref	Part No.	Qty.	Description
24	99-7339	1	Decal
25	32144-89	2	Screw-Forming, Thread
26	104-7003	1	Hood
27	74-0720	1	Tube-Manual
28	3234-11	2	Screw-HHF
29	2412-133	2	R-Clamp
30	107-0701	1	Dash ASM
30:2	107-0699	1	Decal-Panel, Control
30:3	99-7344	1	Decal-Danger
31	3256-3	8	Washer-Flat
32	3234-17	4	Screw-HHF
33	104-8301	4	Nut-Flange, NI
35	104-7075	1	Cover-Channel
36	116749	1	Horn
37	322-11	1	Screw-HH

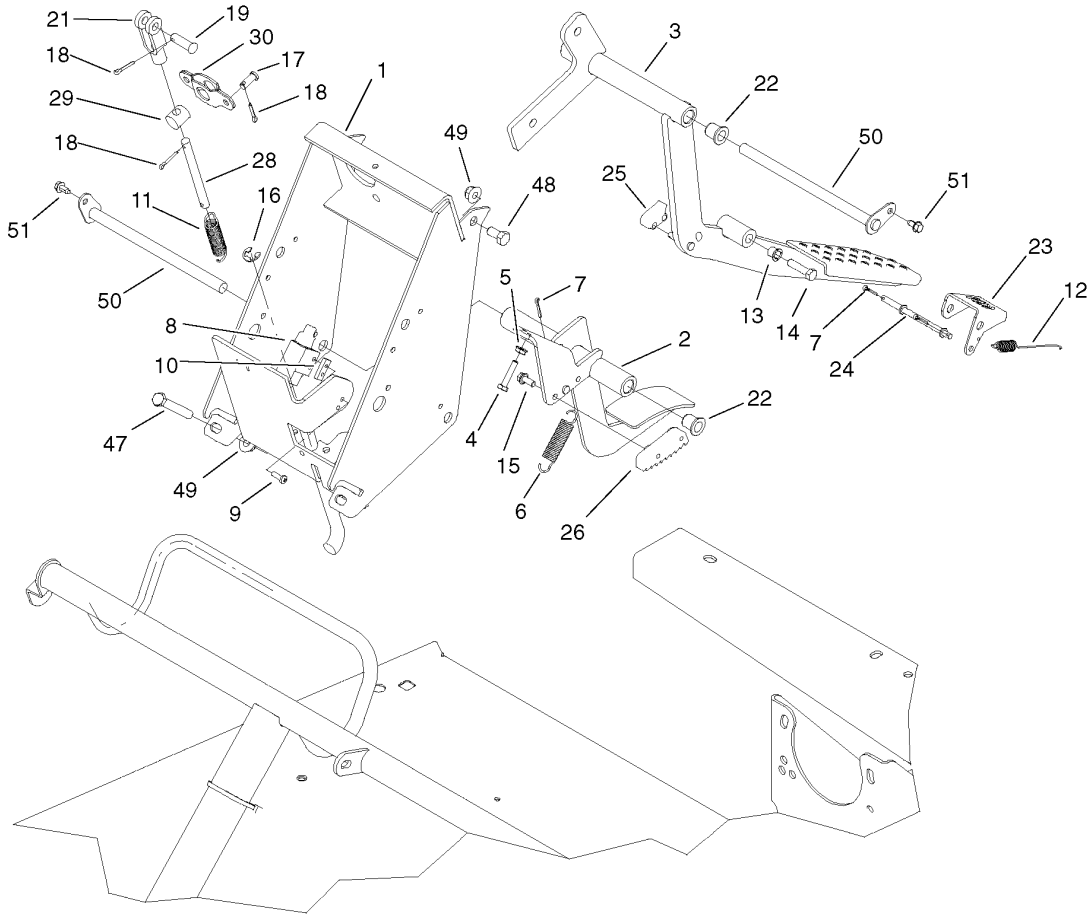

Pedal Assembly

Ref	Part No.	Qty.	Description
1	104-7160-03	1	Frame-Pedals
2	104-7165-03	1	Pedal-Throttle
3	104-7170-03	1	Pedal-Brake
4	321-7	2	Screw-HH
5	32149-2	2	Nut-Keps
6	104-6415	1	Spring-Return, Pedal
7	3272-4	4	Pin-Cotter
8	99-7407	1	Switch
9	104-7221	2	Screw-PPH
10	1-633181	1	Plate-Tapped
11	613386	1	Spring-Brake
12	92-6945	1	Spring-Extension
13	52-2891	2	Bushing-Link, Steering
14	323-12	1	Screw-HH
15	3234-33	2	Screw-HHF
16	32120-47	2	Ring-Retaining, External
17	283-62	2	Pin-Clevis
18	3272-10	4	Pin-Cotter
19	283-2	1	Pin-Clevis
21	1-633131	1	Yoke-Linkage, Brake
22	256-155	4	Bushing-Flange
23	104-6613	1	Pedal-Park
24	104-6616	1	Rod-Park
25	104-6624	1	Detent-Brake

Ref	Part No.	Qty.	Description
26	104-6614	1	Pawl-Brake
27	104-6571	2	Cable-Brake
28	104-6597	1	Rod-Threaded
29	104-6598	1	Pin-Pivot
30	104-6599	1	Pivot-Brake
47	323-11	2	Screw-HH
48	323-4	2	Screw-HH
49	104-8301	5	Nut-Flange, NI
50	104-7164	2	Pivot-Pedal
51	12-3270	2	Screw

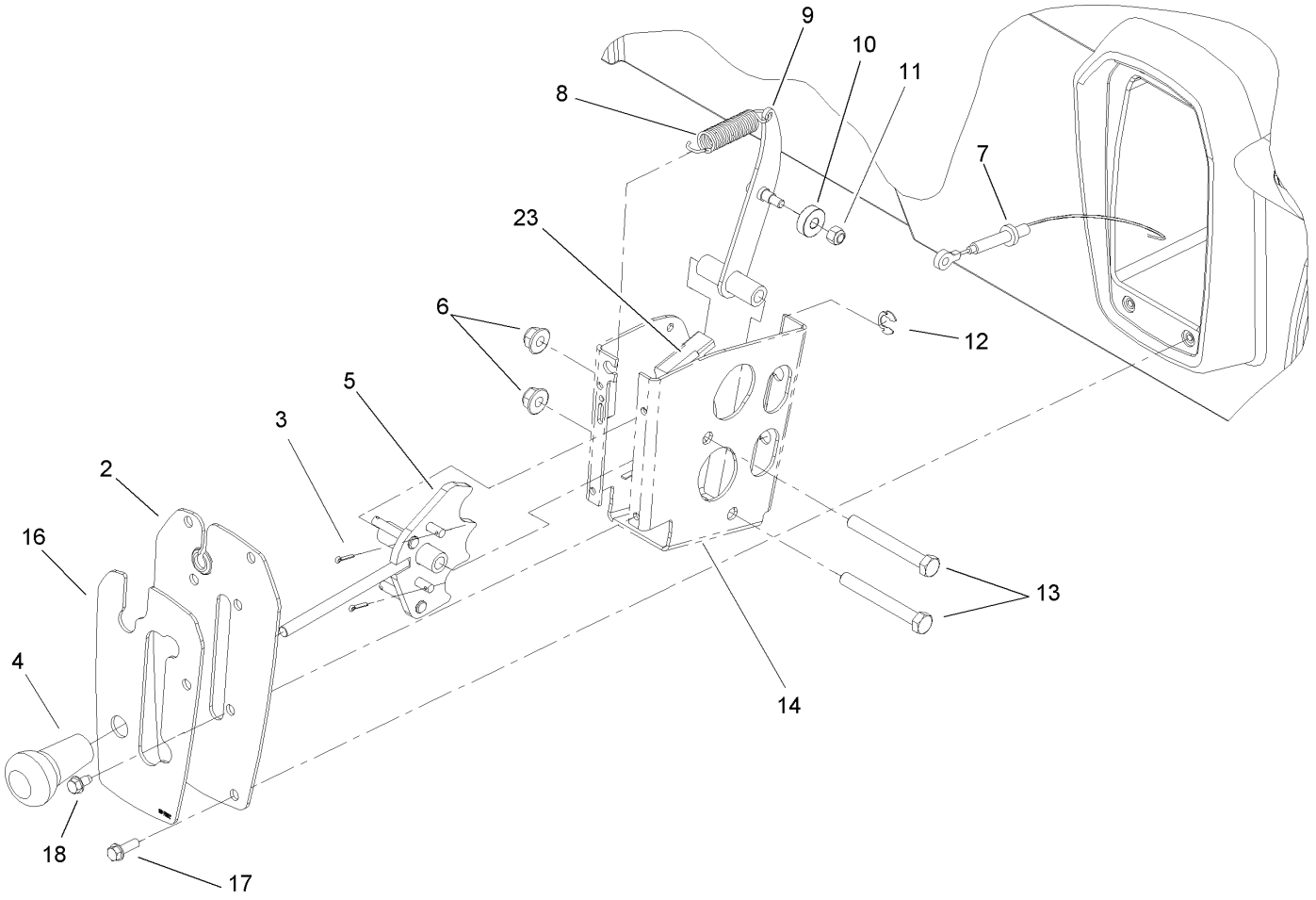

Shifter Assembly

Ref	Part No.	Qty.	Description
2	99-7887-03	1	Plate-Shifter
3	3272-5	2	Pin-Cotter
4	99-7981	1	Knob-Grip, Soft
5	108-3139	1	Lever-Shift
6	104-8301	2	Nut-Flange, NI
7	104-6896	2	Cable-Shift
8	104-6415	1	Spring-Return, Pedal
9	108-3138	1	Arm-Detent
10	251-307	1	Bearing-Ball
11	3296-42	1	Nut-Lock, NI
12	32151-101	2	E-Ring
13	323-14	2	Screw-HH
14	108-3141-03	1	Bracket-Shift
16	99-7952	1	Decal-Shifter
17	32105-15	4	Screw
18	12-3270	4	Screw
23	99-7408	1	Switch-Reverse

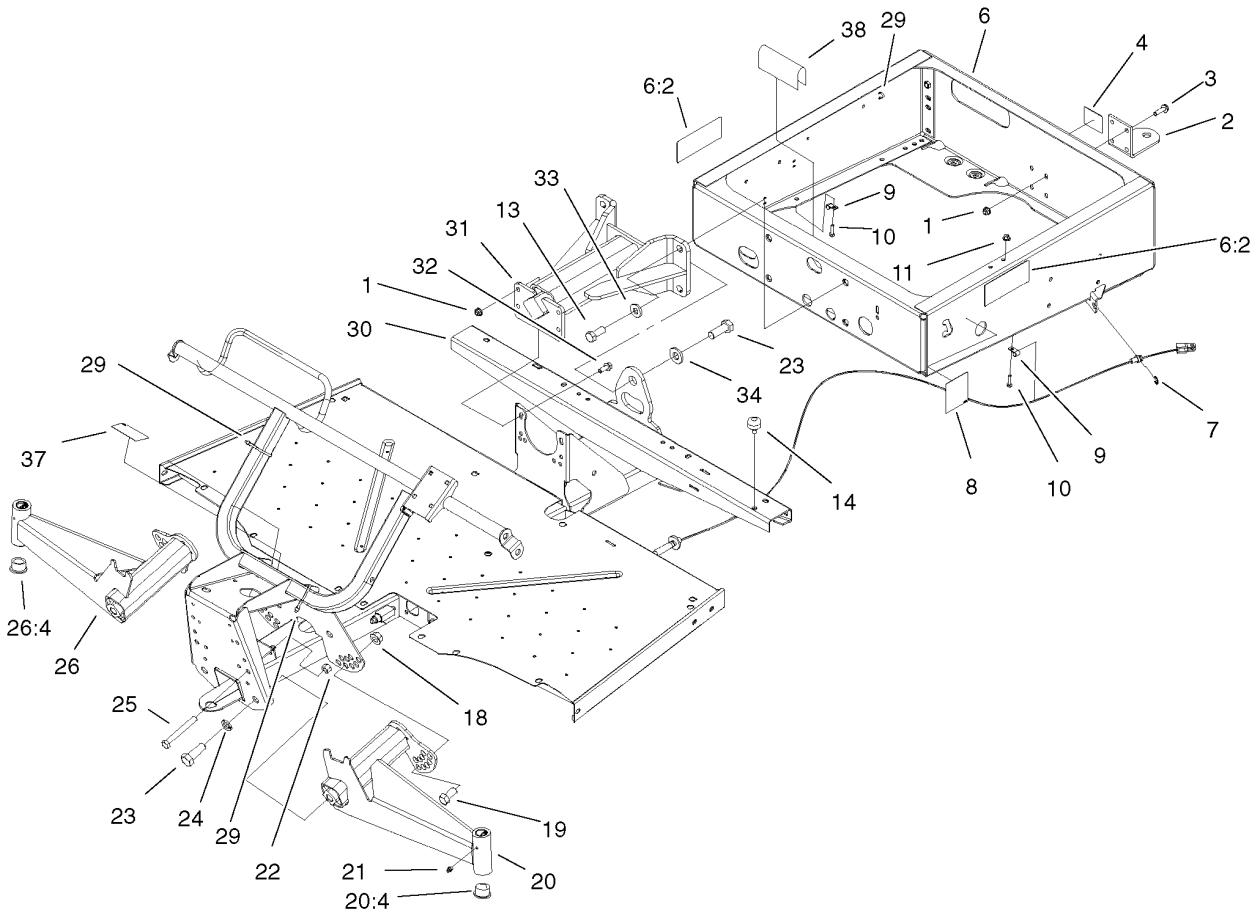

Frame Assembly

Ref	Part No.	Qty.	Description
1	104-8301	8	Nut-Flange, NI
2	99-7654-03	1	Hitch-Duty, Light
3	3234-24	4	Screw-HHF
4	99-7350	1	Decal-Information
6	99-7362	1	Rear Frame ASM
6:2	99-7345	2	Decal-Warning
7	32120-47	2	Ring-Retaining, External
8	99-7349	1	Decal-Information, Boxlatch
9	2412-89	4	Clamp
10	321-6	4	Screw-HH
11	32128-33	4	Nut-HF
13	327-4	4	Screw-HH
14	87-2440	1	Bumper-Rubber
18	32128-54	2	Nut-HF
19	3214-2	2	Screw-HH
20	3290-313	2	Screw-Ph
20	99-7685	1	LH A-Arm ASM
20:4	3-0348	2	Bushing
21	302-5	2	Fitting-Grease
22	3296-23	2	Nut-Lock, NI
23	328-24	5	Screw-HH
24	3254-7	4	Washer-Lock, Int
25	325-17	2	Screw-HH
26	99-7684	1	RH A-Arm ASM

Ref	Part No.	Qty.	Description
26:4	3-0348	2	Bushing
29	3290-379	12	Tie-Cable
30	104-7197-03	1	Front Frame ASM
31	99-7700	1	Pivot Yoke ASM
32	3234-11	4	Screw-HHF
33	99-7667	4	Washer-Flat
34	87-3060	1	Washer-Hardened
37	104-6855	1	Decal-Capacity
38	95-5686	1	Trim

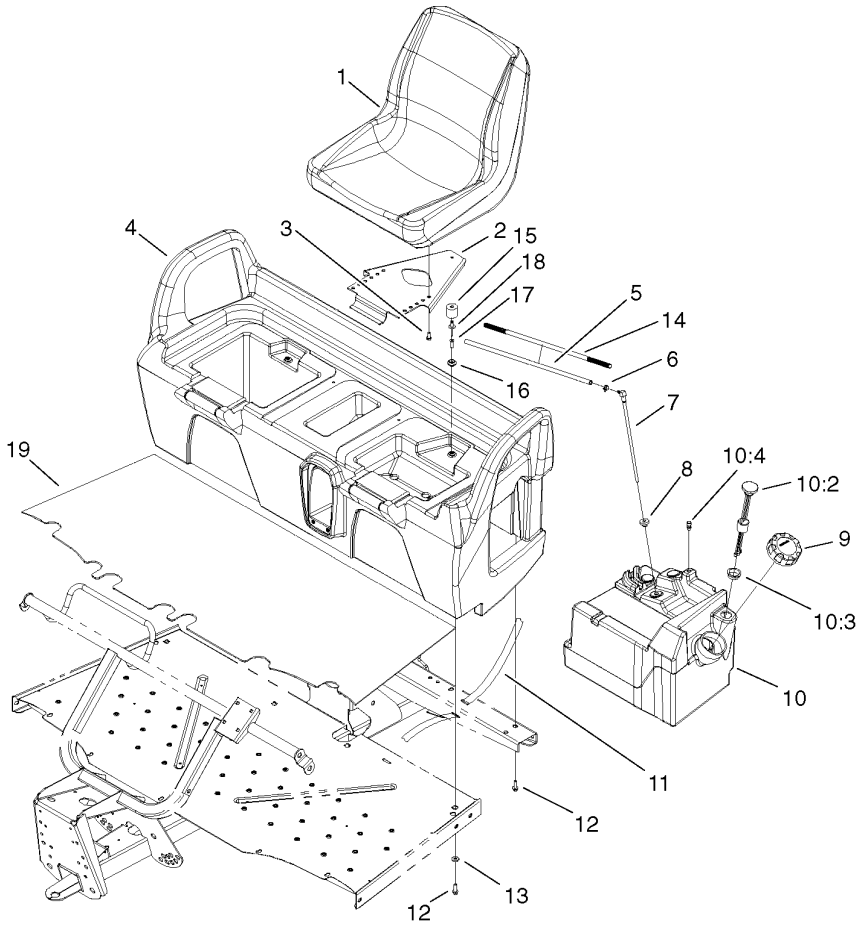

Seat Base Assembly

Ref	Part No.	Qty.	Description
1	106-6672	2	Seat
2	99-7829	2	Bracket-Seat
3	33114-016	8	Screw-HH
4	104-6401	1	Seat Base ASM
5	99-7187	1	Hose-Fuel
6	2412-98	1	Clamp
7	99-7264	1	Pipe-Stand
8	46-6560	1	Bushing
9	95-4192	1	Unleaded Gas Cap ASM
10	99-7323	1	Fuel Tank ASM
10:2	99-7262	1	Gauge-Fuel
10:3	95-8972	1	Grommet
10:4	99-7267	1	Vent-Air
11	3339-175	1	Strapping-Web, 48 Inch
12	3234-17	8	Screw-HHF
13	88-7200	8	Washer-Flat
14	99-7129	1	Conduit-Line, Fuel
15	99-7830	2	Rubber Receptical ASM
16	99-7833	2	Post-Holding
17	32108-5	2	Screw-FH
18	3290-412	2	Rivet
19	104-6590	1	Mat-Floor

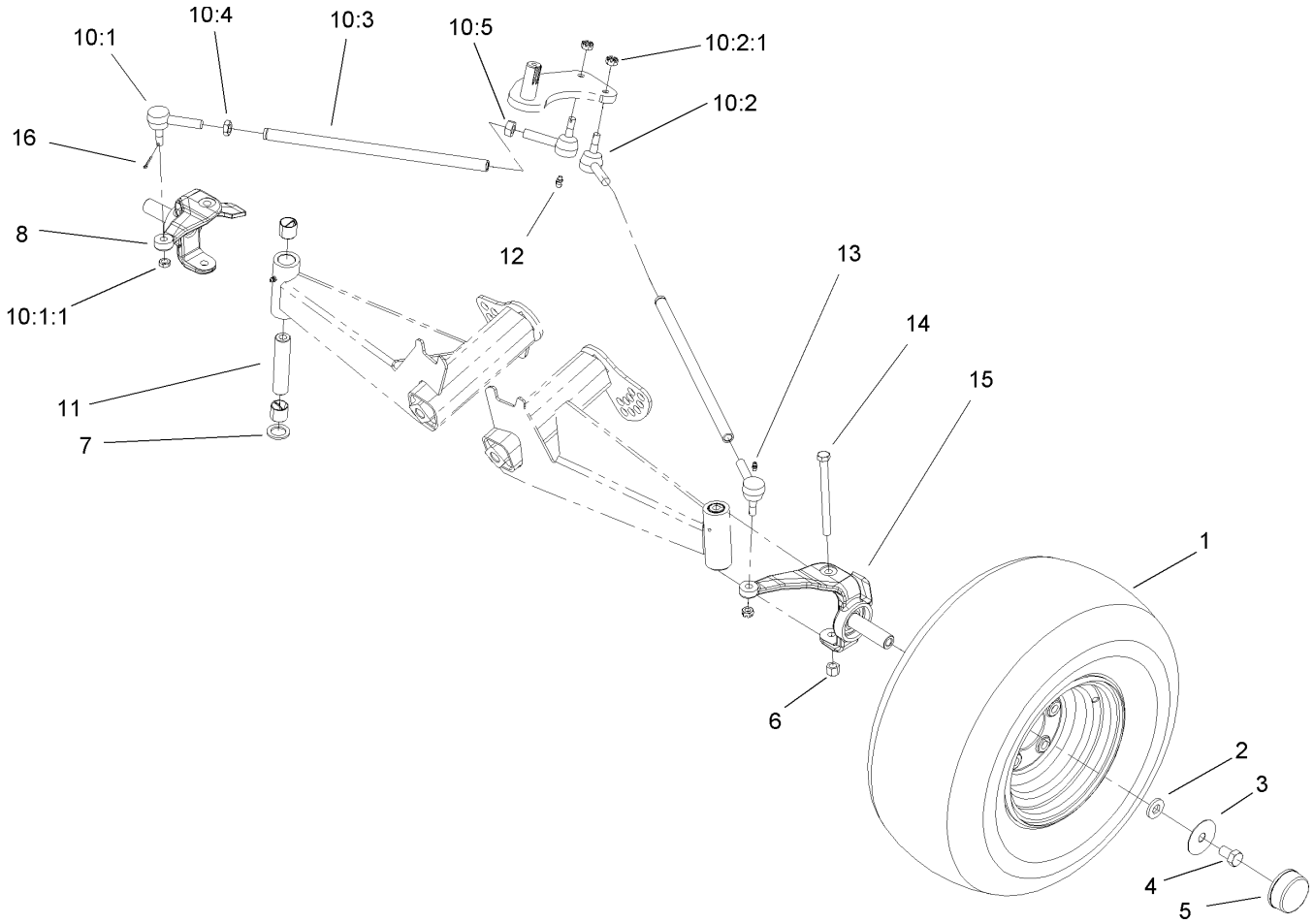

Front Tire and Steering Assembly

Ref	Part No.	Qty.	Description
❷1		2	Tire, Wheel And Hub ASM
2	99-7667	2	Washer-Flat
3	99-7719	2	Washer
4	327-2	2	Screw-HH
5	94-7871	2	Cap-Dust
6	3296-23	2	Nut-Lock, NI
7	256-115	2	Washer-Thrust
8	99-7487-03	1	Spindle-RH
❷10		2	Rod-Tie
10:1	112772	1	Joint-Ball, RH
10:1:1	915031	1	Nut
10:2	112771	1	Joint-Ball, LH
10:2:1	915031	1	Nut
10:3	99-7600-03	1	Rod-Tie
10:4	3220-11	1	Nut-Jam
10:5	3218-21	1	Nut-Jam
11	99-7499	2	Sleeve-Kingpin
12	302-60	2	Fitting-Grease, 90 DEG
13	302-5	2	Fitting-Grease
14	325-20	2	Screw-HH
15	99-7486-03	1	Spindle-LH
16	3272-7	4	Pin-Cotter

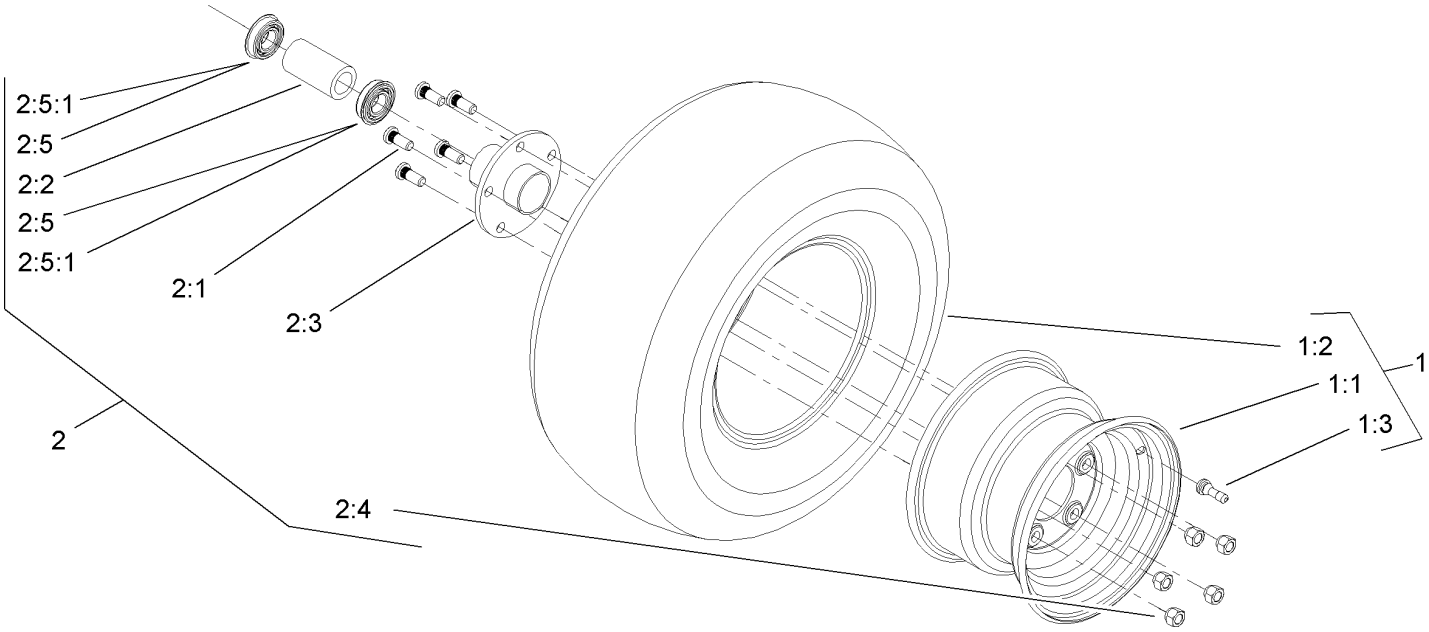

Tire, Wheel and Hub Assembly

Ref	Part No.	Qty.	Description
1	104-7290	1	Tire \ Wheel ASM
1:1	104-7288	1	Wheel
1:2	104-7289	1	Tire
1:3	232-27	1	Stem-Valve
2	104-7287	1	Hub And Flange ASM
2:1	104-7283	5	Stud
2:2	104-7284	1	Spacer
2:3	104-7286	1	Hub And Flange
2:4	242-50	5	Nut-Lug
2:5	94-7538	2	Bearing
2:5:1	94-2053	1	Ring-Snap

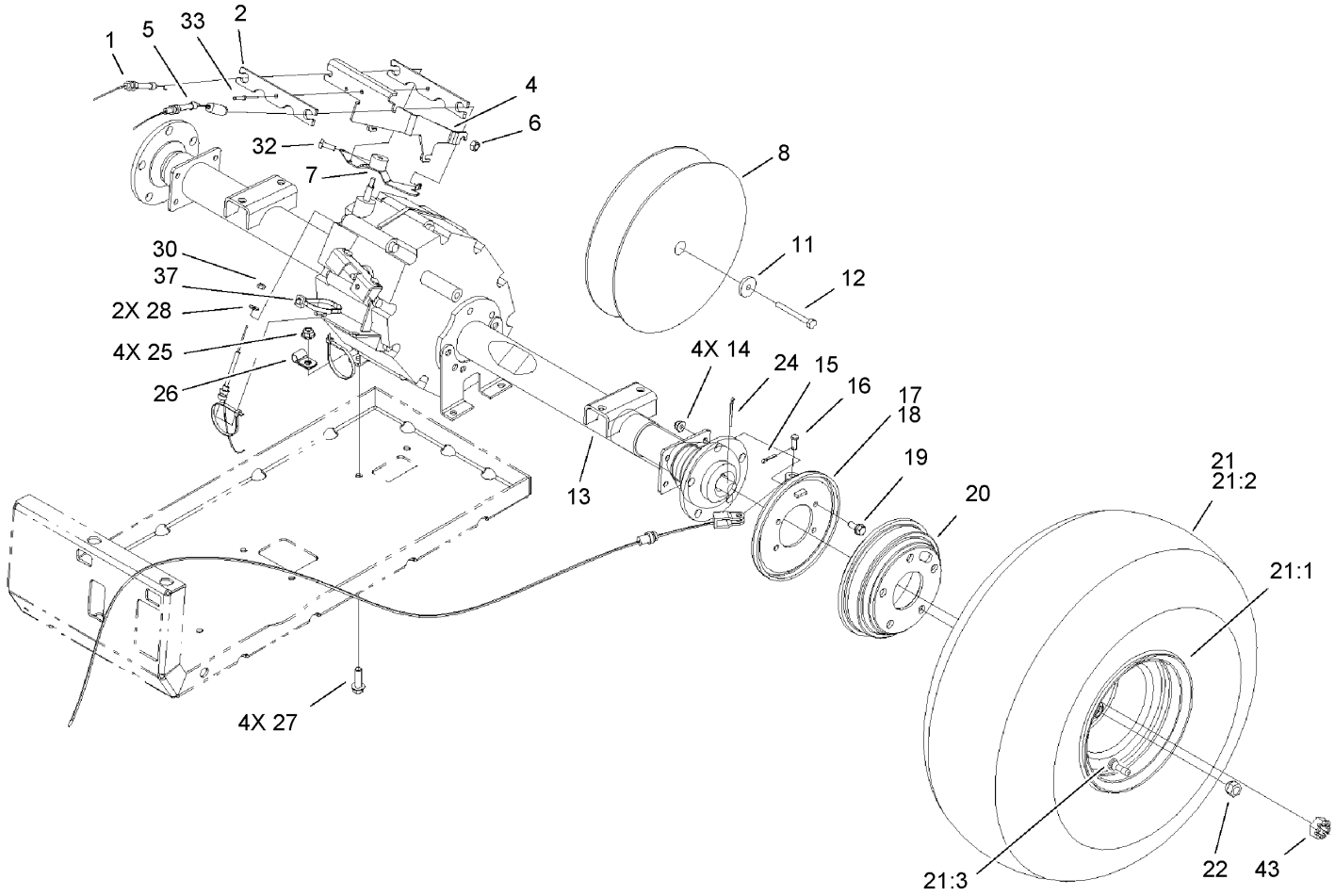

Rear Tire and Transaxle Assembly

Ref	Part No.	Qty.	Description
1	104-6474	1	Cable-Governor, 12Hp
2	99-7121	2	Bracket-Tamper
4	99-7054	1	Bracket-Cables
5	104-6572	1	Cable-Throttle
6	33024-00	3	Nut-Lock
7	104-6569	1	Bracket-Governor
8	99-7104	1	Clutch-Driven
11	104-6563	1	Washer-Stepped
12	104-6564	1	Screw-HH
13	104-6898	1	Transaxle
14	104-8300	8	Nut-Flange, NI
15	3272-10	2	Pin-Cotter
16	283-62	2	Pin-Clevis
17	99-7136	1	Brake-RH
18	99-7137	1	Brake-LH
19	3234-5	8	Screw-HHF
20	104-6500	2	Drum-Brake
❶21		2	Tire And Wheel ASM
21:1	104-7288	1	Wheel
21:2	104-7289	1	Tire
21:3	232-27	1	Stem-Valve
22	242-50	10	Nut-Lug
24	3272-42	2	Pin-Cotter
25	104-8301	4	Nut-Flange, NI

Ref	Part No.	Qty.	Description
26	2412-10	1	R-Clamp
27	3234-24	4	Screw-HHF
28	3256-49	2	Washer-Flat (Only On: 38053)
30	3296-2	2	Nut-Lock
32	3241-6	2	Screw-SQH
33	99-7122	1	Rivet-Annodized
37	3290-378	1	Tie-Cable
43	104-1656	2	Nut-Castle

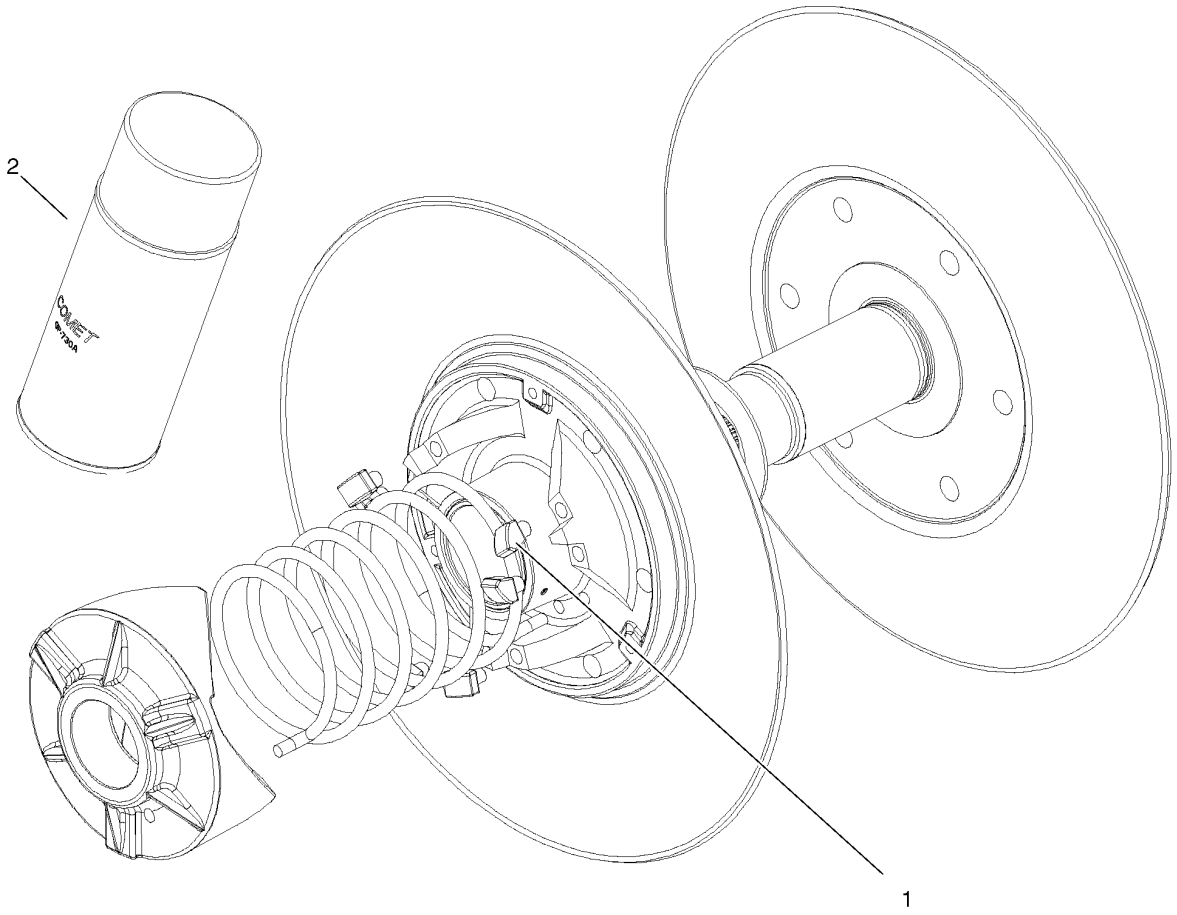

Driven Clutch Assembly No. 99-7104

Ref	Part No.	Qty.	Description
1	104-4257	1	Button Kit
2	104-7011	1	Lubricant-Dry

Transaxle Assembly No. 107-0360

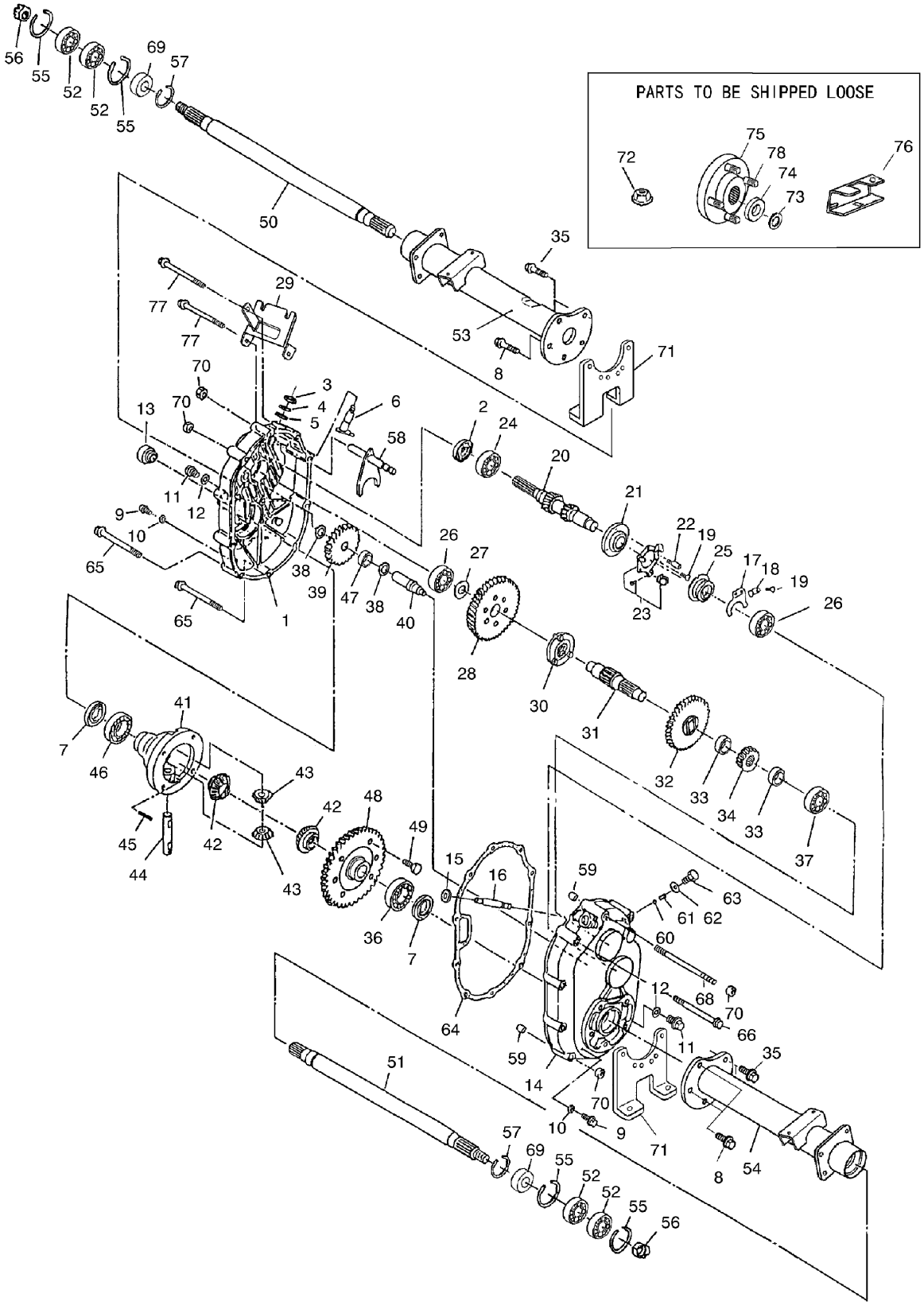

Transaxle Assembly No. 107-0360

Ref	Part No.	Qty.	Description
1	104-1601	1	Case-LH, Complete
2	104-1602	1	Seal-Oil
3	104-1603	1	Seal-Oil
4	104-1604	1	Ring-Snap
5	104-1605	1	Spacer
6	104-1606	1	Shaft-Selector
7	104-1607	2	Seal-Oil
8	104-1608	4	Bolt-Flange
9	104-1609	2	Plug-Check, Oil
10	104-1610	2	Gasket
11	104-1611	2	Plug-Drain, Oil
12	104-1612	2	Gasket
13	104-1613	1	Plug-Filler, Oil
14	104-1614	1	Case-Complete, RH
15	104-1615	1	Seal-Oil
16	104-1616	1	Shaft-Governor
17	104-1617	1	Fork-Governor
18	104-1618	1	Stopper
19	104-1619	4	Screw And Washer ASM
20	104-7002	1	Shaft-Input, Complete
21	104-1621	1	Base-Governor
22	104-1622	1	Pin-Lock
23	104-1623	1	Unit-Plate, Governor
24	104-1624	1	Bearing-Ball
25	104-1625	1	Sleeve-Governor
26	104-1626	2	Bearing-Ball
27	104-1627	1	Spacer
28	104-1628	1	Gear
29	104-1629	1	Bracket-Wire, Change
30	104-1630	1	Clutch-Pin
31	104-1631	1	Shaft-Center
32	104-1632	1	Gear-47
33	104-1633	2	Collar
34	104-1634	1	Gear
35	104-1635	6	Bolt-Flange
36	104-1636	1	Bearing-Ball
37	104-1637	1	Bearing-Ball
38	104-1638	2	Spacer
39	104-1639	1	Gear-34
40	104-1640	1	Shaft-Counter
41	104-1641	1	Case-Differential
42	104-1642	2	Gear-Side, Differential
43	104-1643	2	Pinion-Differential
44	104-1644	1	Shaft-Differential
45	104-1645	1	Pin
46	104-1646	1	Bearing-Ball
47	104-1647	1	Bearing-Needle
48	104-1648	1	Gear-62
49	104-1649	6	Bolt
50	104-1650	1	Shaft-Axle, LH
51	104-1651	1	Shaft-Axle, RH
52	104-1652	4	Bearing-Ball

Ref	Part No.	Qty.	Description
53	104-1653	1	Case-Axle, LH
54	104-1654	1	Case-Axle, RH
55	104-1655	4	Ring-Snap
56	104-1656	2	Nut-Castle
60	104-1660	1	Ball-Steel
57	104-1657	2	Ring-Snap
58	104-6870	1	Shaft-Shift, Complete
59	104-1659	2	Knock-Pipe
60	104-1660	1	Ball-Steel
61	104-1661	1	Spring
62	104-1662	1	Gasket
63	104-1663	1	Bolt
64	104-1664	1	Gasket
65	104-1665	6	Bolt-Flange
66	104-1666	1	Bolt-Flange
68	104-6866	1	Bolt
69	104-6867	2	Collar
70	33004-00	11	Nut-HF
71	104-1671	2	Bracket-Axle
72	104-1672	1	Nut-Lock
73	104-1673	2	Washer-Spring
74	104-1674	2	Washer
75	104-1675	2	Hub
76	104-6860	1	Lever-Select
77	104-6869	2	Bolt-Flange
78	104-8649	10	Stud

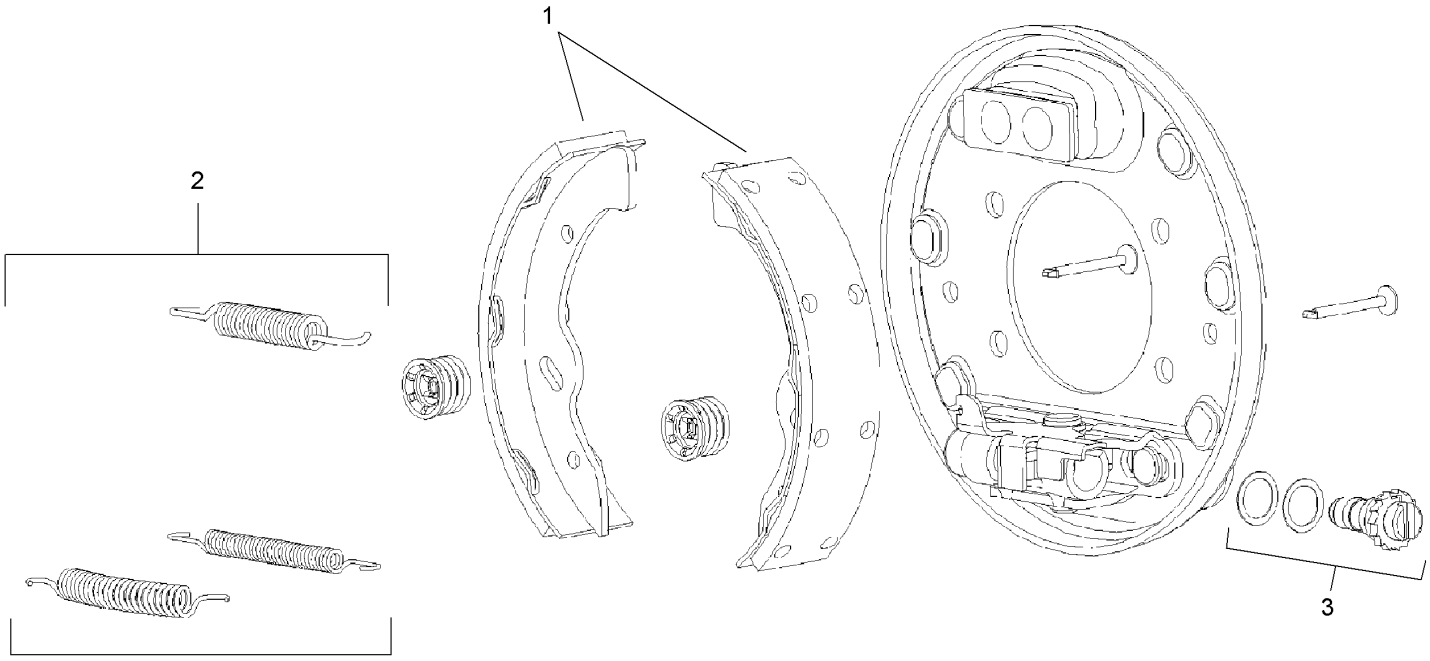

Right Hand Brake Assembly No. 99-7136

Ref	Part No.	Qty.	Description
1	104-1243	1	Shoe And Lining Kit
2	104-1244	1	Spring Kit
3	104-1246	1	RH Adjuster Kit

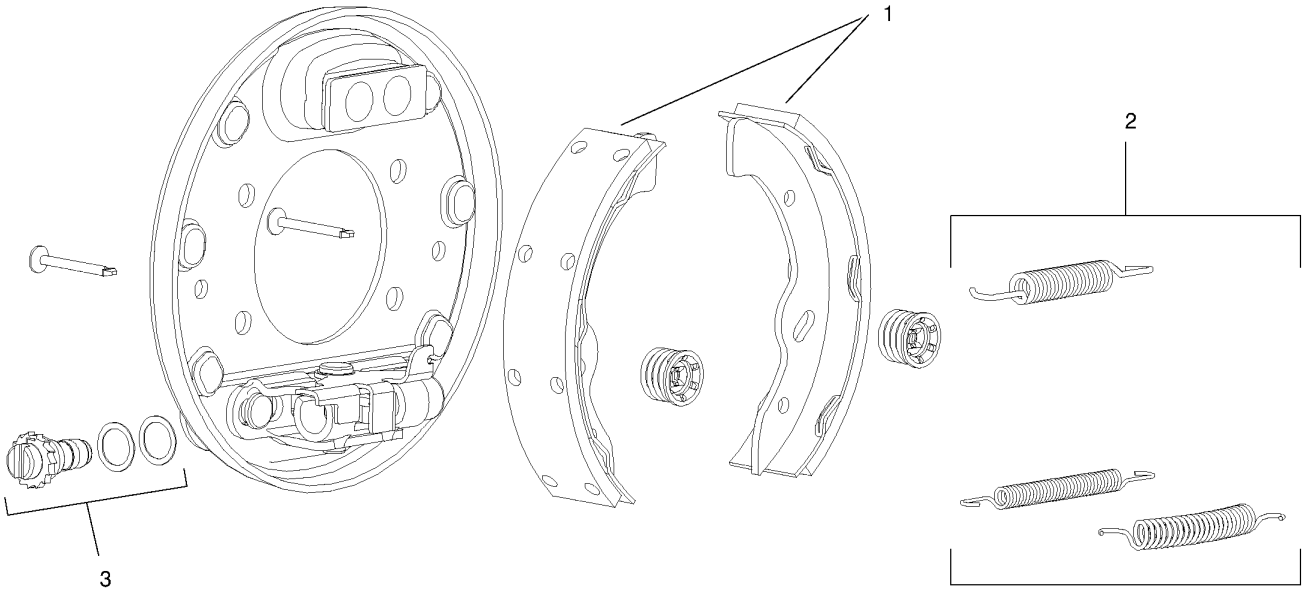

Left Hand Brake Assembly No. 99-7137

Ref	Part No.	Qty.	Description
1	104-1243	1	Shoe And Lining Kit
2	104-1244	1	Spring Kit
3	104-1245	1	LH Adjuster Kit

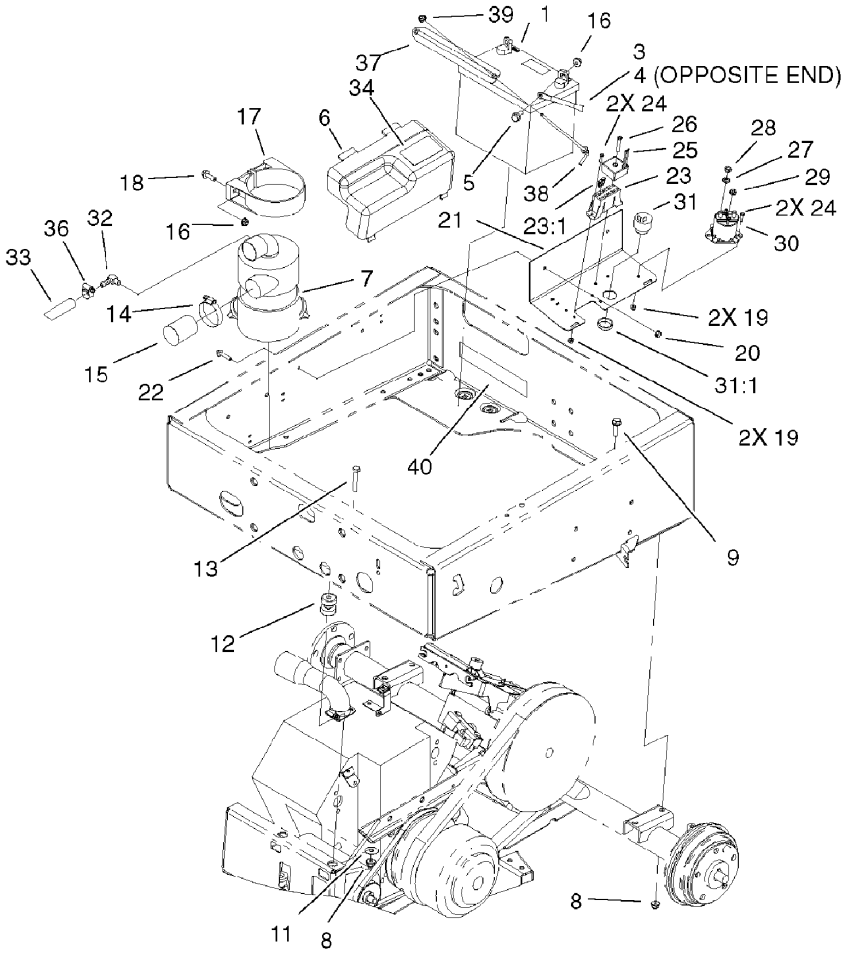

Drivetrain Mount Assembly

Ref	Part No.	Qty.	Description
1	104-8162	1	Battery
3	99-7402	1	Cable-Negitive
4	99-7404	1	Cable-Positive
5	3234-5	2	Screw-HHF
6	99-7325	1	Cover-Electrical
7	99-7120	1	Filter-Air
8	104-8301	6	Nut-Flange, NI
9	3234-24	4	Screw-HHF
11	3256-35	2	Washer-Flat
12	95-2596	2	Mount-Iso
13	323-10	2	Screw-HH
14	2412-130	1	Clamp-Hose
15	104-6528	1	Hose-Intake
16	104-8300	4	Nut-Flange, NI
17	95-5806	1	Bracket-Mounting
18	3234-17	2	Screw-HHF
19	3296-2	5	Nut-Lock
20	32128-32	2	Nut-HHF
21	99-7051-03	1	Mount-Component
22	3234-21	2	Screw-Cap
23	107-0669	1	Harness-Wire, Main
23:1	218-578	3	Fuse-10 Amp
❶23:2	100-4918	1	Diode
24	32105-13	4	Screw-SHH

Ref	Part No.	Qty.	Description
25	104-6927	1	Regulator
26	32105-1	1	Screw-SHH
27	3255-8	2	Washer-Lock
28	3218-2	2	Nut-Jam
29	32149-8	2	Nut-Keps
30	99-7406	1	Solenoid
31	80-9330	1	Alarm-Audio
31:1	104-5107	1	Nut-Plastic, Knurled
32	99-7230	1	Fitting-90 DEG
33	94-5625	1	Hose-Overflow, Radiator
34	99-7352	1	Decal-Information
36	2412-36	2	Clamp-Hose
37	92-5018-03	1	Clamp-Battery
38	95-4042	2	Hook-Retain, Battery
39	104-7201	2	Nut-HF
40	104-7102	1	Pad-Battery

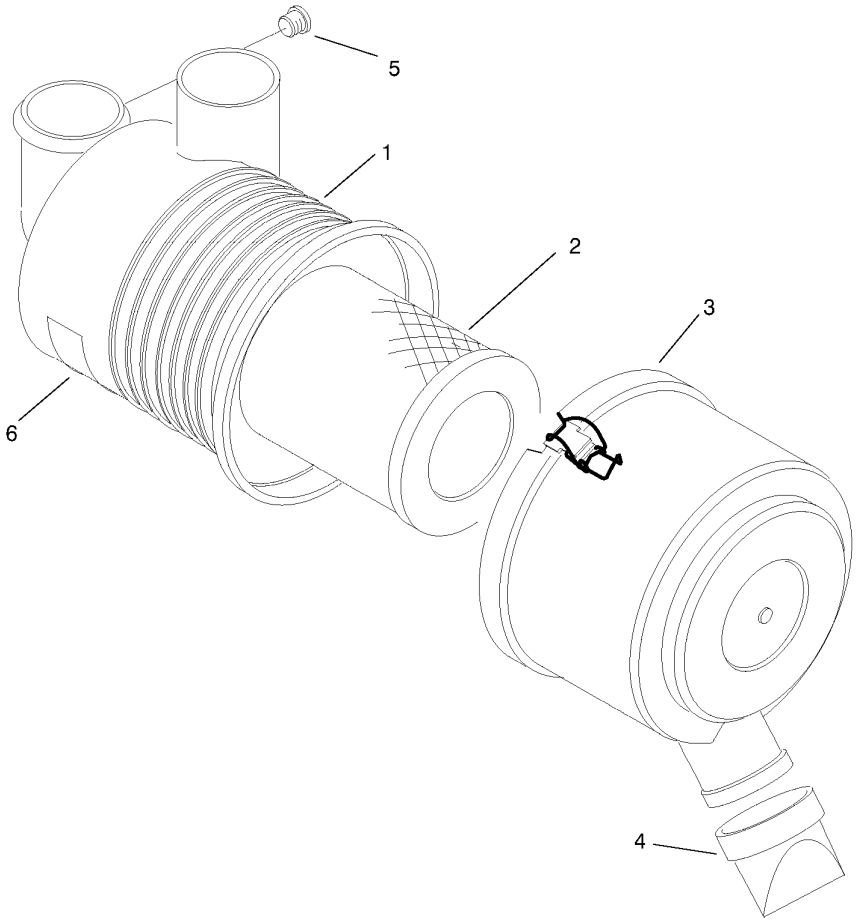

Air Cleaner Assembly No. 99-7120

Ref	Part No.	Qty.	Description
❷1		1	Body
2	108-3811	1	Filter-Air
3	94-3652	1	Cover ASM
4	87-9400	1	Valve-Vacuator
❷5		1	Plug
❷6		1	Marking

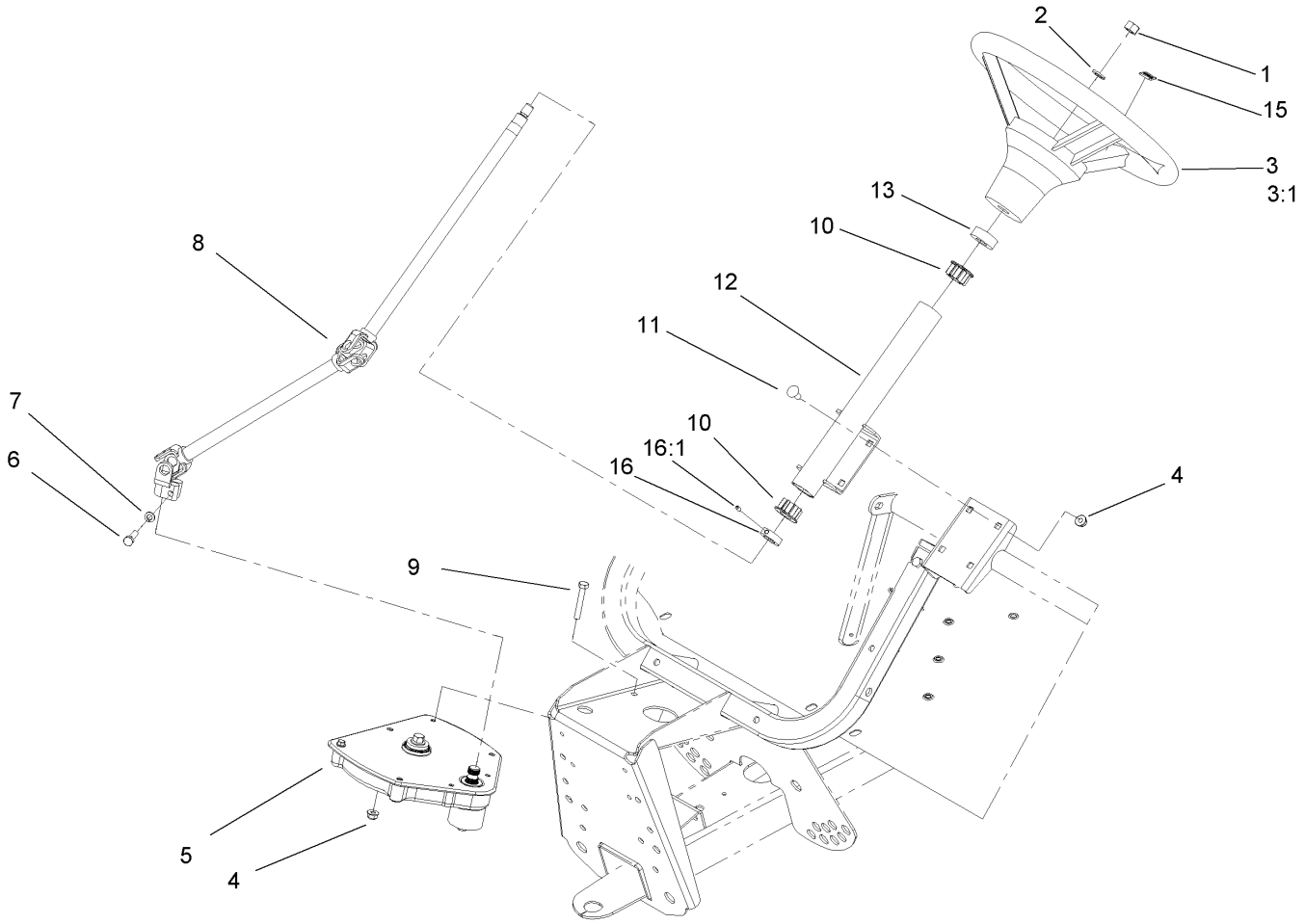

Upper Steering Assembly

Ref	Part No.	Qty.	Description
1	3277-1	1	Nut-Hex
2	48-8070	1	Washer-Lock
3	98-1471	1	Wheel-Steering
3:1	98-1468	1	Cover-Wheel, Steering
4	104-8300	7	Nut-Flange, NI
5	99-7660	1	Steering Gearbox ASM
6	48-7730	1	Screw-HH
7	3253-4	1	Washer-Lock
8	99-7653	1	Shaft-Steering
9	322-10	3	Screw-HH
10	93-1146	2	Bushing-Upper, Steering
11	3230-1	4	Bolt-CARR
12	99-7651-03	1	Column-Steering
13	21-9260	1	Cover-Dust
15	98-1459	1	Decal
16	111383	1	Collar
16:1	3245-32	1	Screw-HSH

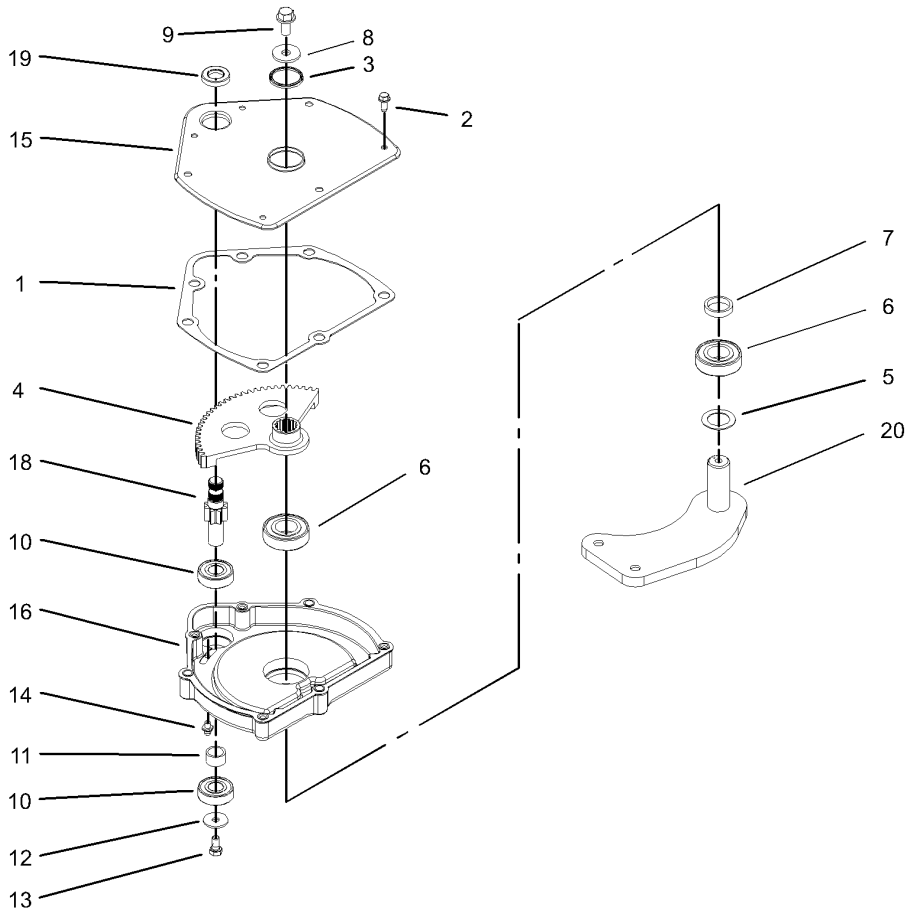

Steering Gearbox Assembly No. 99-7660

Ref	Part No.	Qty.	Description
1	94-2135	1	Gasket
2	32144-10	4	Screw-HWH
3	103118	1	Seal
4	99-7843	1	Sector-Gear
5	3256-42	1	Washer-Flat
6	251-82	2	Bearing-Ball
7	94-2218	1	Spacer-Shaft, Output
8	104-6563	1	Washer-Stepped
9	104-7156	1	Screw-HHF
10	38-7820	2	Bearing-Ball
11	94-2217	1	Spacer-Shaft, Input
12	1-613235	1	Washer
13	98-3498	1	Screw-HH
14	302-5	1	Fitting-Grease
15	99-7656-03	1	Cover-Housing, Steering
16	99-7658	1	Housing-Steering
18	99-7650	1	Gear-Pinion
19	99-7657	1	Seal-Oil
20	99-7601-03	1	Arm-Pitman

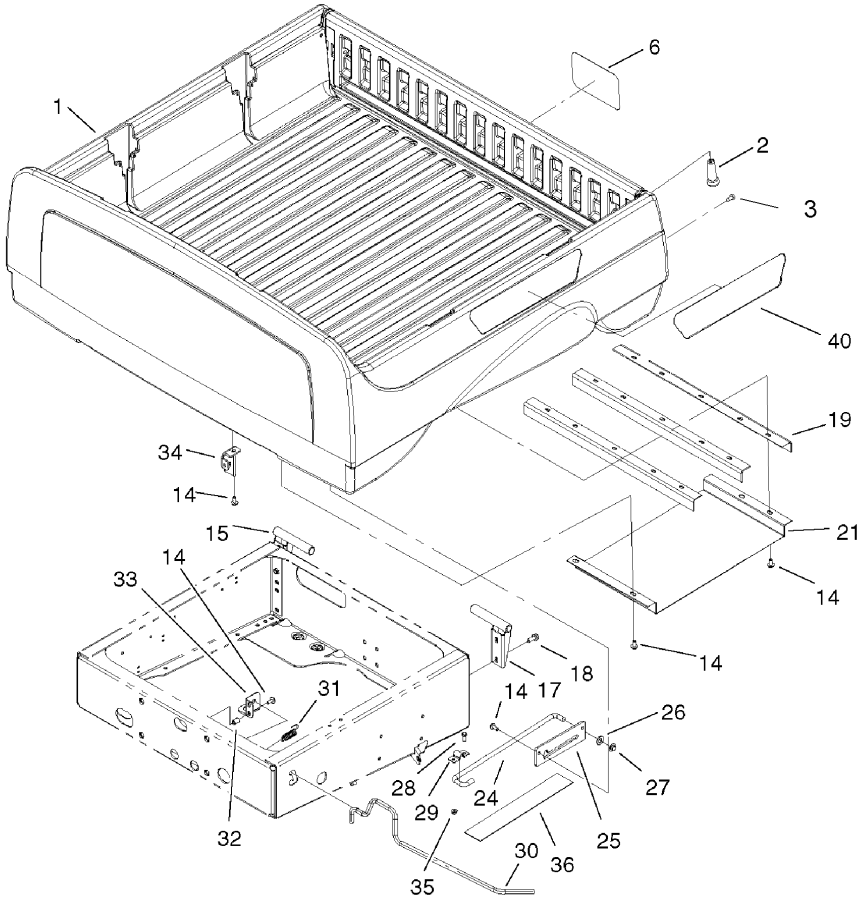

Box and Tailgate Installation Assembly

Ref	Part No.	Qty.	Description
❶1		1	Box And Tailgate ASM
2	99-7984	2	Knob-Soft Grip, Push-On
3	87-8460	2	Bumper-Rubber
6	104-7213	1	Decal
14	3234-5	18	Screw-HHF
15	99-7309-03	1	RH Pivot Bracket ASM
17	99-7308-03	1	LH Pivot Bracket ASM
18	3234-11	4	Screw-HHF
19	99-7864-03	3	Brace-Box
21	99-7870	1	Shield-Heat
24	99-7895	1	Rod-Prop
25	99-7894	1	Bracket-Rod, Prop
26	3256-26	1	Washer-Flat
27	32112-14	1	Nut-Push
28	3234-17	2	Screw-HHF
29	99-7896	1	Bracket-U, Prop Rod
30	99-7745	1	Rod-Latch
31	5-7290	1	Spring-Tension
32	32148-7	2	Nut-Insert
33	99-7744-03	1	Bracket-Latch
34	99-7742-03	1	Hook-Latch, RH
35	104-8300	2	Nut-Flange, NI
36	104-6859	1	Shield-Heat
40	104-7265	2	Decal

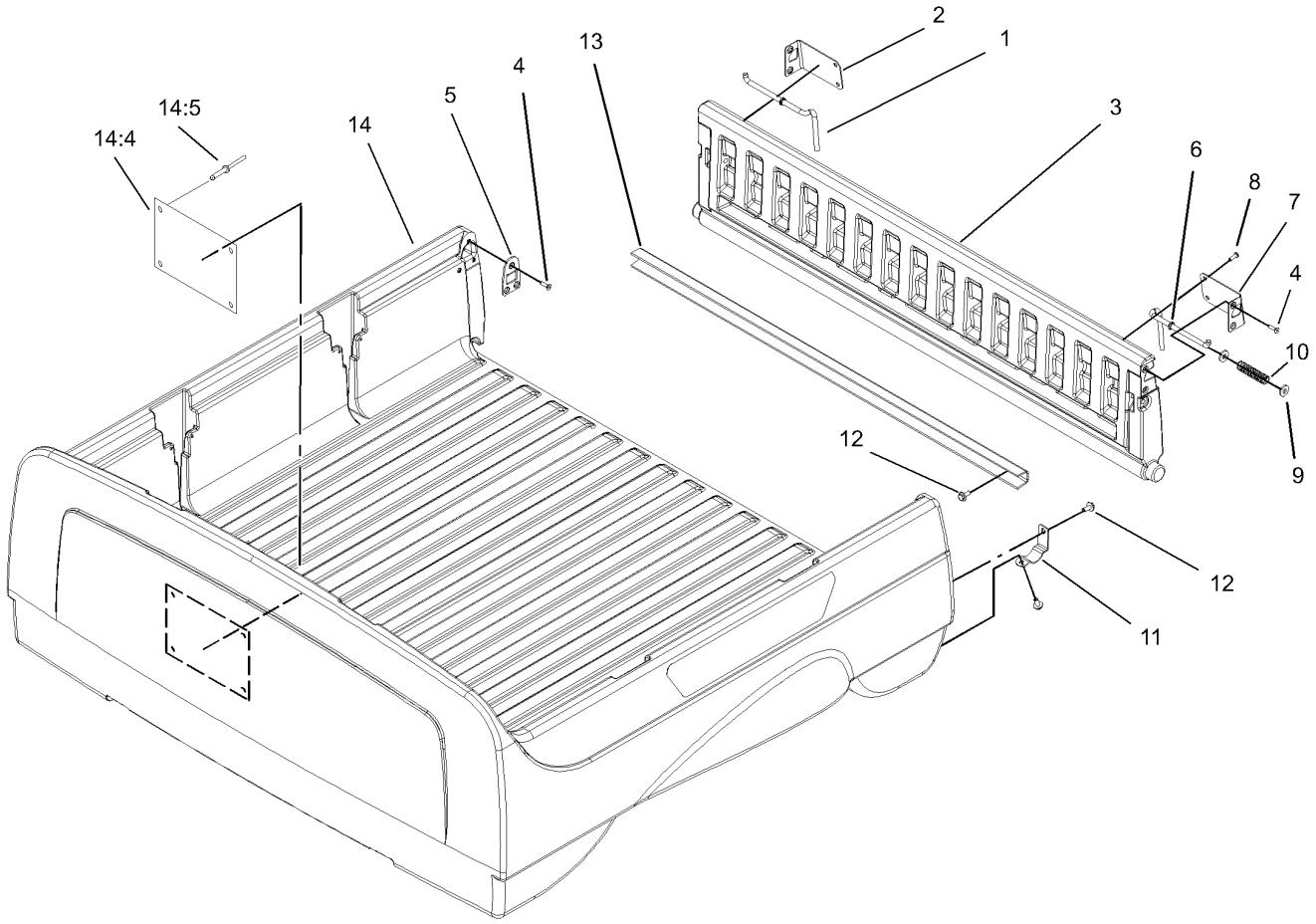

Box and Tailgate Assembly

Ref	Part No.	Qty.	Description
1	99-7860	1	Rod-Latch, Right
2	99-7858	1	Bracket-Tailgate Latch, Right
3	99-7893	1	Tailgate ASM
4	99-7334	10	Screw
5	99-7852	2	Plate-Striker
6	99-7859	1	Rod-Latch, Left
7	99-7857	1	Bracket-Tailgate Latch, Left
8	99-7335	4	Screw
9	99-7861	4	Washer-Latch
10	61-8880	2	Spring
11	99-7286	2	Bracket-Pivot, Tailgate
12	3234-5	10	Screw-HHF
13	99-7867	1	Channel-Tailgate
14	104-7203	1	Box ASM
14:4	99-7954	1	Decal-No Riders
14:5	3290-415	4	Rivet

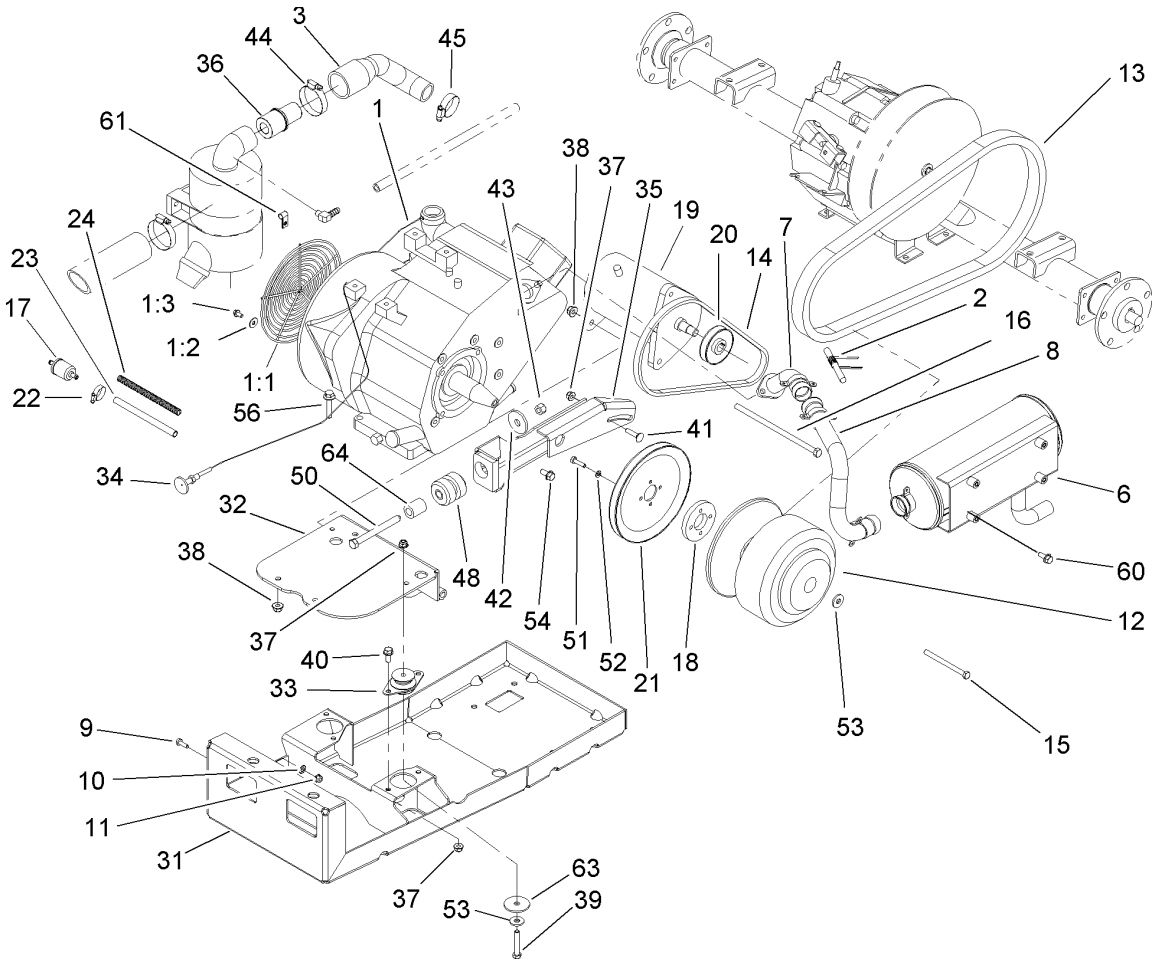

Engine and Clutch Assembly

Ref	Part No.	Qty.	Description
1	104-6565	1	Engine-Kohler, Cs12 Pa-941621
1:1	104-6538	1	Guard-Flywheel
1:2	104-6547	4	Washer-Flat
1:3	104-6548	4	Screw-Flange
2	104-6478	4	Spring-Coupler, Exhaust
3	104-6495	1	Hose-Intake
6	104-6510	1	Muffler
7	104-6511	1	Manifold
8	104-6512	1	Coupler-Exhaust
9	321-4	1	Screw-HH
10	3255-8	1	Washer-Lock
11	32128-32	1	Nut-HHF
12	99-7103	1	Clutch-Drive
13	99-7143	1	Belt-Drive
14	99-7132	1	V-Belt-Starter
15	99-7200	1	Screw-HH
16	323-30	1	Screw-HH
17	94-2690	1	Filter-Fuel
18	99-7064	1	Spacer-Starter
19	99-7108	1	Generator-Starter
20	99-7130	1	Pulley-Starter
21	99-7131	1	Pulley-Engine
22	2412-98	3	Clamp
23	47-2963	1	Hose-Fuel

Ref	Part No.	Qty.	Description
24	99-7377	1	Conduit-Line, Fuel
❶25	104-6928	1	Cable-Positive
❶26	107-0671	1	Harness-Wire
❶27	99-7403	1	Cable-Negitive
❶29	99-7405	1	Cable-Negative
31	104-6521-03	1	Mount-Engine
32	104-6525-03	1	Base-Engine
33	104-6562	2	Mount-Iso
34	104-6507	1	Cable-Choke, Kohler
35	104-6516-03	1	Bracket-Starter
36	104-6531	1	Restrictor-Intake
37	104-8300	7	Nut-Flange, NI
38	104-8301	5	Nut-Flange, NI
39	322-11	2	Screw-HH
40	3234-5	4	Screw-HHF
41	3230-3	1	Screw-CARR
42	84-1560	1	Washer-Thrust
43	3296-48	1	Nut-Lock, NI
44	2412-130	1	Clamp-Hose
45	2412-3	1	Clamp-Hose
48	87-4970	1	Engine Mount ASM
50	104-6561	1	Screw-HH
51	321-6	4	Screw-HH
52	3253-3	4	Washer-Lock

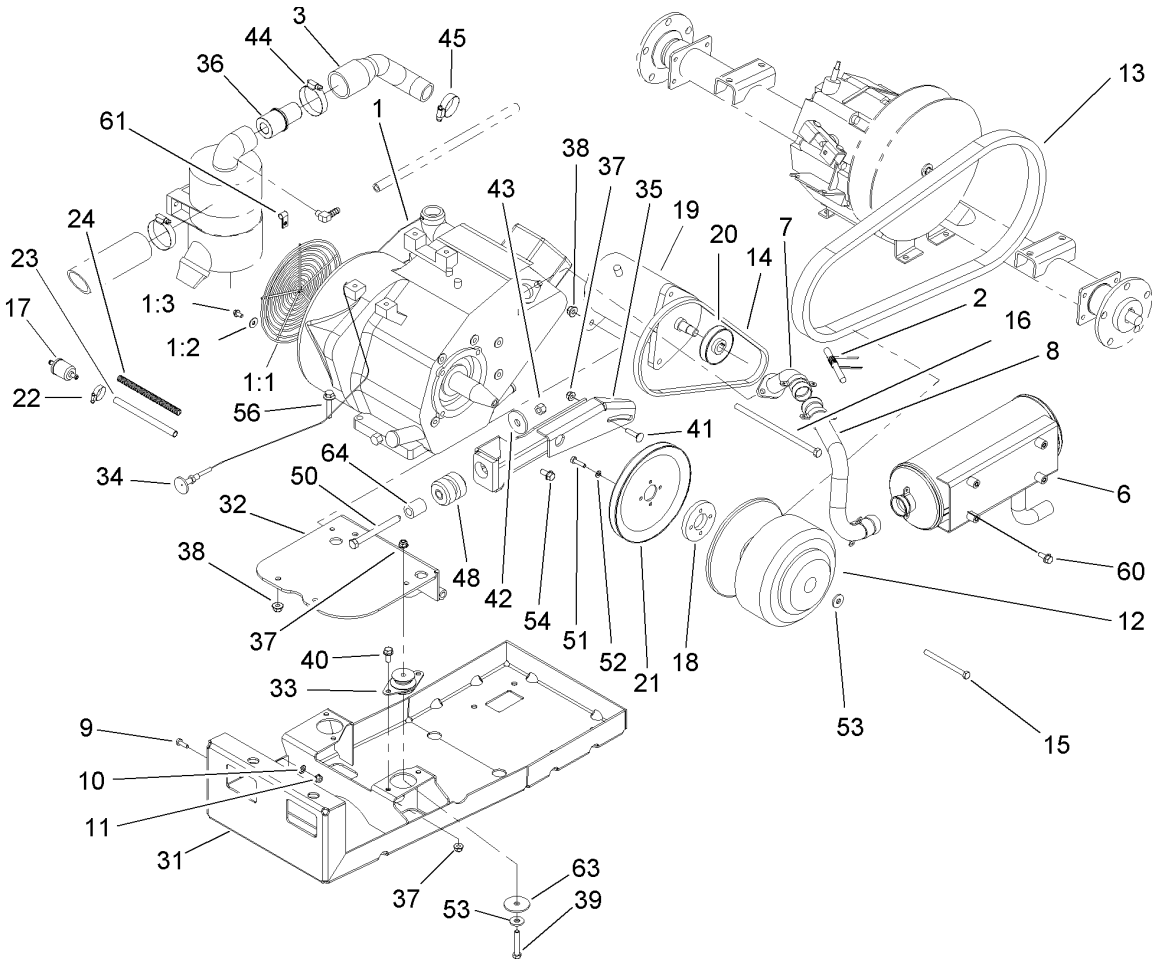

Engine and Clutch Assembly (continued)

Ref	Part No.	Qty.	Description
53	5-0838	3	Washer
54	104-6560	2	Screw-HH
56	3234-19	4	Screw-HHF
60	3234-5	4	Screw-HHF
61	2412-89	1	Clamp
63	63-7400	2	Washer-Rebound
64	104-6557	1	Spacer-Frame

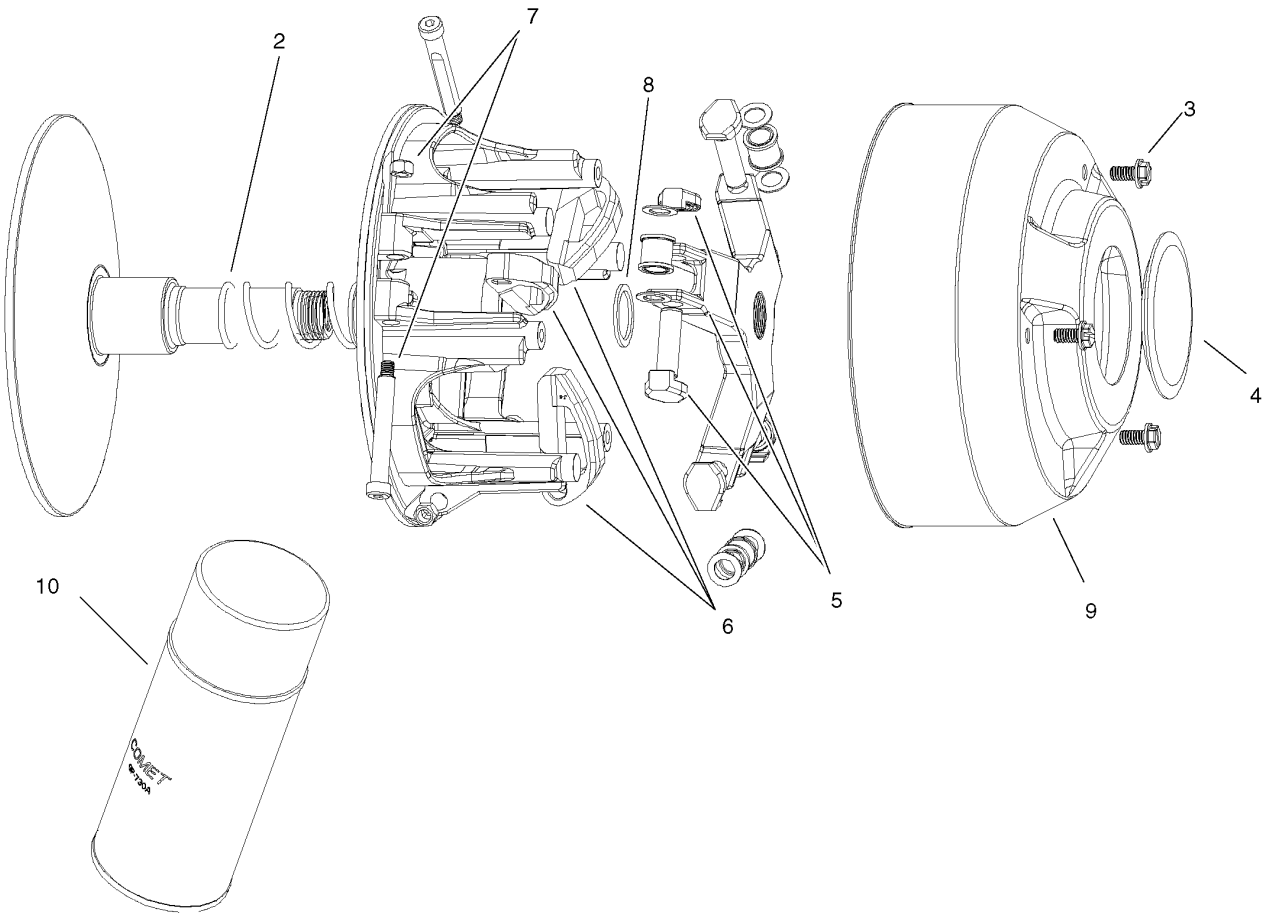

Drive Clutch Assembly No. 99-7103

Ref	Part No.	Qty.	Description
2	104-1686	1	Spring
3	3234-26	3	Screw
4	104-1690	1	Cap
5	108-3047	1	Spider ASM
6	104-7044	1	Cam Arm (Set Of 3)
7	104-4256	1	Pivot Bolt And Nut Kit
8	104-1687	1	Spacer
9	104-7045	1	Cover-Clutch
10	104-7011	1	Lubricant-Dry

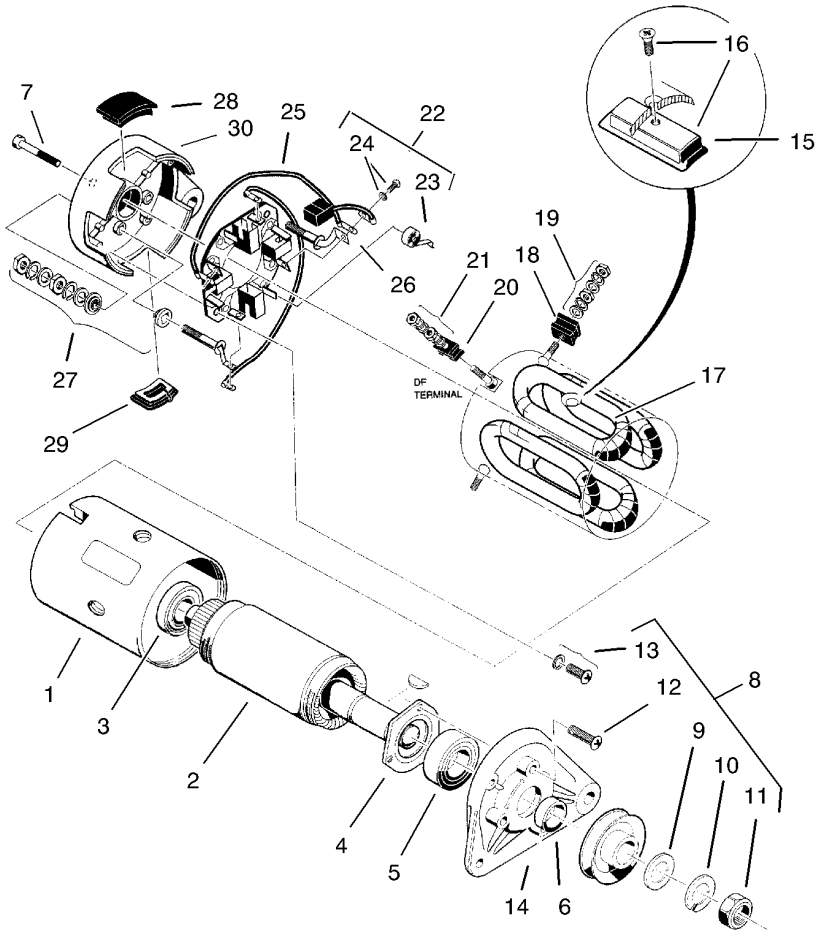

Starter Generator Assembly No. 99-7108

Ref	Part No.	Qty.	Description
❷1		1	Yoke
2	104-1210	1	Armature Kit
3	104-1211	1	Bearing-Ball, Rear
4	104-1212	1	Retainer
5	104-1213	1	Bearing-Ball, Front
6	104-1214	1	Spacer
7	104-1215	2	Bolt
❷8		1	Nut And Screw Set
9	104-1216	1	Washer-Plain
10	104-1217	1	Washer-Spring
11	104-1218	1	Nut-Hex
❷12		3	Screw-Flange
13	104-1219	2	Set-Screw
14	104-1220	1	Bracket-Front
❷15		4	Pole
16	104-1221	1	Set-Pole And Screw
17	104-1222	1	Field Stator Coil ASM
❷18		2	F Mold
19	104-1223	2	Set-Screw
❷20		1	D F Mold
21	104-1224	1	Set-Screw
22	104-1225	1	Brush Holder Kit
23	104-1226	4	Spring-Brush
24	104-1227	1	Brush And Screw Set

Ref	Part No.	Qty.	Description
❷25		2	Brush Connector ASM
❷26		2	A Terminal ASM
27	104-1228	2	Screw And Mold ASM
❷28		1	Cover Set
❷29		1	Cover B
❷30		1	Bracket-Rear

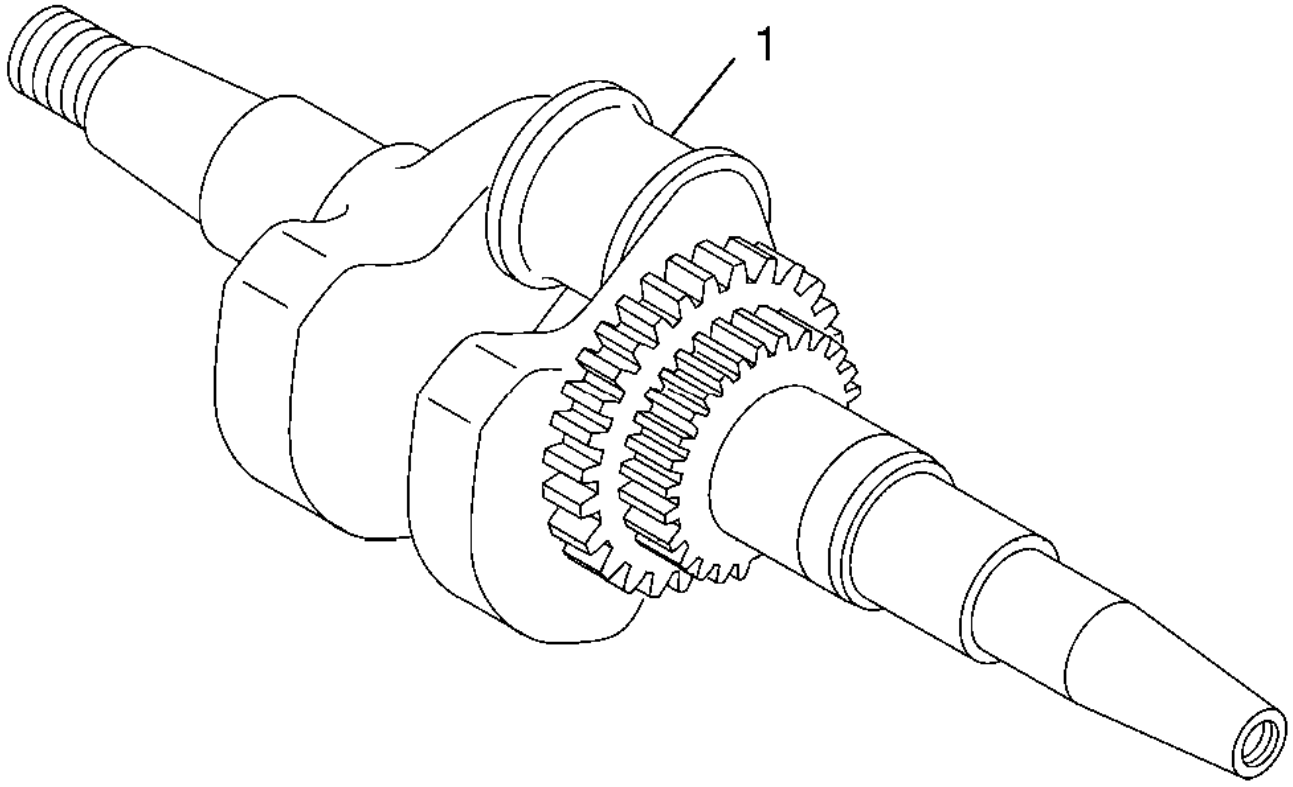

Crankshaft Assembly
Kohler CS12 PA-941621

Ref	Part No.	Qty.	Description
❸1	63 014 17-S	1	Crankshaft

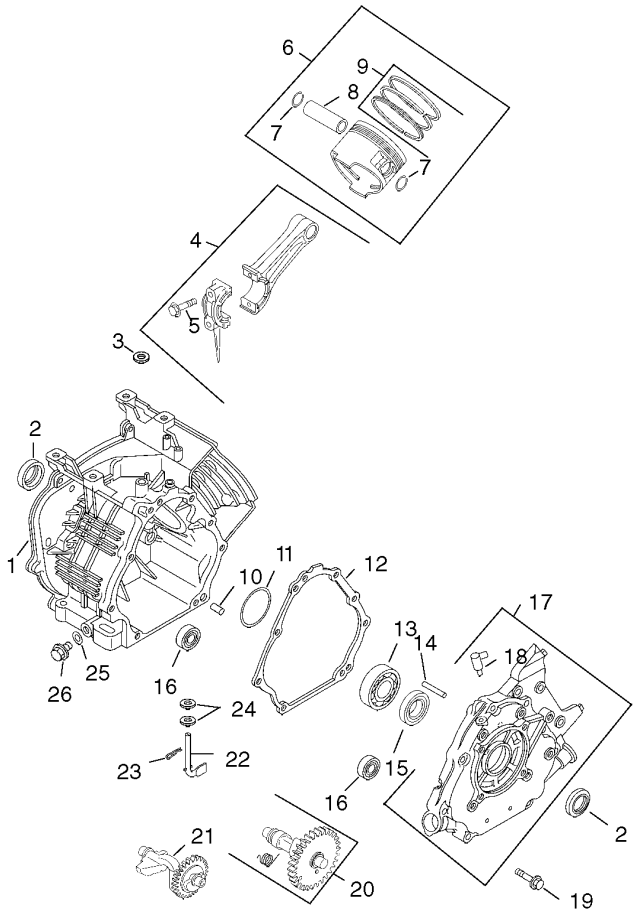

Crankcase Assembly
Kohler CS12 PA-941621

Ref	Part No.	Qty.	Description
❸1	63 561 20-S	1	Crankcase
❸2	63 032 02-S	2	Seal-Oil
❸3	63 032 03-S	1	Seal-Shaft, Governor Cross
❸4	63 067 01-S	1	Rod-Connecting
❸5	63 211 01-S	2	Bolt, Connecting Rod
❸6	63 874 04-S	1	Piston W/Ring Set (STD.)(Includes 7-9)
❸	63 874 05-S	1	Set-Piston W/Ring (.25)
❸	63 874 06-S	1	Set-Piston W/Ring (.50)
❸7	63 018 02-S	2	Retainer-Pin, Piston
❸8	63 380 02-S	1	Pin, Piston
❸9	63 108 01-S	1	Set-Ring (STD.)
❸	63 108 02-S	1	Set-Ring (.25)
❸	63 108 03-S	1	Set-Ring (.50)
❸10	63 380 04-S	2	Pin-Dowel
❸11	63 422 01-S	1	Shim-Crankshaft
❸12	63 041 07-S	1	Gasket-Plate, Closure
❸13	63 030 01-S	1	Bearing
❸14	63 144 03-S	1	Shaft-Governor
❸15	63 030 03-S	1	Bearing
❸16	63 030 02-S	2	Bearing
❸17	63 009 12-S	1	Plate, Closure (Includes 16)
❸18	63 155 01-S	1	Connector
❸19	63 086 31-S	8	Screw-Plate, Closure

Ref	Part No.	Qty.	Description
❸20	63 012 04-S	1	Camshaft (Includes 21)
❸21	63 089 01-S	1	Spring-Acr
❸22	63 144 16-S	1	Shaft, Balance
❸23	63 144 01-S	1	Shaft-Cross, Governor
❸24	63 154 01-S	1	Clip
❸25	63 468 03-S	2	Washer
❸26	63 041 01-S	2	Gasket-Plug
❸27	63 139 01-S	2	Plug-Drain

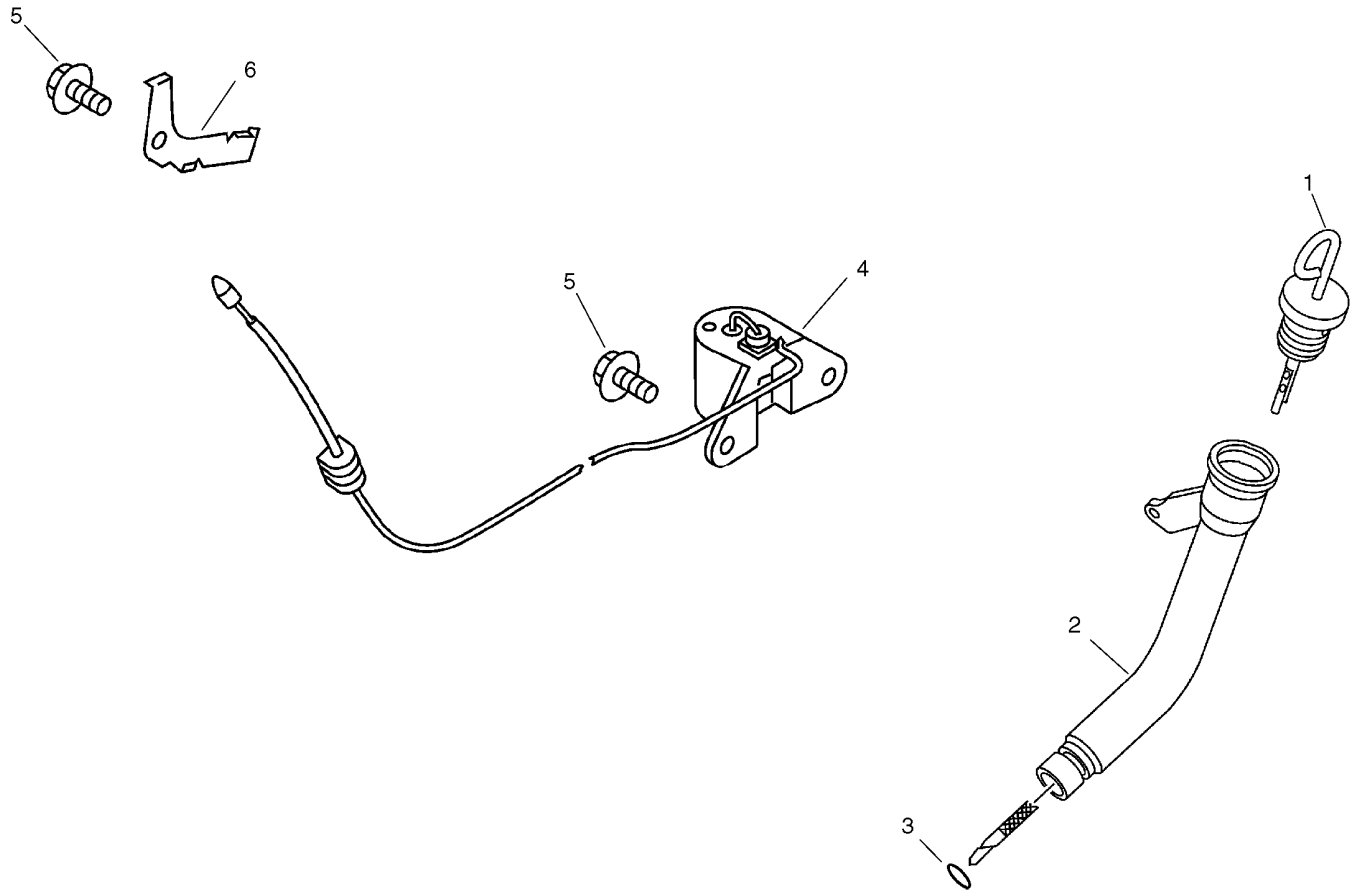

Oil Pan and Lubrication Assembly
Kohler CS12 PA-941621

Ref	Part No.	Qty.	Description
❸1	63 038 02-S	1	Dipstick
❸2	63 123 01-S	1	Tube-Dipstick
❸3	63 153 10-S	1	O-Ring-Tube, Dipstick
❸4	63 099 01-S	1	Switch-Level, Oil
❸5	63 086 14-S	3	Screw
❸6	63 237 01-S	1	Clamp

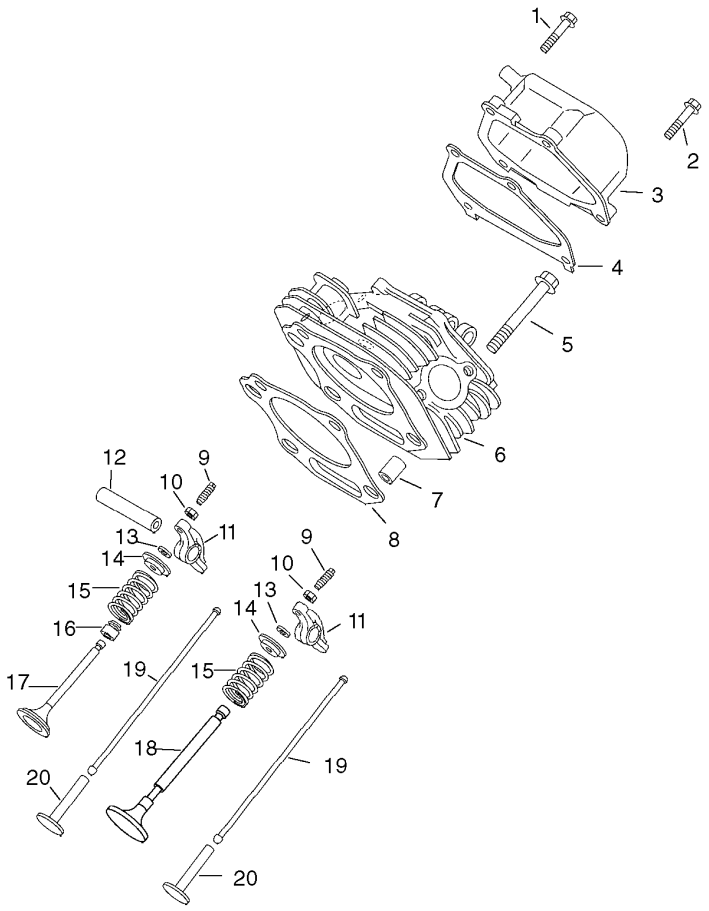

Head, Valve and Breather Assembly
Kohler CS12 PA-941621

Ref	Part No.	Qty.	Description
❸1	63 086 02-S	3	Screw-Cover, Valve
❸2	63 086 44-S	1	Screw-Cover, Valve
❸3	63 096 18-S	1	Cover, Valve
❸4	63 041 04-S	1	Gasket-Cover, Valve
❸5	63 086 01-S	4	Screw-Head, Cylinder
❸6	63 318 07-S	1	Head, Cylinder
❸7	63 380 03-S	2	Pin-Dowel
❸8	63 041 44-S	1	Gasket, Cylinder Head
❸9	63 086 05-S	2	Screw-Adjusting, Valve
❸10	63 100 02-S	2	Nut
❸11	63 186 01-S	2	Arm-Rocker
❸12	63 144 06-S	1	Shaft-Arm, Rocker
❸13	63 462 01-S	2	Keeper-Valve
❸14	63 173 01-S	2	Cap-Spring, Valve
❸15	63 089 05-S	2	Spring-Valve
❸16	63 032 01-S	1	Seal-Stem, Valve
❸17	63 017 01-S	1	Valve-Intake
❸18	63 016 01-S	1	Valve-Exhaust
❸19	63 411 01-S	2	Rod-Push
❸20	63 351 01-S	2	Lifter-Valve

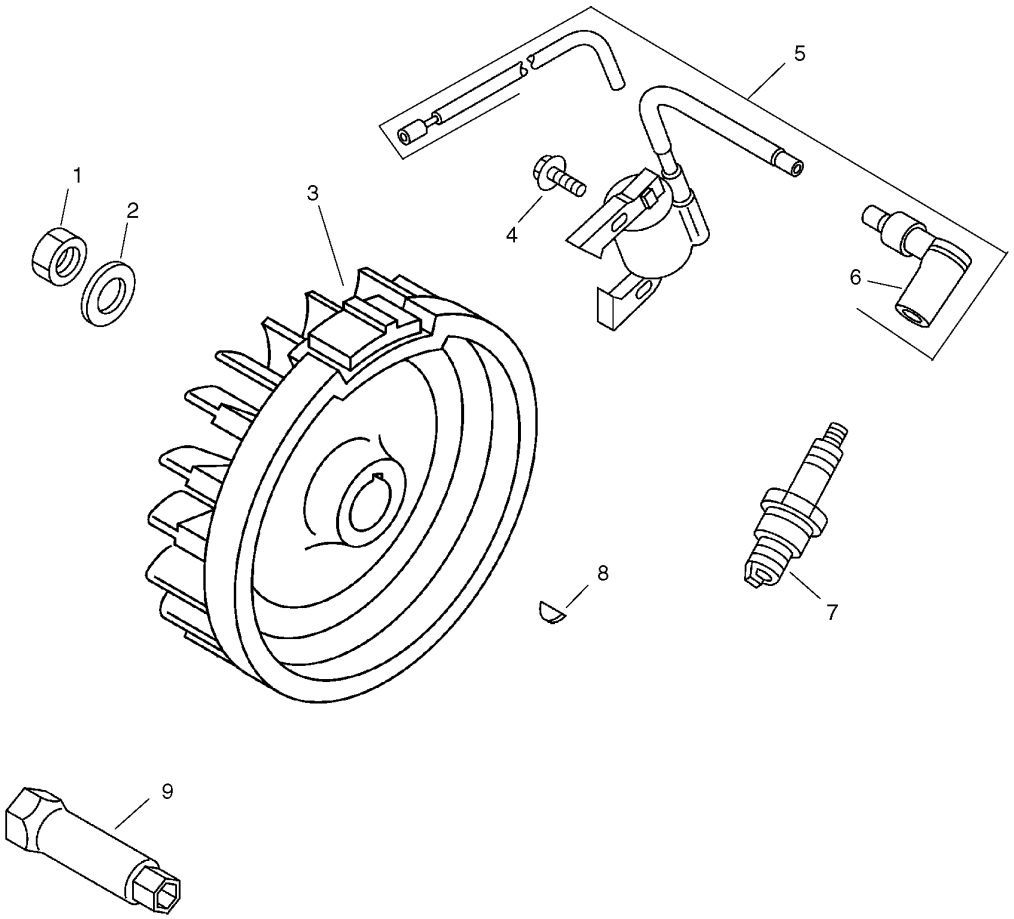

Ignition and Electrical Assembly
Kohler CS12 PA-941621

Ref	Part No.	Qty.	Description
❸1	63 100 04-S	1	Nut-Flywheel
❸2	63 468 06-S	1	Washer-Flywheel
❸3	63 025 12-S	1	Flywheel
❸4	63 086 13-S	2	Screw
❸5	63 755 19-S	1	Kit, Ignition Module
❸6	63 173 02-S	1	Cap-Plug, Spark
❸7	63 132 01-S	1	Plug-Spark
❸8	63 340 02-S	1	Key-Woodruff
❸9	63 213 01-S	1	Wrench-Plug, Spark

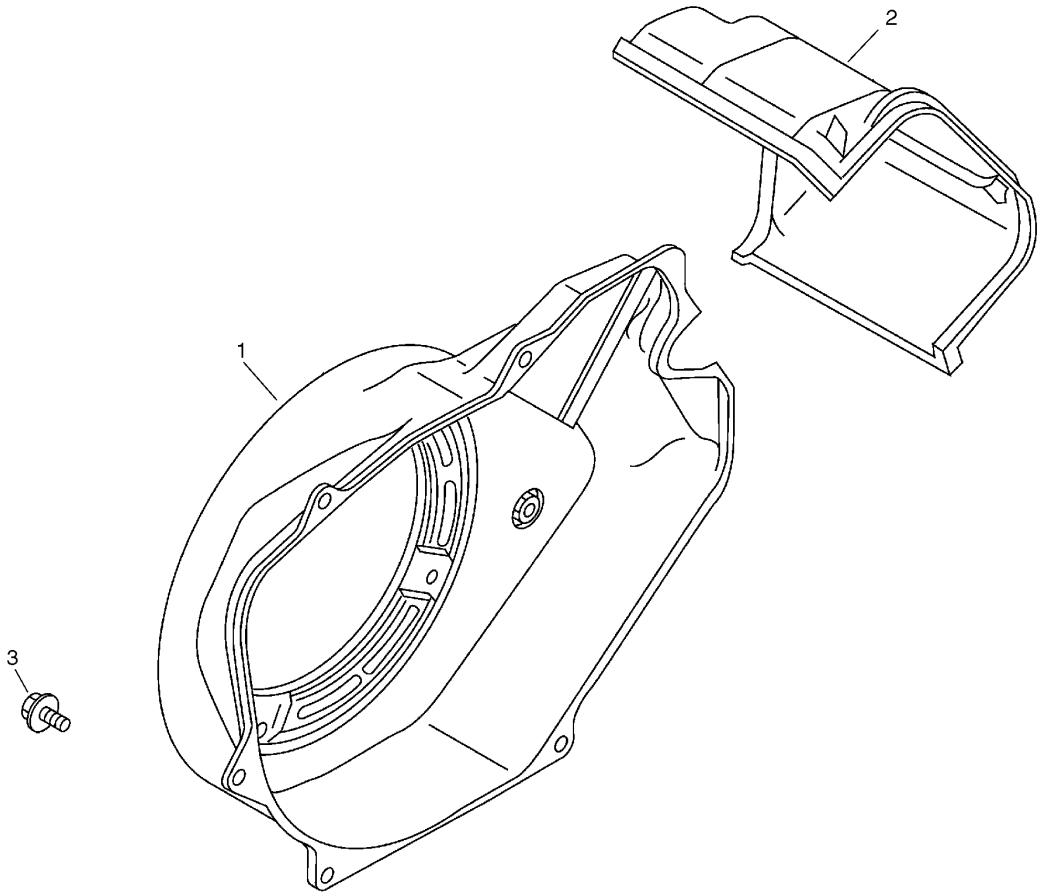

Blower Housing and Baffle Assembly
Kohler CS12 PA-941621

Ref	Part No.	Qty.	Description
❸1	63 027 07-S	1	Housing, Blower
❸2	63 063 01-S	1	Baffle-Cylinder
❸3	63 086 14-S	6	Screw

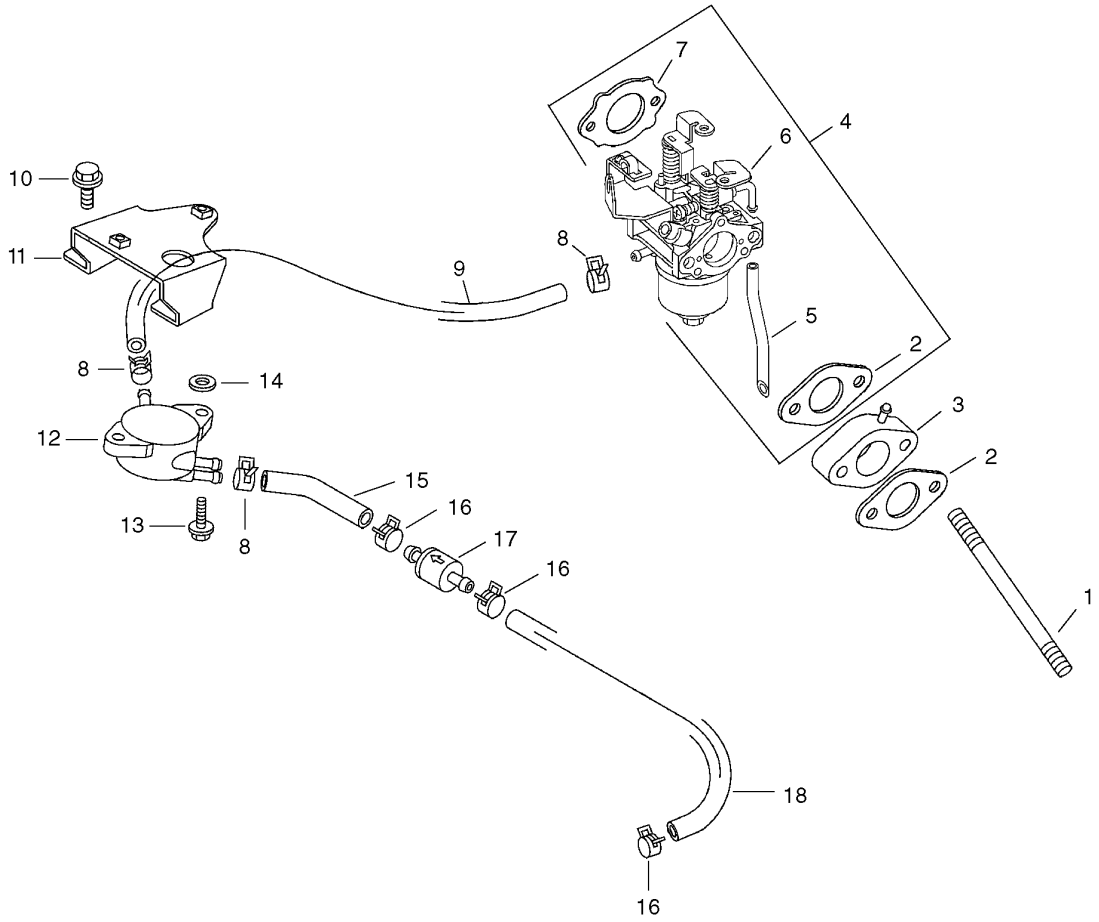

Fuel System Assembly
Kohler CS12 PA-941621

Ref	Part No.	Qty.	Description
1	63 072 06-S	2	Stud-Carburetor
2	63 041 13-S	2	Gasket-Intake
3	63 164 01-S	1	Manifold-Intake
4	63 853 22-S	1	Kit, Carburetor W/Gaskets (Incl. 2 [qty 1], 5, 6)
5	63 053 22	1	Carburetor ASM (For Information Only Not Available Separately)(Service With: 63 757 02-S, 63 757 10-S)
6	63 041 08-S	1	Gasket-Cleaner, Air
7	63 154 07-S	3	Clip
8	63 353 07-S	1	Hose-Pump To Carburetor
9	63 086 21-S	2	Screw-Bracket
10	63 126 22-S	1	Bracket-Pump, Fuel
11	63 393 01-S	1	Pump-Fuel
12	63 086 81-S	2	Screw-Fuel Pump To Bracket
13	63 041 45-S	2	Gasket-Pump, Fuel
14	63 353 06-S	1	Hose-Filter To Pump
15	63 237 19-S	3	Clamp-Line, Vacuum
16	63 050 06-S	1	Filter-Line, Vacuum
17	63 353 08-S	1	Hose-Vacuum, Crankcase To Filter
❶	63 757 02-S	1	Kit-Float
❶	63 757 10-S	1	Kit-Repair, Carburetor

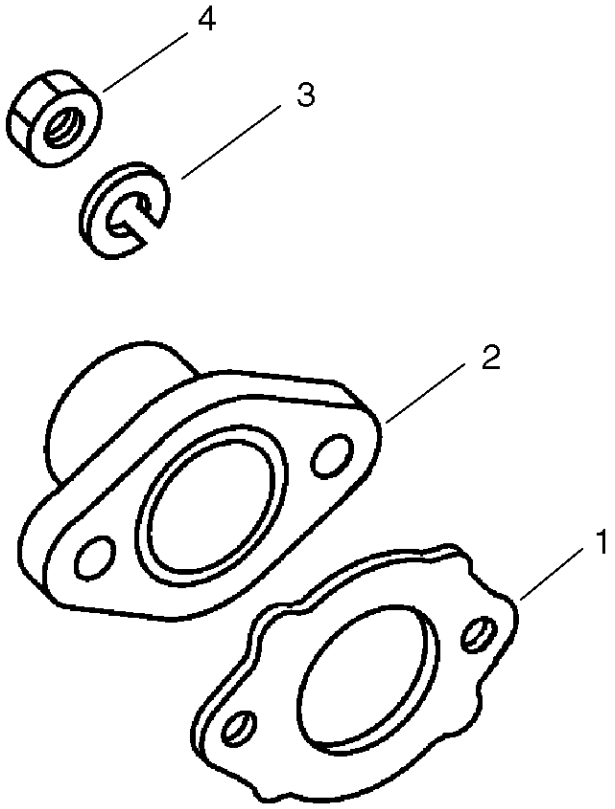

Air Intake and Filtration Assembly
Kohler CS12 PA-941621

Ref	Part No.	Qty.	Description
❸1	63 041 08-S	1	Gasket-Cleaner, Air
❸2	63 054 01-S	1	Elbow-Cleaner, Air
❸3	63 468 31-S	2	Washer-Spring
❸4	63 100 03-S	2	Nut-Exhaust
❶❸	63 113 28-S	1	Label-Emissions

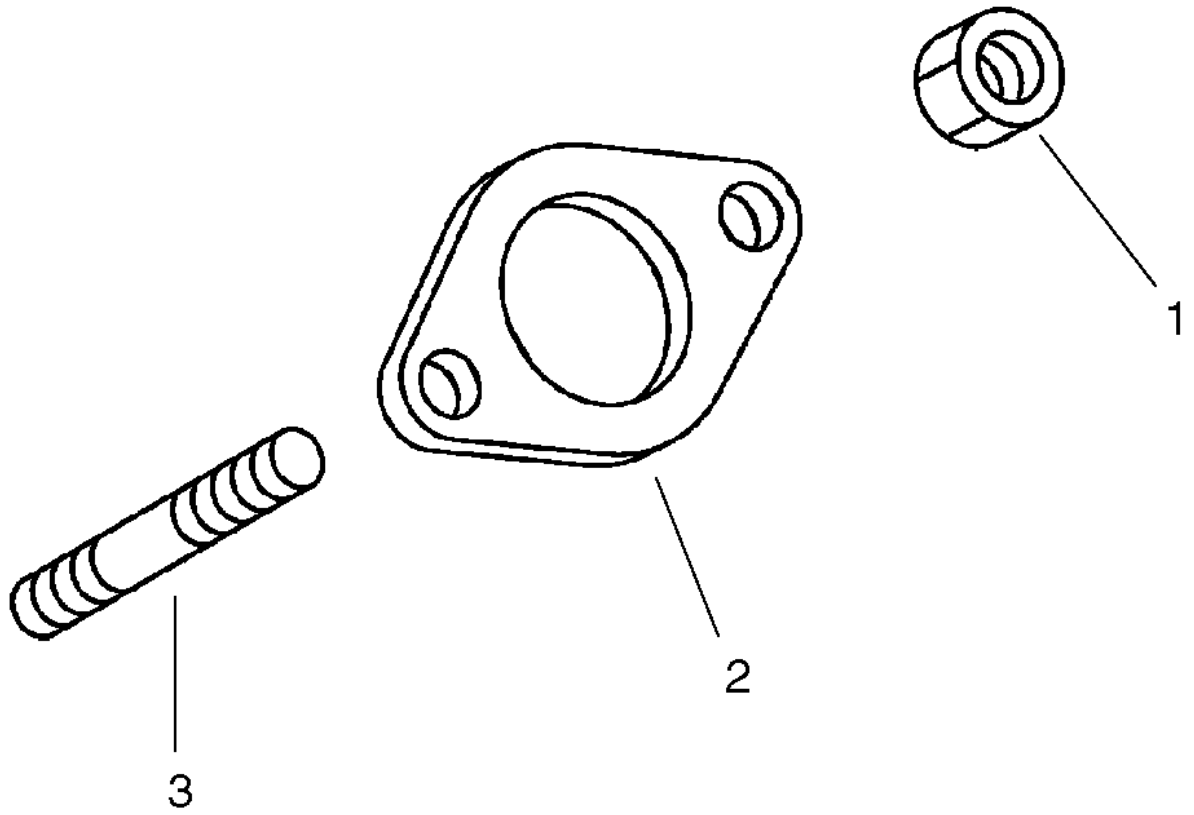

Exhaust Assembly
Kohler CS12 PA-941621

Ref	Part No.	Qty.	Description
❸1	63 100 03-S	2	Nut-Exhaust
❸2	63 041 06-S	1	Gasket-Exhaust
❸3	63 072 01-S	2	Stud-Exhaust
❶❸	63 755 01-S	1	Set-Gasket

NOTES


TORO®