FORM NO. 3314-373 REV. A

TORO®

MODEL NO. 16585-1000001 & UP

PARTS CATALOG

21" H.P. SIDE DISCHARGE

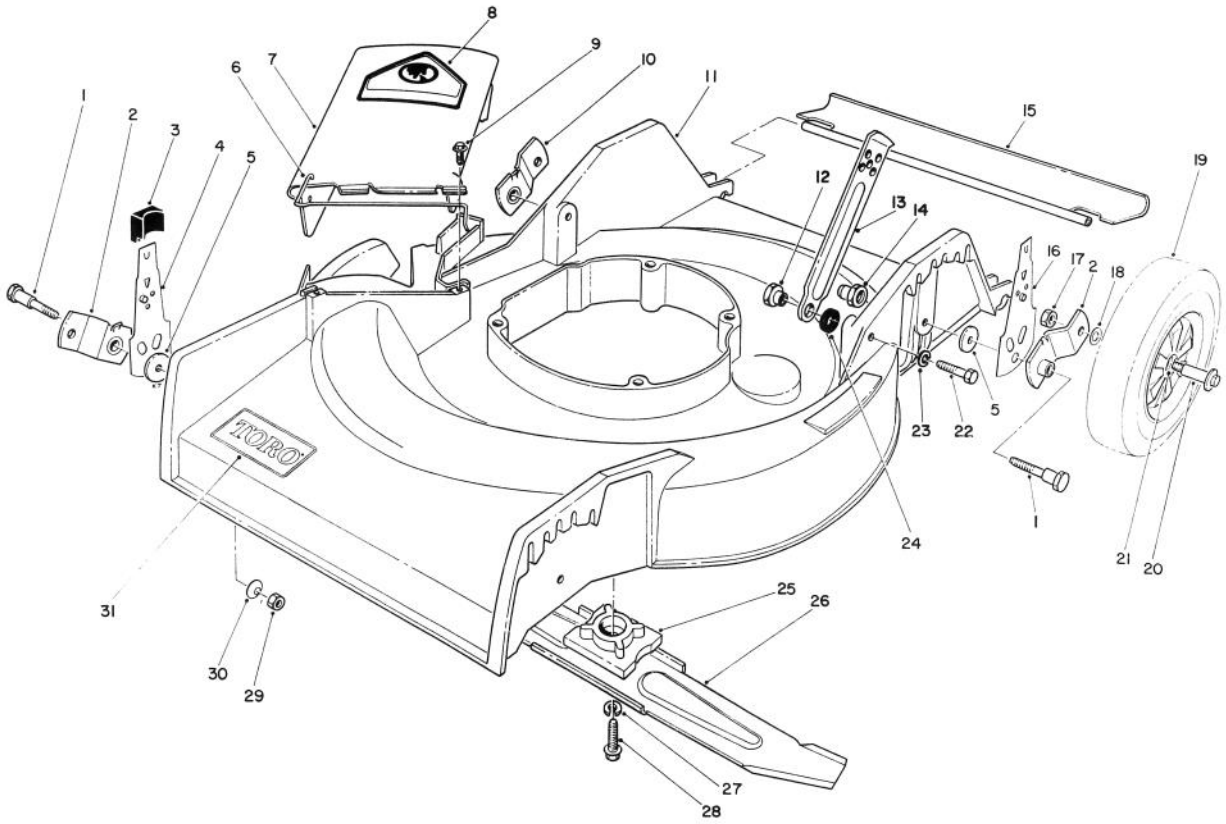

C-0630

HOUSING ASSEMBLY

Ref. No.	Part No.	Description	No. Used
1	3-0655	Screw - Pivot	4
2	20-2140	Pivot Arm "A"	2
3	25-7740	Knob - Spring Arm	4
4	66-6070	Spring Arm Front - R.H.	1
*	66-6010	Spring Arm Front - L.H.	1
5	33-0390	Washer - Pivot	4
6	20-2640	Hinge - Spring	1
7	13-4049	Deflector Assembly (Incl. Ref. #6 & 8)	1
8	39-5770	Decal - Danger	1
9	46-6811	Screw & Washer Assembly	2
10	20-2130	Pivot Arm "B"	2
11	13-2439	Housing	1
12	27-6520	Nut - Shoulder	2
13	82-7620	Latch - Handle	2
14	12-2080	Nut - Shoulder	2
15	66-5990	Shield - Rear	1

Ref. No.	Part No.	Description	No. Used
16	66-6030	Spring Arm - Rear	2
17	52-3620	Nut - Lock	4
18	40-1940	Washer - Wheel Bolt	4
19	27-6200	Wheel & Tire Assembly (Incl. Ref. #21)	4
20	27-6230	Bolt - Wheel	4
21	27-6250	Bushing - Wheel	8
22	322-7	Hex Hd. Capscrew	2
23	3253-4	Lockwasher	2
24	3-3287	Spacer - Handle Latch	2
25	49-7900	Retainer - Blade	1
26	20-2720	Blade	1
27	3253-22	Washer - Lock	1
28	26-0671	Screw - Blade	1
29	3296-29	Nut - Lock	2
30	3290-456	Washer - Belleville	2
31	70-2200	Decal - Toro	1

*Not Illustrated

©The TORO Company - 1990

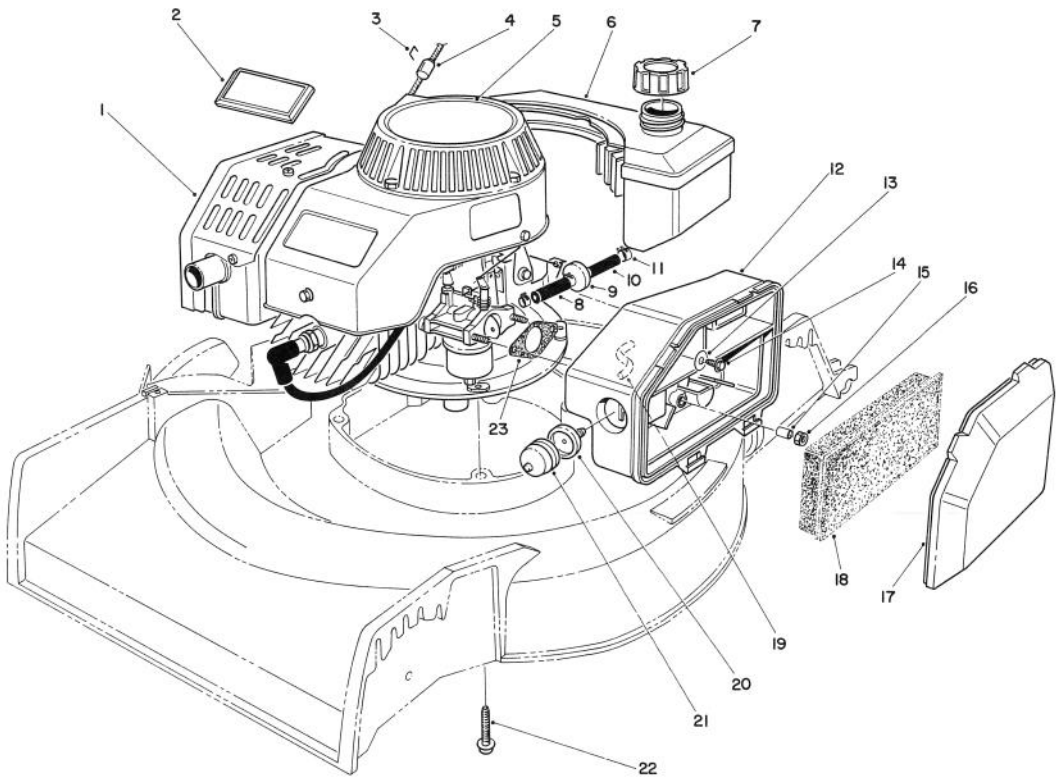

C-0296

ENGINE ASSEMBLY

Ref. No.	Part No.	Description	No. Used
1	51-0413	Engine - Complete	1
2	46-8290	Plate - Toro Logo	1
†3		Staple	1
4	47-2480	Stop - Rope	1
5	66-0510	Decal - Recoil	1
6	81-0162	Fuel Tank Assembly	1
7	55-3575	Gas Cap Assembly	1
8	51-3216	Line - Fuel	1
9	56-6360	Filter - Fuel	1
10	51-3215	Line - Fuel	1
11	2412-95	Clamp - Fuel Line	4
12	63-9330	Cleaner - Air	1

Ref. No.	Part No.	Description	No. Used
13	3256-16	Flat Washer	1
14	51-2690	Screw - Hex Washer Hd.	1
15	62-3980	Sleeve	2
16	50-7180	Nut - Lock	2
17	63-9340	Cover - Air Cleaner	1
18	63-9380	Foam Element - Air Cleaner	1
19	44-3172	Hose - Primer	1
20	44-2750	Body - Primer	1
21	66-7460	Bulb - Primer	1
22	66-9302	Screw - Hex Flange Hd. Cap	3
23	81-0090	Gasket	1

†Obtain Locally

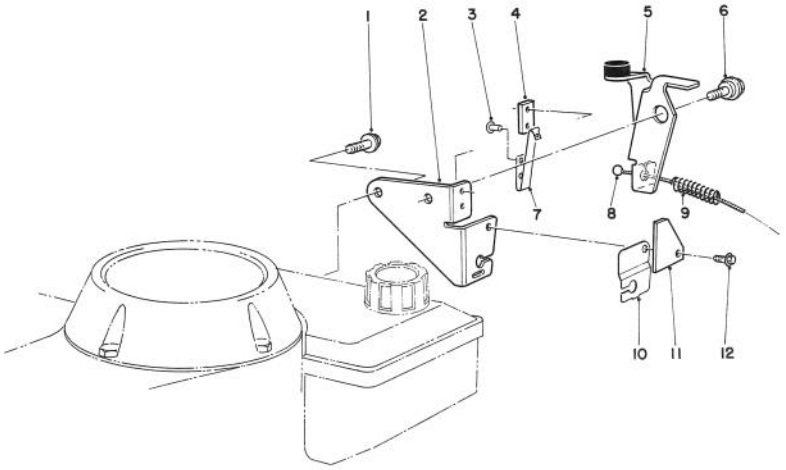

C-0185

BRAKE ASSEMBLY

Ref. No.	Part No.	Description	No. Used
1	46-0790	Screw - Self Tapping	1
2	53-4620	Plate - Mounting	1
3	3290-459	Rivet	2
4	77-5260	Strap - Insulation	1
5	66-5380	Brake Plate Assembly	1
6	56-6190	Screw - Shoulder, Metric	1
7	60-9010	Strap - Ground	1

Ref. No.	Part No.	Description	No. Used
8	56-6093	Cable - Brake	1
9	66-5370	Spring - Compression	1
10	53-4610	Clamp - Cable	1
11	53-4690	Stop - Ground Strap	1
12	12-5450	Screw - Self Tapping	1
*	12-4599	Mounting Plate Assembly (Incl. Ref. #2-4, & 7)	1

*Not Illustrated

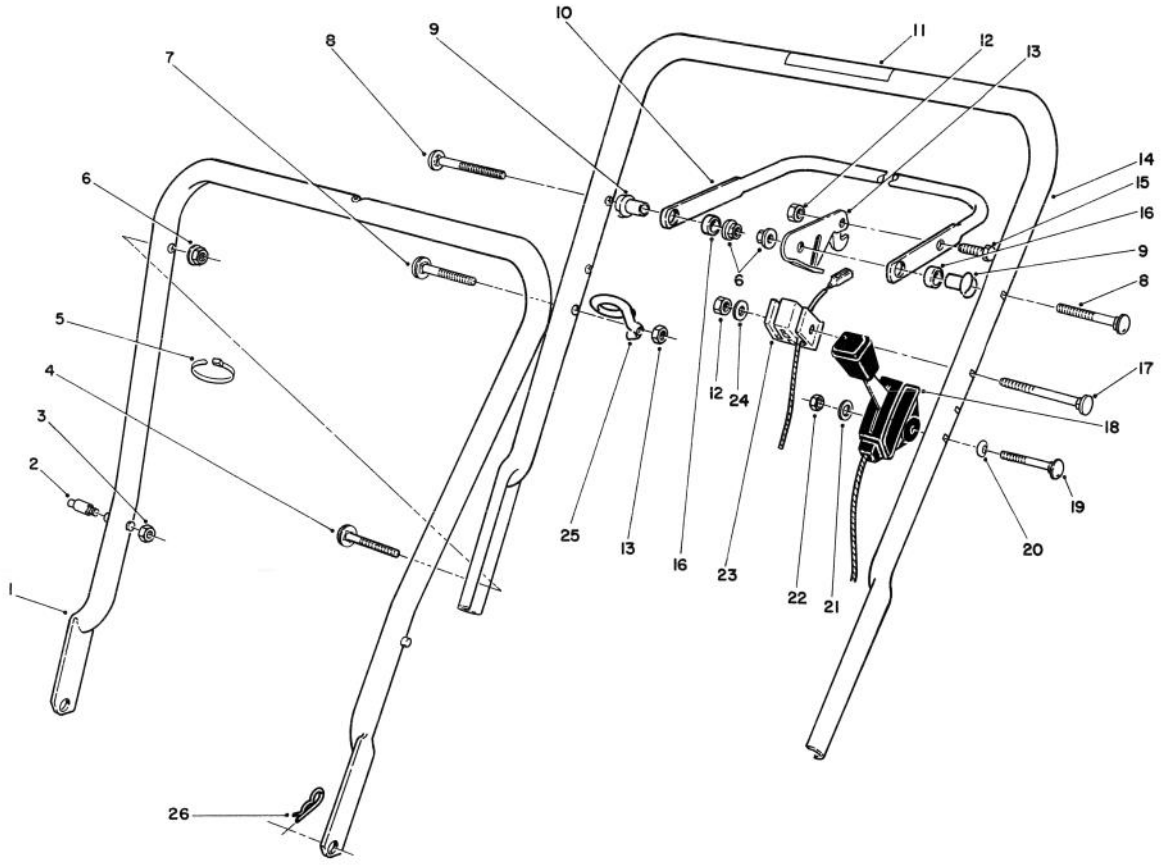

C-0631

HANDLE ASSEMBLY

Ref. No.	Part No.	Description	No. Used
1	49-1690	Lower Handle Assembly	1
†2	49-2750	Pin - Handle	2
†3	3296-47	Nut - Lock	2
4	17-9424	Screw - Handle	2
5	3290-378	Cable - Tie	1
6	3296-58	Nut - Flange Lock	4
7	46-6433	Screw - Handle	1
8	17-9421	Screw - Handle	2
9	49-1630	Support - Spacer	2
10	71-3080	Bar - Control	1
11	56-6280	Decal - Warning	1
12	3296-42	Nut - Lock	3
13	66-5350	Lever - Control	1
14	12-5669	Handle - Upper (Incl. Ref. #11)	1
15	321-3	Screw - Hex Hd. Cap	1

Ref. No.	Part No.	Description	No. Used
16	256-276	Spacer - Nylon	2
17	46-6434	Screw - Handle	1
18	49-4197	Control - Throttle (Bend Type #1) (Sheath Lg. 38") (Wire Lg. 2 1/4")	1
19	3290-424	Screw - Hex Hd. Machine	2
20	57-3150	Washer - Curved	2
21	3256-14	Washer - Flat	2
22	3296-2	Nut - Lock	2
23	46-6980	Support - Cable	1
24	3256-22	Washer - Flat	1
25	46-8080	Guide - Rope	1
26	3290-255	Cotter - Hairpin	2
*	14-1959	Loose Parts	1

†Service Replacement Parts
*Not Illustrated

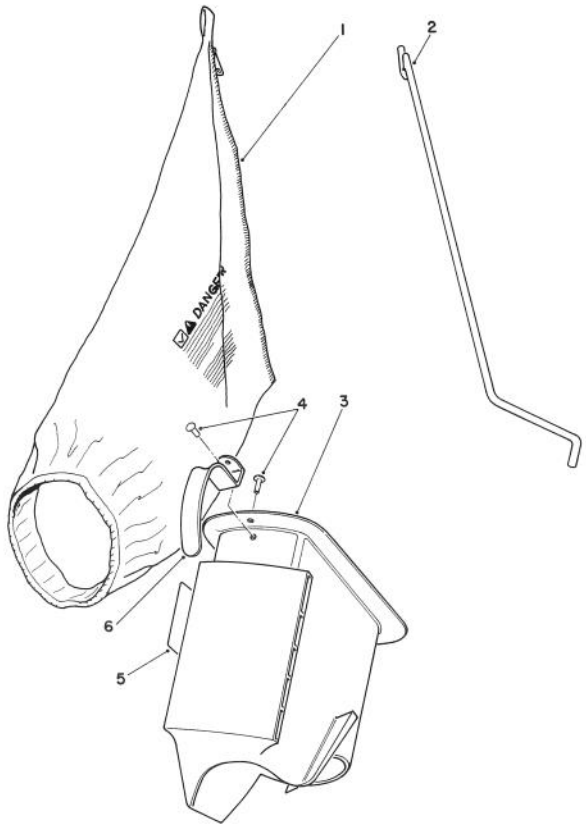

C–0187

BAGGING KIT NO. 47–6510 (OPTIONAL)

Ref. No.	Part No.	Description	No. Used
1	6–0929	Grass Bag	1
2	47–5830	Rod – Bag	1
3	6–1089	Chute – Grass (Incl. Ref. #4 & 6)	1

Ref. No.	Part No.	Description	No. Used
4	3295–26	Rivet	2
5	36–5230	Decal – Bag Chute	1
6	20–4650	Handle – Chute	1

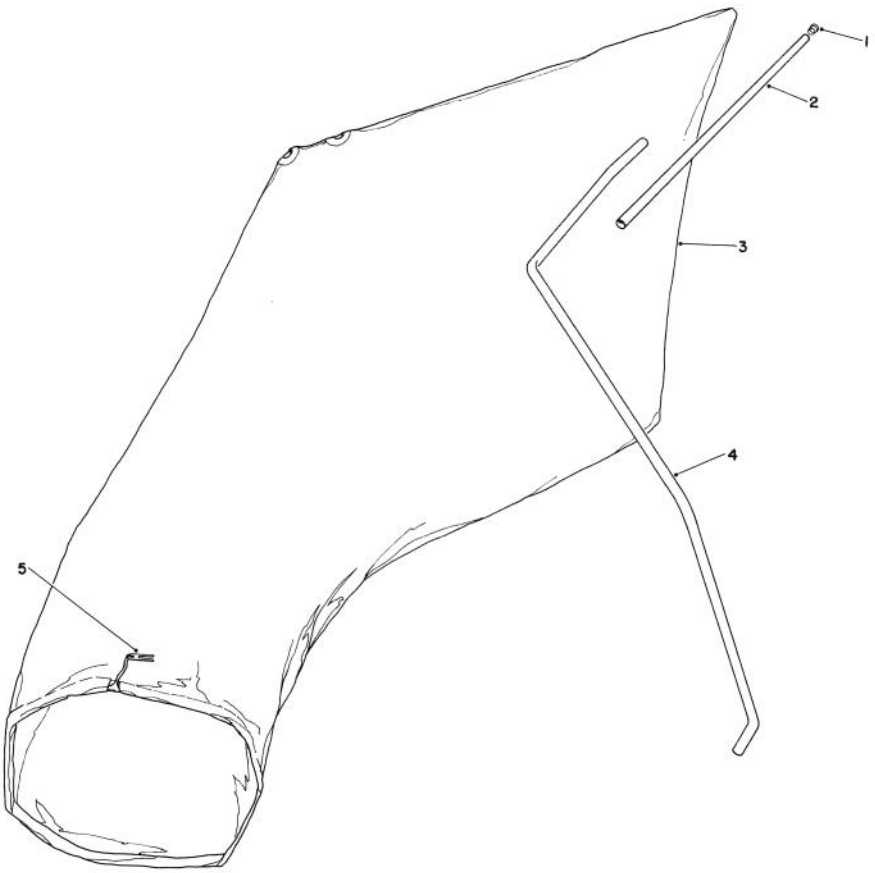

C-0186

GIANT BAGGING KIT NO. 29-9750 (OPTIONAL)

Ref. No.	Part No.	Description	No. Used
1	2410-29	Cap	1
2	29-7000	Tube 25"	1
3	8-4719	Bag (Incl. Ref. #5)	1

Ref. No.	Part No.	Description	No. Used
4	22-4820	Rod - Hanger	1
5	3-2781	Fasteners - Bag Cord	1

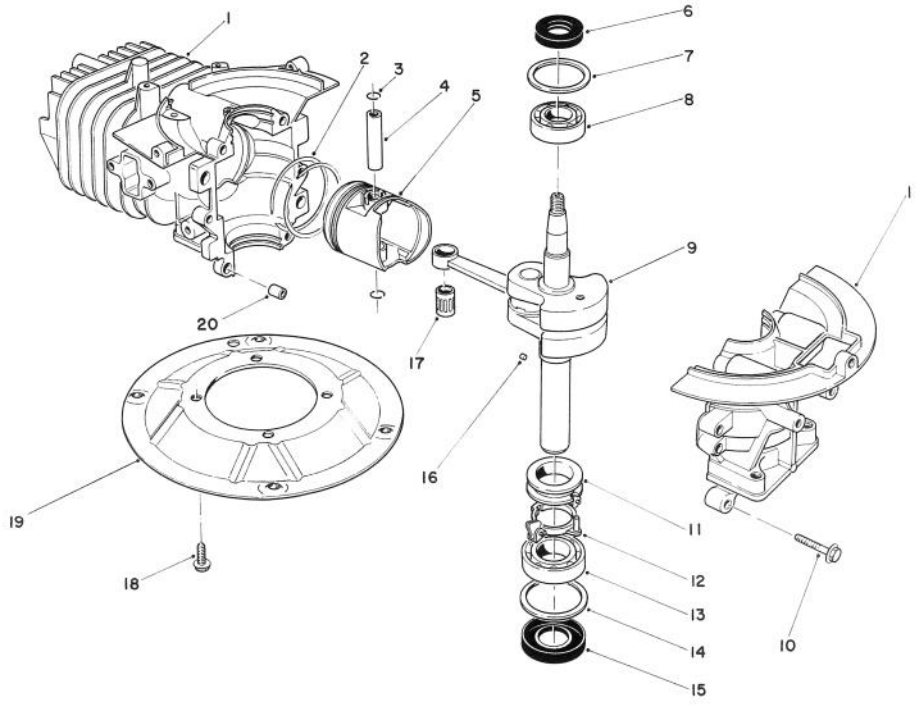

C-0190

CRANK SHAFT ASSEMBLY
(Model No. 47PL0-1)

Ref. No.	Part No.	Description	No. Used
1	81-2800	Crankcase/Cylinder Ass'y	1
2	81-0590	Ring Set	1
3	81-0620	Circlip	2
4	81-0600	Pin - Wrist	1
5	81-0580	Piston (58mm)	1
6	81-0720	Oil Seal - Upper	1
7	81-0710	Thrust Washer - Upper	1
8	81-0690	Bearing - Upper (20mm)	1
9	81-4600	Crankshaft/Connecting Rod Assembly	1
10	81-0540	Bolt (30mm Lg.)	6

Ref. No.	Part No.	Description	No. Used
11	81-0770	Spacer - Governor	1
12	81-0750	Bracket - Governor Arm	1
13	81-0700	Bearing - Lower (25mm)	1
14	81-0730	Thrust Washer - Lower	1
15	81-0740	Oil Seal - Lower	1
16	81-0760	Pin - Crankshaft	1
17	81-0610	Bearing - Wrist Pin	1
18	81-0570	Bolt (20mm Lg.)	4
19	81-0560	Plate - Mounting	1
20	81-0520	Pin - Crankcase	2
*	12-7699	Short Block Assembly	1

*Not Illustrated

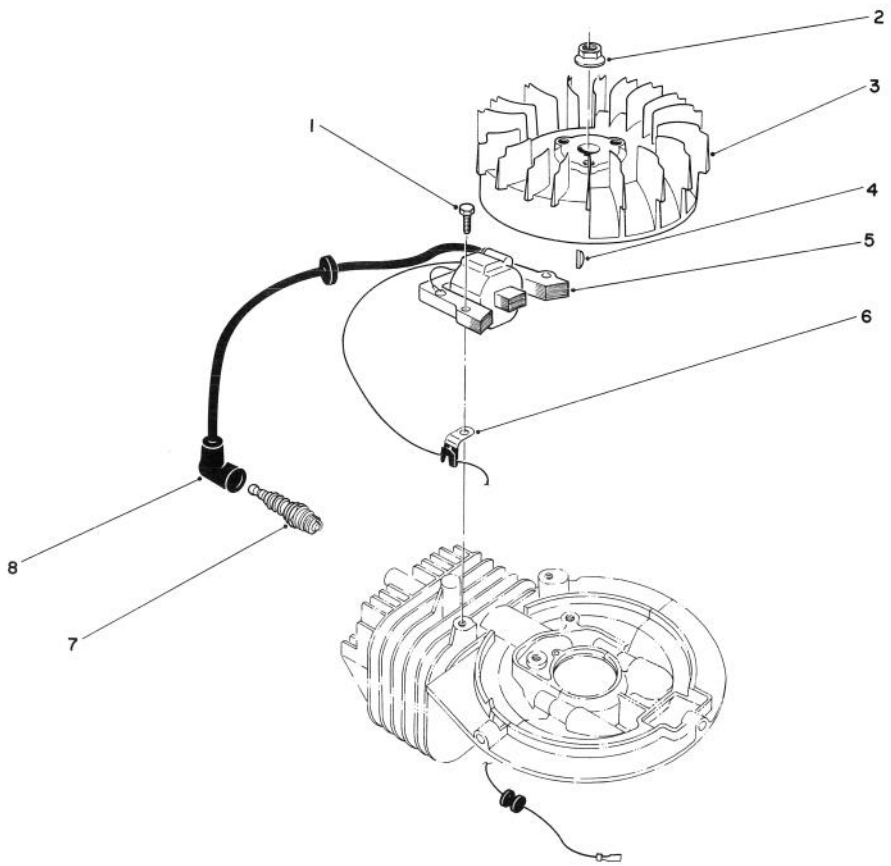

C-0176

IGNITION ASSEMBLY
(Model No. 47PL0-1)

Ref. No.	Part No.	Description	No. Used
1	81-5680	Capscrew - Hex Hd.	2
2	81-1330	Nut	1
3	81-2810	Flywheel - Magneto	1
4	81-2370	Key - Flywheel	1
5	81-2820	Coil/Ignition Assembly	1

Ref. No.	Part No.	Description	No. Used
6	81-1480	Clamp	1
7	81-0181	Spark Plug	1
8	81-1500	Cover - Spark Plug	1
*	41-7650	Puller - Flywheel	1

*Not Illustrated

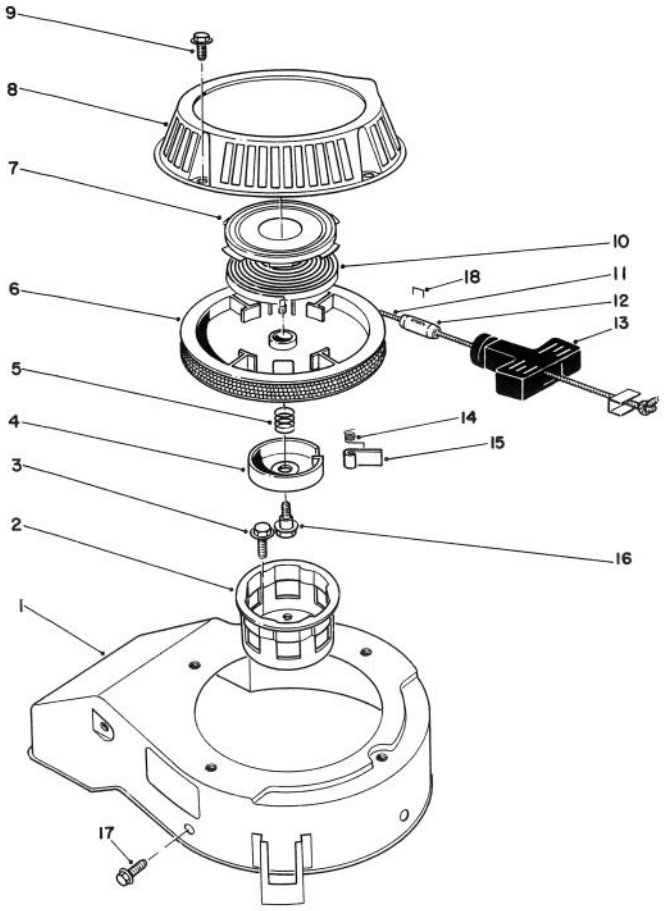

C-0178

RECOIL ASSEMBLY
(Model No. 47PL0-1)

Ref. No.	Part No.	Description	No. Used
1	81-2070	Cover - Cooling Fan	1
2	81-1290	Pulley - Starter Cup	1
3	81-1300	Bolt (16mm Lg.)	3
4	81-1250	Retainer - Dog	1
5	81-1240	Spring - Compression	1
6	81-1210	Reel - Rope Pulley	1
7		Retainer Cup - Recoil Spring	1
8	81-2090	Case - Recoil	1
9	81-1280	Bolt	4
10		Spring - Recoil	1
11	81-1270	Rope	1
12	81-3980	Stop - Recoil	1

Ref. No.	Part No.	Description	No. Used
13	81-1630	Handle - Recoil	1
14	81-1220	Spring - Dog	1
15	81-1230	Dog	1
16	81-1260	Bolt - Shoulder	1
17	81-1170	Bolt - Self Tapping (15mm Lg.)	3
†18		Staple	1
*	81-2040	Starter Assembly (Incl. Ref. #4-16)	1
*	81-2300	Spring & Retainer (Incl. Ref. #6 & 9)	1

*Not Illustrated
†Obtain Locally

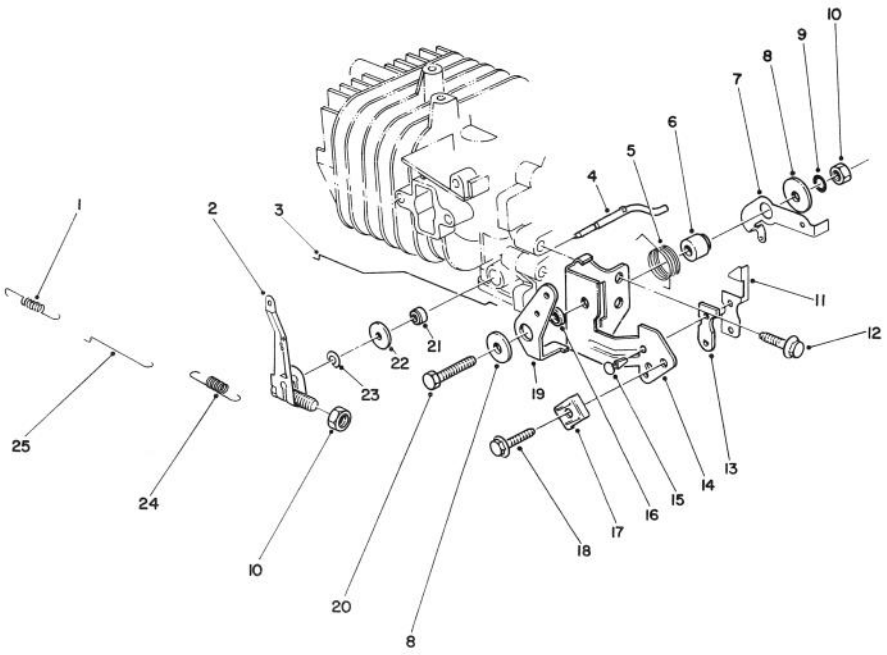

C-0192

GOVERNOR ASSEMBLY
(Model No. 47PL0-1)

Ref. No.	Part No.	Description	No. Used
1	81-0920	Spring - Carburetor Rod	1
2	81-5420	Governor Arm/Bolt Ass'y	1
3	81-5410	Rod - Choke	1
4	81-2880	Shaft - Governor	1
5	81-2460	Spring - Choke Control Lever	1
6	81-1770	Spacer - Governor Spring Lever	1
7	81-2850	Lever - Governor Spring	1
8	81-1750	Washer - Choke Control Lever	2
9	81-1450	Washer - Lock	1
10	81-0900	Nut	2
11	81-1840	Terminal - Kill Switch	1
12	81-1170	Bolt - Self Tapping (15mm Lg.)	1

Ref. No.	Part No.	Description	No. Used
13	81-1830	Insulator - Kill Switch	1
14	81-2420	Bracket - Throttle Control	1
15	81-1850	Rivet - Kill Switch	2
16	81-2470	Spacer - Choke Control Lever	1
17	81-2430	Clamp - Cable	1
18	50-0130	Bolt - Cable Clamp	1
19	81-1710	Lever - Choke Control	1
20	81-1730	Bolt - Throttle Control Brkt.	1
21	81-0850	Oil Seal - Governor Shaft	1
22	81-0860	Washer	1
23	81-0870	E-Ring	1
24	81-2830	Spring - Governor	1
25	81-0910	Rod - Carburetor	1

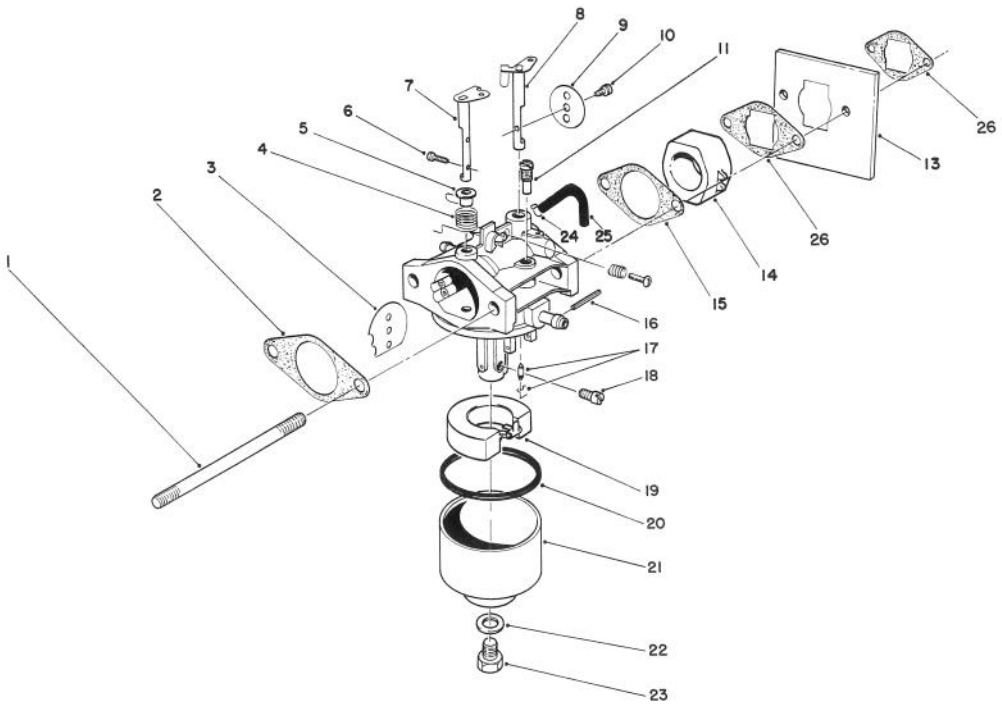

C-0191

CARBURETOR ASSEMBLY (Model No. 47PL0-1)

Ref. No.	Part No.	Description	No. Used
1	81-5450	Stud Bolt - Carburetor	2
2	81-0090	Gasket	2
3	81-0240	Valve - Choke	1
4	81-0230	Spring - Choke	1
5	81-0220	Bushing - Choke Valve	1
6	81-2160	Screw	2
7	81-1950	Shaft - Choke	1
8	81-0250	Shaft - Throttle	1
9	81-0260	Valve - Throttle	1
10	81-0270	Screw - Throttle Valve	1
11	81-1030	Jet - Pilot (#40)	1
13	81-5490	Shield - Carburetor	1
14	81-5440	Insulator - Carburetor	1
15	81-0780	Gasket	1
16	81-5600	Pin	1
17	81-4910	Needle Valve/Spring Wire	1

Ref. No.	Part No.	Description	No. Used
18	81-1060	Jet - Main (#75)	1
*	81-2340	Jet - Main (#72.5) High Alt., Above 6000 (Optional)	1
19	81-0970	Float	1
20	81-1010	Gasket - Float Bowl	1
21	81-5660	Bowl - Float	1
22	81-1020	Gasket - Bowl Screw	1
23	81-5670	Screw - Bowl	1
*	12-6379	Carburetor Kit (Incl. Ref. #2, 15, 17, 20, & 22)	1
*	81-5430	Carburetor Assembly - Complete	1
24	81-5460	Clamp - Vent Tube	1
25	81-5470	Tube - Vent	1
26	81-2320	Gasket	2

*Not Illustrated

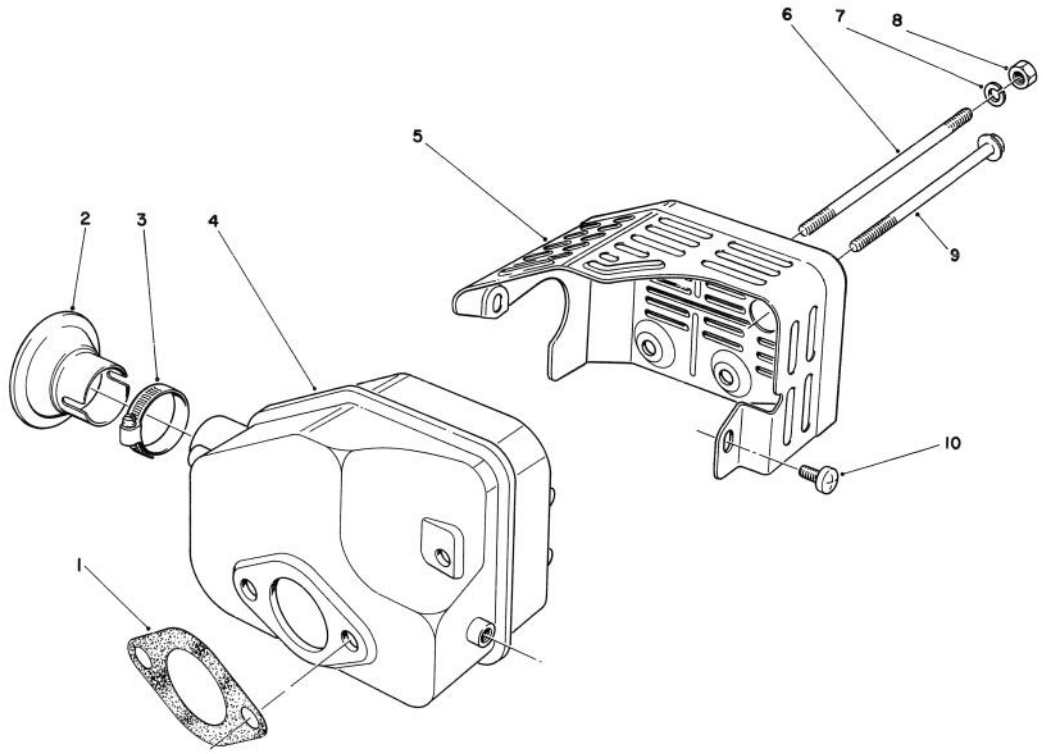

T-0667

MUFFLER ASSEMBLY
(Model No. 47PL0-1)

Ref. No.	Part No.	Description	No. Used
1	81-1080	Gasket - Muffler	1
*2	81-0200	Spark Arrester	1
†3		Clamp	1
4	81-5690	Muffler	1
5	81-2450	Cover - Muffler	1

Ref. No.	Part No.	Description	No. Used
6	81-1100	Bolt	2
7	81-1120	Washer - Lock	2
8	81-1110	Nut	2
9	81-1150	Bolt - Self Tapping	1
10	81-1140	Screw - Phillips Hd.	2

*Optional Equipment
†Obtain Locally