FORM NO. 3314-377

TORO®

MODEL NO. 20563-1000001 & UP

PARTS CATALOG

# 21" H.P. REAR BAGGER

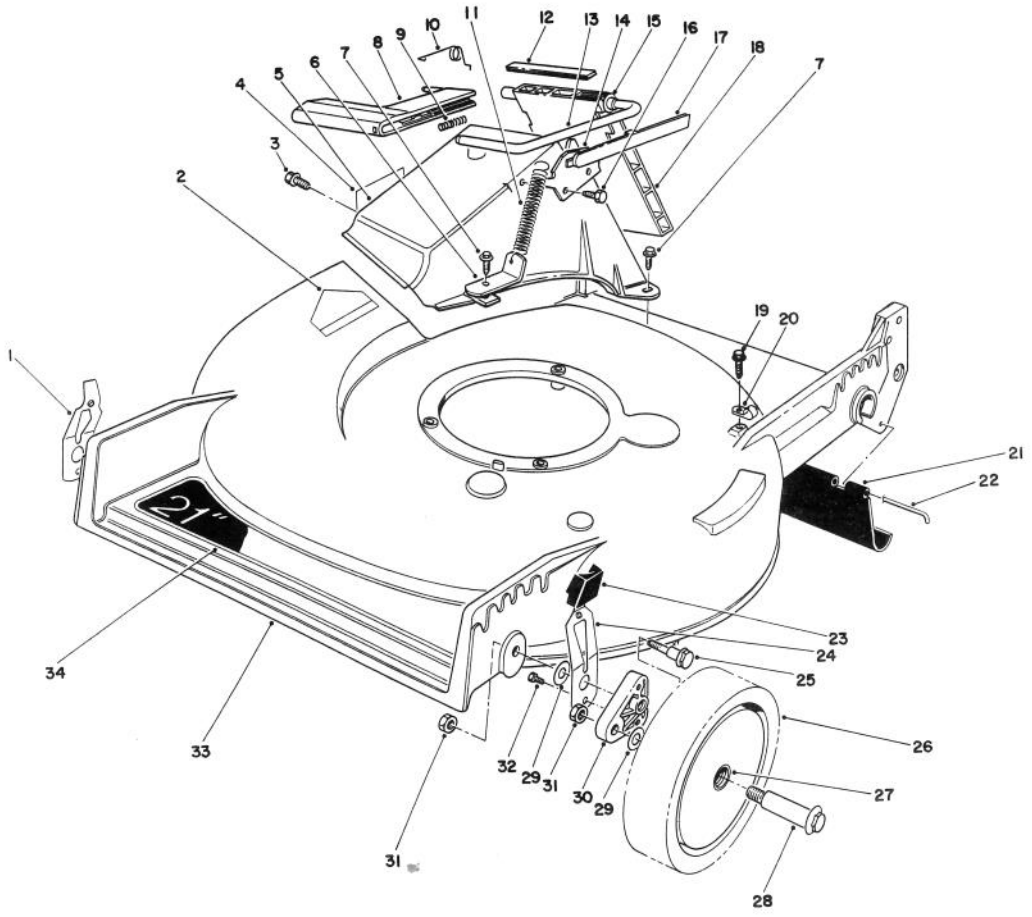


C-0779

## HOUSING ASSEMBLY

| Ref. No. | Part No. | Description | No. Used |
|---|---|---|---|
| 1 | 71-0560 | Spring Arm Ass'y - R.H. | 2 |
| 2 | 56-6270 | Decal - Danger | 1 |
| 3 | 46-6810 | Screw - Hex Washer Hd. Thread Forming | 1 |
| 4 | 62-4060 | Decal - Danger | 1 |
| 5 | 11-6239 | Tunnel - Discharge (Incl. Ref. #4) | 1 |
| 6 | 80-3780 | Bracket - Spring | 1 |
| 7 | 46-6811 | Screw w/Washer | 3 |
| 8 | 46-3520 | Handle - Door | 1 |
| 9 | 46-7060 | Spring - Compression | 1 |
| 10 | 80-3770 | Retainer - Door | 1 |
| 11 | 76-4660 | Spring - Door | 1 |
| 12 | 46-6821 | Cover - Door | 1 |
| 13 | 76-4580 | Rod - Door | 1 |
| 14 | 76-4570 | Plate - Latch | 1 |

| Ref. No. | Part No. | Description | No. Used |
|---|---|---|---|
| 15 | 23-0880 | Bushing | 1 |
| 16 | 46-8090 | Screw - Hex Washer Hd. Self Tapping | 2 |
| 17 | 49-4170 | Cover - Handle | 1 |
| 18 | 46-3511 | Door - Discharge | 1 |
| 19 | 32144-70 | Screw - Hex Washer Hd. Thread Forming | 1 |
| 20 | 2412-93 | R-Clamp | 1 |
| 21 | 44-0580 | Shield - Rear | 1 |
| 22 | 33-3208 | Rod - Shield | 1 |
| 23 | 25-7740 | Knob - Spring Arm | 4 |
| 24 | 71-0570 | Spring Arm Ass'y - L.H. | 2 |
| 25 | 66-0561 | Screw - Pivot | 4 |
| 26 | 11-9509 | Wheel & Tire Assembly (Incl. Ref. #27) | 4 |
| 27 | 27-6250 | Bushing - Wheel | 8 |

©The TORO Company - 1991

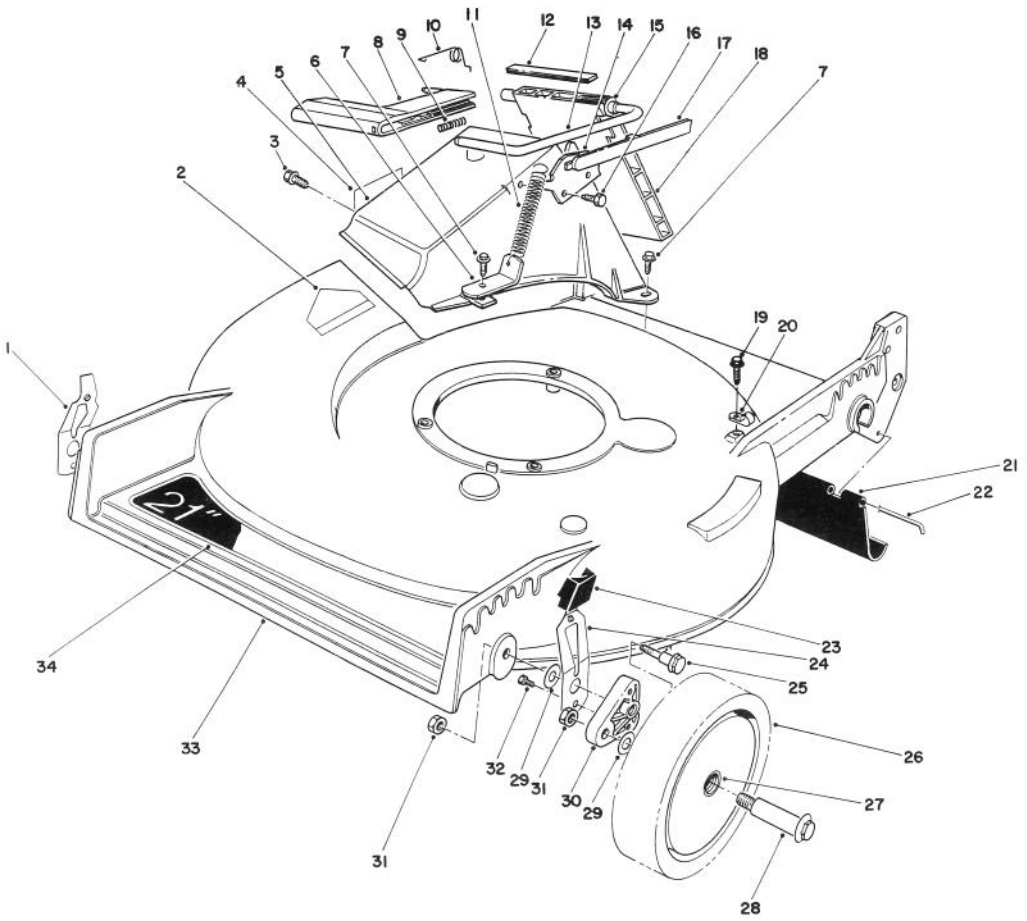


C-0779

# HOUSING ASSEMBLY (CONTINUED)

| Ref. No. | Part No. | Description | No. Used |
|---|---|---|---|
| 28 | 27-6231 | Bolt - Wheel | 4 |
| 29 | 40-1940 | Washer - Wheel | 8 |
| 30 | 66-0580 | Arm - Pivot | 4 |
| 31 | 52-3620 | Nut - Lock | 8 |
| 32 | 32144-85 | Screw - Hex Hd. Cap | 4 |
| 33 | 14-3479 | Housing Assembly (Incl. Ref. #2) | 1 |

| Ref. No. | Part No. | Description | No. Used |
|---|---|---|---|
| 34 | 75-9450 | Decal Deck | 1 |
| * | 77-0200 | Discharge Door Assembly (Incl. Ref. #8, 9, 12, 13, 15, 17, & 18) | 1 |

*Not Illustrated

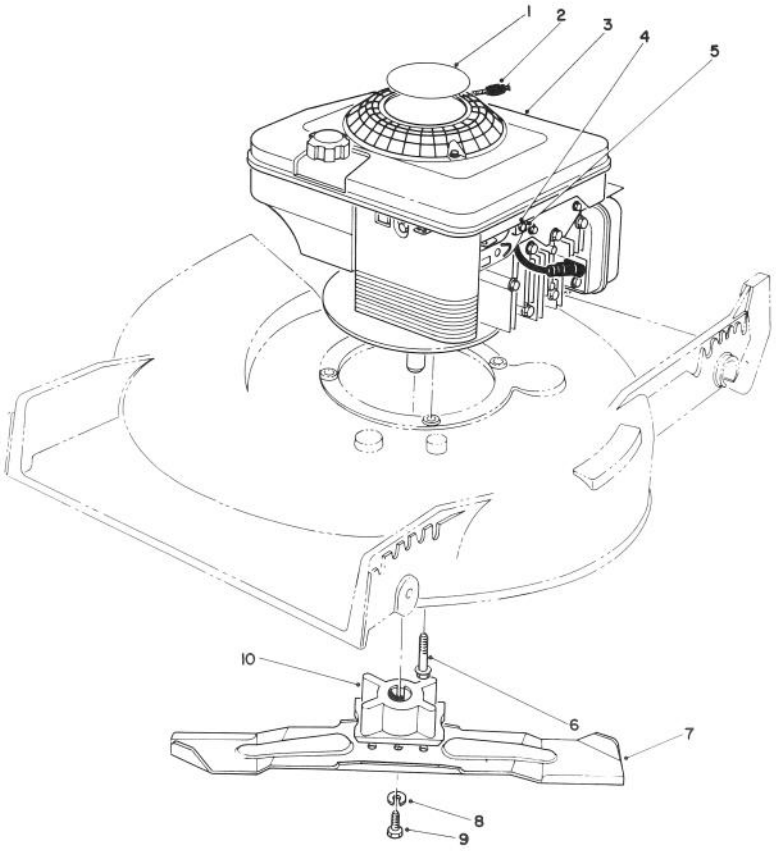


C-0575

# ENGINE ASSEMBLY

| Ref. No. | Part No. | Description | No. Used |
|---|---|---|---|
| 1 | 75-9400 | Decal - Engine | 1 |
| †2 | 2210-316 | Stop - Rope | 1 |
| 3 | | Engine | 1 |
| †4 | 2210-249 | Clamp - Casing | 1 |
| †5 | 2210-313 | Screw - Clamp | 1 |

| Ref. No. | Part No. | Description | No. Used |
|---|---|---|---|
| 6 | 32144-102 | Screw - Thread Forming | 3 |
| 7 | 42-1000 | Blade - 21" | 1 |
| 8 | 3253-22 | Lockwasher | 1 |
| 9 | 26-0670 | Screw - Blade | 1 |
| 10 | 62-7540 | Retainer - Blade | 1 |

†Provided with Engine

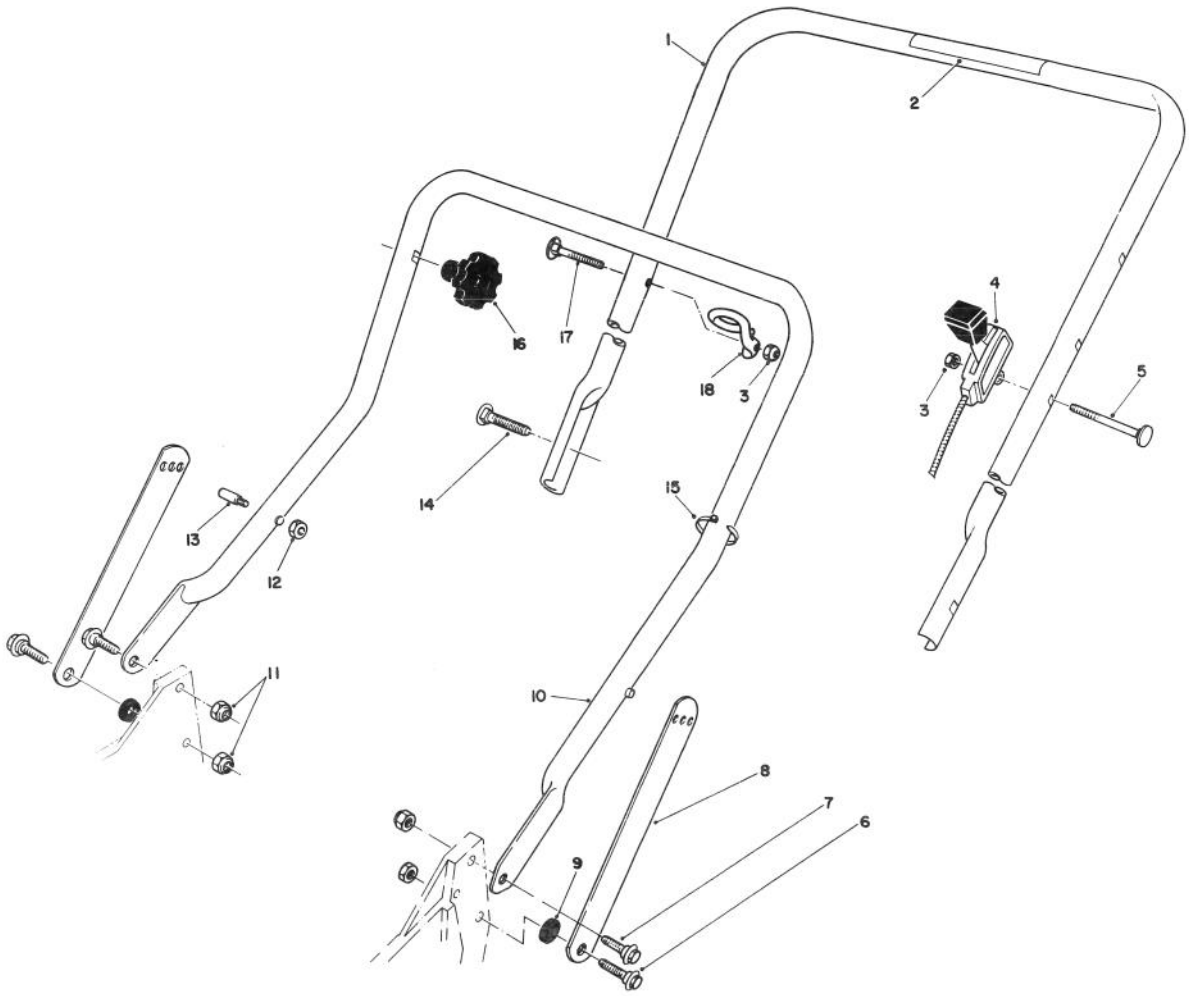


C-0780

# HANDLE ASSEMBLY

| Ref. No. | Part No. | Description | No. Used |
|---|---|---|---|
| 1 | 13-2319 | Handle - Upper (Incl. Ref. #2) | 1 |
| 2 | 63-8540 | Decal - Warning | 1 |
| 3 | 3296-42 | Locknut | 2 |
| 4 | 76-3248 | Control - Throttle (Bend Type #6) (Sheath Lg. 47") (Wire Lg. 2-1/16") | 1 |
| 5 | 46-6430 | Screw - Handle | 1 |
| 6 | 27-7210 | Screw - Shoulder | 2 |
| 7 | 27-7211 | Screw - Shoulder | 2 |
| 8 | 43-1370 | Latch - Handle | 2 |

| Ref. No. | Part No. | Description | No. Used |
|---|---|---|---|
| 9 | 3-3287 | Spacer | 2 |
| 10 | 43-1361 | Lower Handle Assembly | 1 |
| 11 | 3296-29 | Locknut | 4 |
| †12 | 3296-47 | Locknut | 2 |
| †13 | 49-2750 | Pin - Handle | 2 |
| 14 | 17-9421 | Screw - Handle | 2 |
| 15 | 3290-378 | Tie - Cable | 1 |
| 16 | 19-4050 | Knob - Handle Release | 2 |
| 17 | 46-6433 | Screw - Handle | 1 |
| 18 | 46-8080 | Guide - Rope | 1 |

†Service Replacement Parts

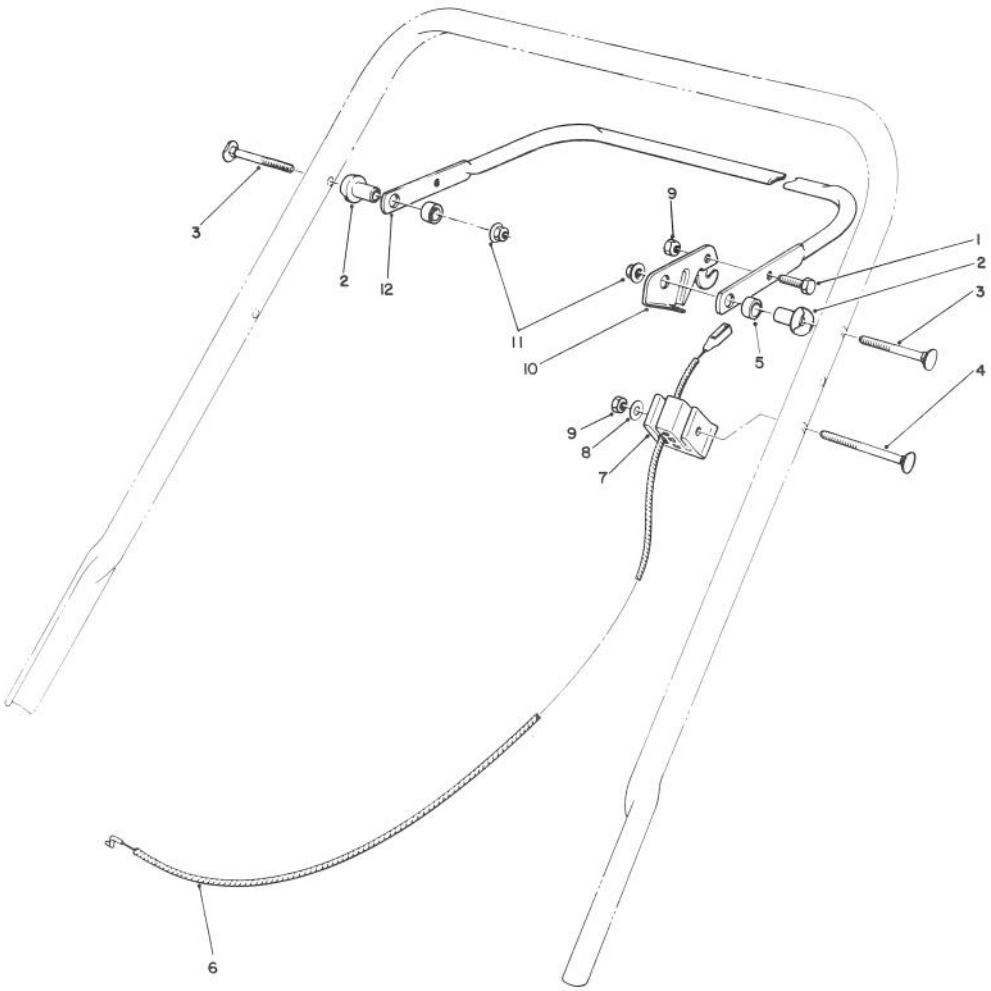


C-0571

# TRACTION CONTROL ASSEMBLY

| Ref. No. | Part No. | Description | No. Used |
|---|---|---|---|
| 1 | 321-3 | Capscrew - Hex Hd. | 1 |
| 2 | 49-1630 | Support - Spacer | 2 |
| 3 | 17-9421 | Screw - Handle | 2 |
| 4 | 46-6434 | Screw - Handle | 1 |
| 5 | 256-276 | Spacer - Nylon | 2 |
| 6 | 76-4331 | Cable - Brake | 1 |

| Ref. No. | Part No. | Description | No. Used |
|---|---|---|---|
| 7 | 46-6980 | Support - Cable | 1 |
| 8 | 3256-22 | Washer - Flat | 1 |
| 9 | 3296-42 | Locknut | 2 |
| 10 | 66-5350 | Lever - Control | 1 |
| 11 | 3296-58 | Locknut | 2 |
| 12 | 71-3080 | Bar - Control | 1 |

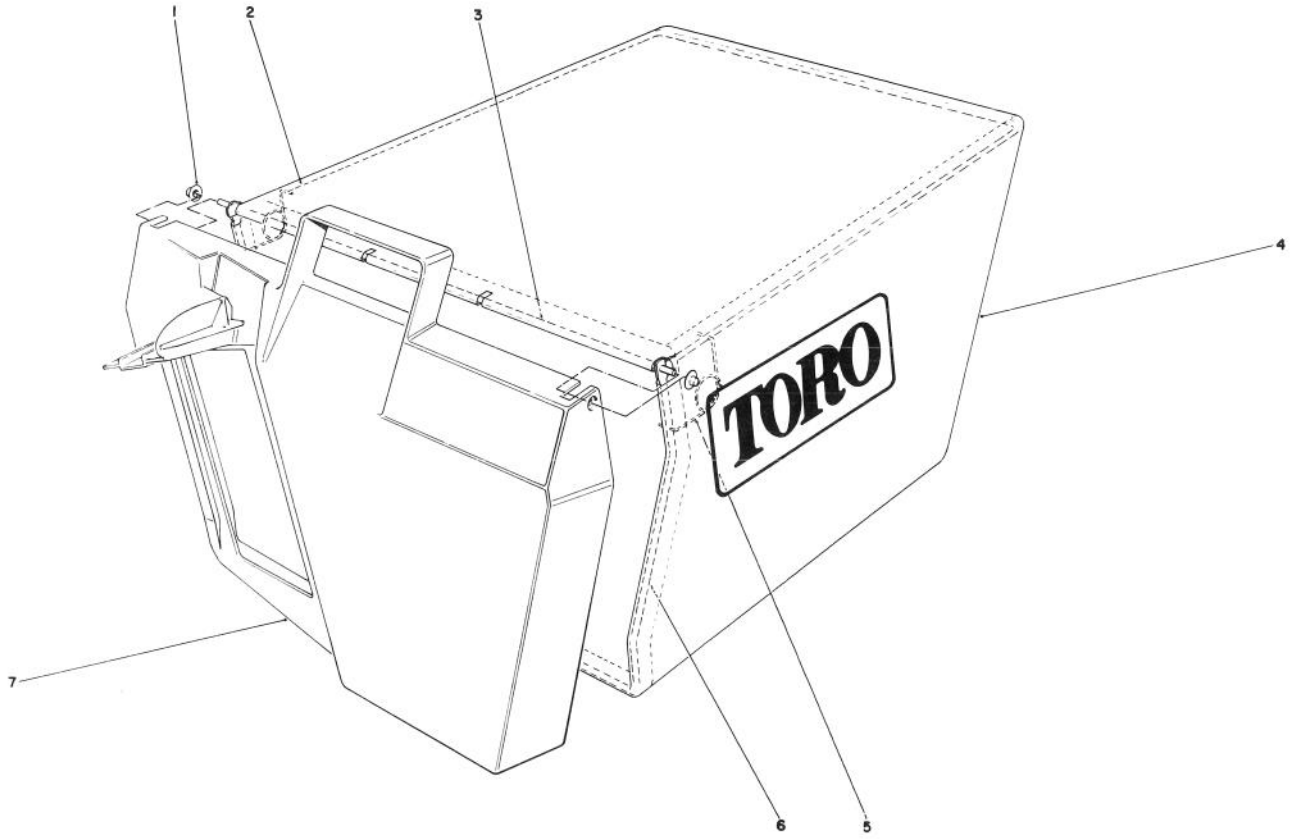


C-0301

# GRASS BAG ASSEMBLY NO. 11-0159

| Ref. No. | Part No. | Description | No. Used |
|---|---|---|---|
| 1 | 3290-422 | Nut - Push | 2 |
| 2 | 42-4030 | Bag Frame - Upper | 1 |
| 3 | 33-4820 | Hinge - Bag Door | 1 |
| 4 | 44-0522 | Bag - Grass | 1 |

| Ref. No. | Part No. | Description | No. Used |
|---|---|---|---|
| 5 | 36-6910 | Spring | 2 |
| 6 | 43-0030 | Frame - Bag | 1 |
| 7 | 36-1332 | Door - Grass Bag | 1 |

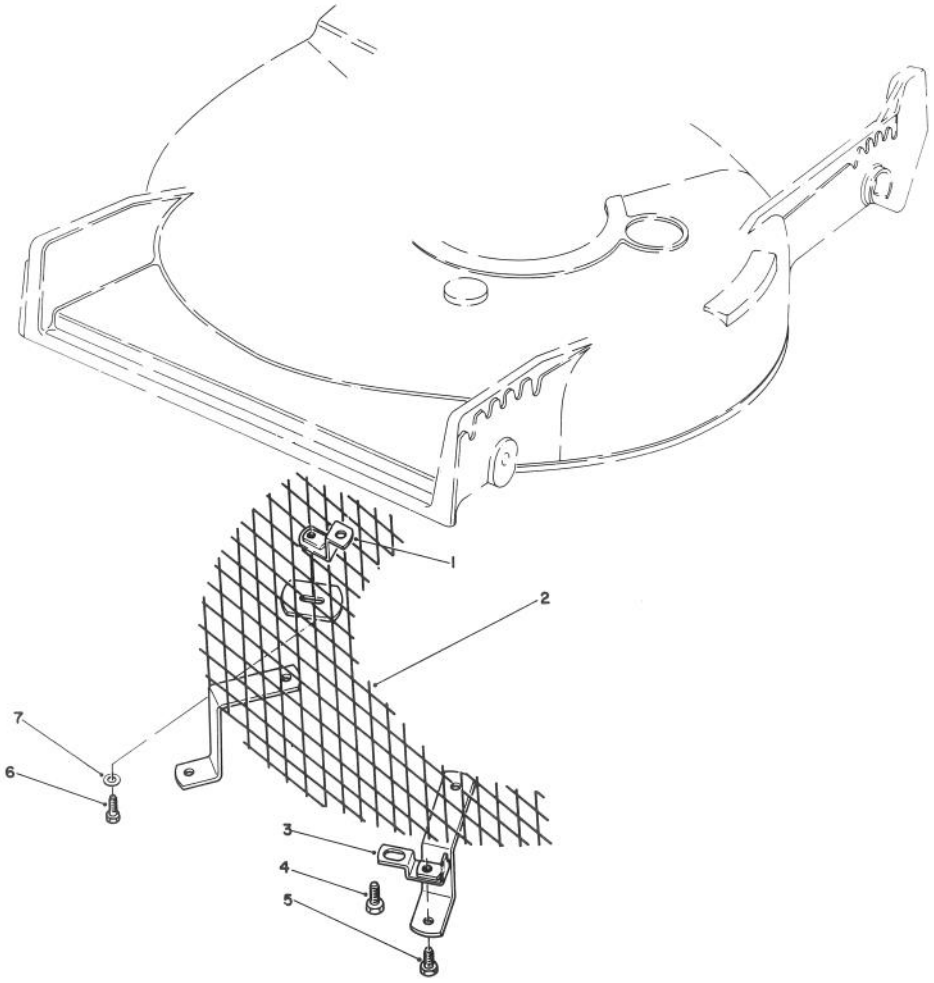


C-0302

# LEAF SHREDDER KIT MODEL NO. 59157

| Ref. No. | Part No. | Description | No. Used |
|---|---|---|---|
| 1 | 47-6260 | Bracket | 1 |
| 2 | 47-6230 | Screen | 1 |
| 3 | 46-4880 | Bracket - Mounting | 2 |
| 4 | 32144-11 | Screw - Self Tapping | 3 |

| Ref. No. | Part No. | Description | No. Used |
|---|---|---|---|
| 5 | 321-3 | Capscrew - Hex Hd. | 2 |
| 6 | 321-5 | Capscrew - Hex Hd. | 1 |
| 7 | 3256-1 | Washer | 1 |

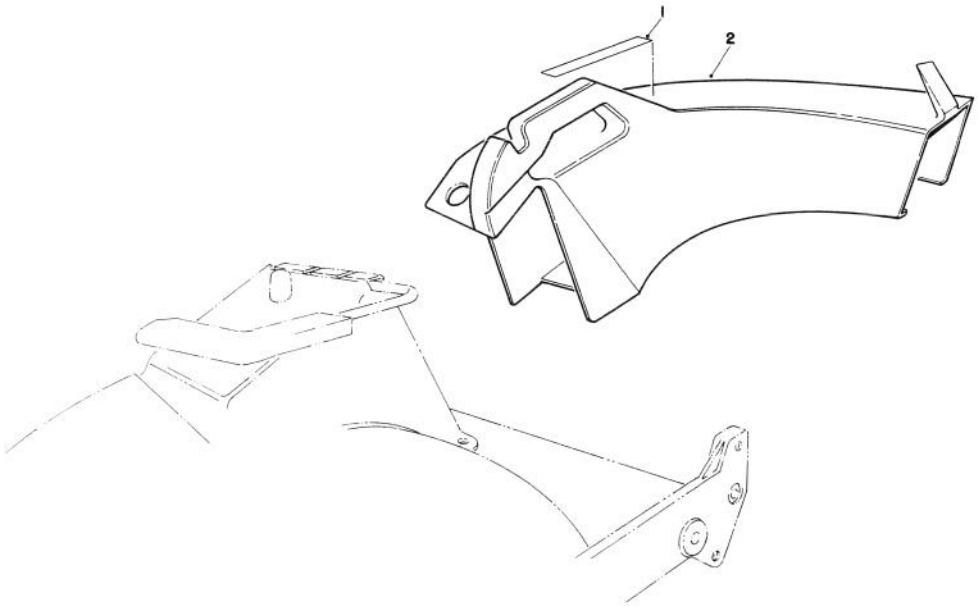


T-0716-90

# SIDE DISCHARGE CHUTE MODEL NO 59168 (OPTIONAL)

| Ref. No. | Part No. | Description | No. Used |
|---|---|---|---|
| 1 | 76-4780 | Decal - Caution | 1 |
| 2 | 13-2239 | Chute - Discharge (Incl. Ref. #1) | 1 |

| Ref. No. | Part No. | Description | No. Used |
|---|---|---|---|

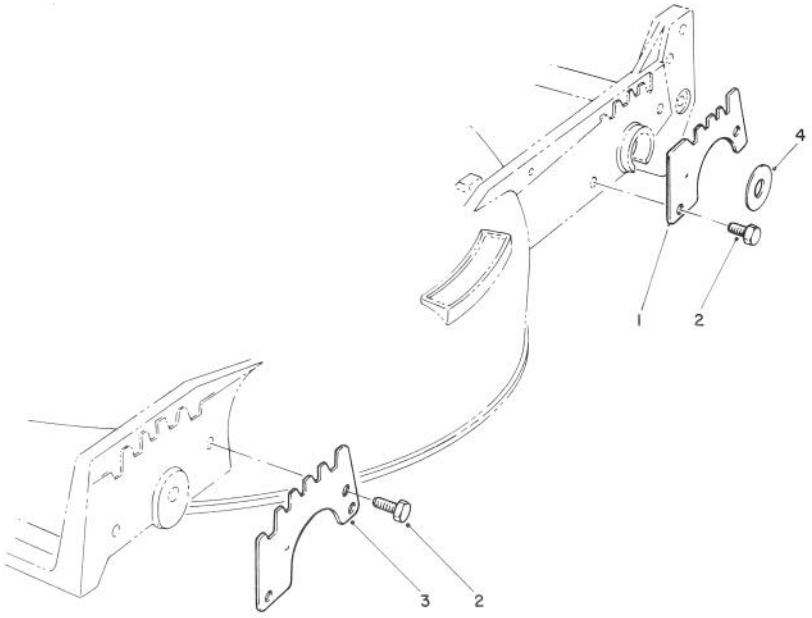


C-0304

# WEAR PLATE MODEL NO. 49-4080 (OPTIONAL)

| Ref. No. | Part No. | Description | No. Used |
|---|---|---|---|
| 1 | 49-4070 | Plate - Rear Wear | 2 |
| 2 | 32104-17 | Thread Forming Screw | 8 |

| Ref. No. | Part No. | Description | No. Used |
|---|---|---|---|
| 3 | 43-5050 | Plate - Wear Front | 2 |
| 4 | 33-0390 | Washer | 2 |

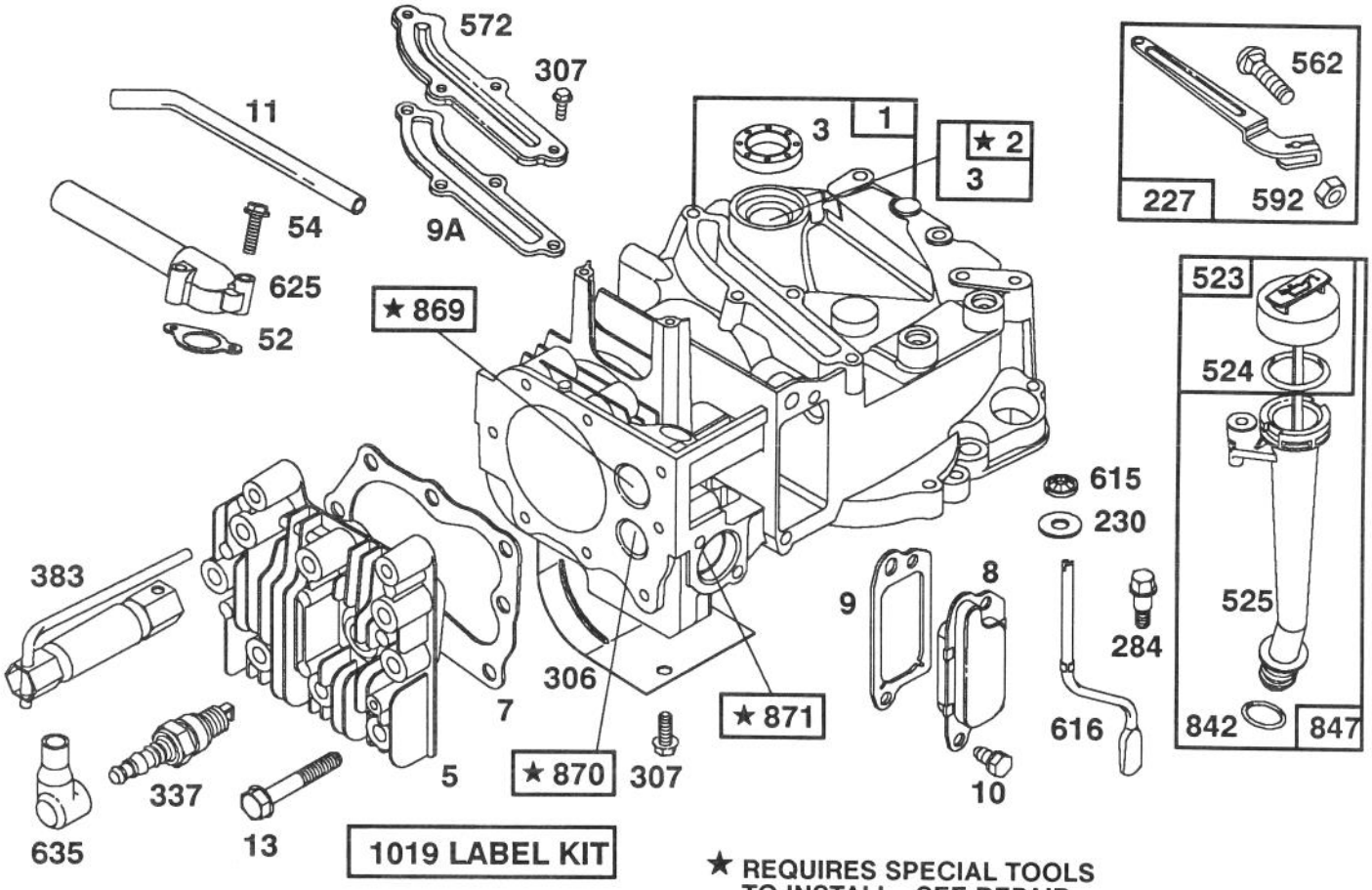


Assemblies include all parts shown in frames.

★ REQUIRES SPECIAL TOOLS TO INSTALL. SEE REPAIR INSTRUCTION MANUAL.

# ENGINE BRIGGS & STRATTON MODEL 124702-3115-01

| Ref. No. | Part No. | Description | No. Used |
|---|---|---|---|
| 1 | 493260 | Cylinder Assembly | 2 |
| 2 | 293708 | Bushing-Cylinder | 1 |
| | | Note: Requires Special Tools for Installation. | |
| ★3 | 393862 | Seal-Oil | 1 |
| 5 | 213861 | Head-Cylinder | 1 |
| ★7 | 272200 | Gasket-Cylinder Hd. | 1 |
| 8 | 399717 | Breather-Valve Chamber | 1 |
| ★9 | 271904 | Gasket-Valve Cover | 1 |
| ★9A | 272238 | Gasket-Baffle Plate | 1 |
| 10 | 94222 | Mounting Sem | 1 |
| 11 | 231685 | Tube-Breather | 1 |
| 13 | 94547 | Screw-Cylinder Hd. | 1 |
| ★52 | 272199 | Gasket-Intake Elbow | 1 |
| 54 | 94526 | Screw-Intake Elbow Mounting | 1 |
| 227 | 492349 | Lever Assembly-Gov. | 1 |
| 230 | 67072 | Washer-Governor Crank | 1 |
| 284 | 94511 | Screw-Hex. Head | 1 |
| 306 | 224324 | Shield-Cylinder | 1 |
| 307 | 94515 | Screw-Hex. Head | 1 |
| 337 | 802592 | Plug-Spark | 1 |
| 383 | 89838 | Wrench-Spark Plug | 1 |

| Ref. No. | Part No. | Description | No. Used |
|---|---|---|---|
| 523 | 493950 | Cap with Dipstick-Oil Filler | 1 |
| 524 | 280393 | Seal-Filler Tube | 1 |
| 525 | 493952 | Tube-Oil Filler | 1 |
| 562 | 92613 | Bolt-Governor Lever | 1 |
| 572 | 224328 | Baffle-Cylinder | 11 |
| 592 | 231082 | Nut-Hex. | |
| 615 | 94474 | Pushnut (Governor Crank) | 1 |
| 616 | 262578 | Crank-Governor | 1 |
| 625 | 492717 | Tube-Fuel Intake | 1 |
| 635 | 66538 | Elbow-Spark Plug | 1 |
| 842 | 280966 | Seal-O-Ring | 1 |
| 847 | 493459 | Oil Fill Tube and Dipstick Assy. | 1 |
| 869 | 213512 | Seat-Intake Valve | 1 |
| 870 | 213513 | Seat-Exhaust Valve | 1 |
| 871 | 262001 | Guide-Exhaust Valve | 1 |
| | | Note: 63709 Guide-Intake Valve See Repair Instruction Manual. | 1 |
| 1019 | 494256 | Label Kit | 1 |

★ Included in Gasket Set- Part No. 493263.

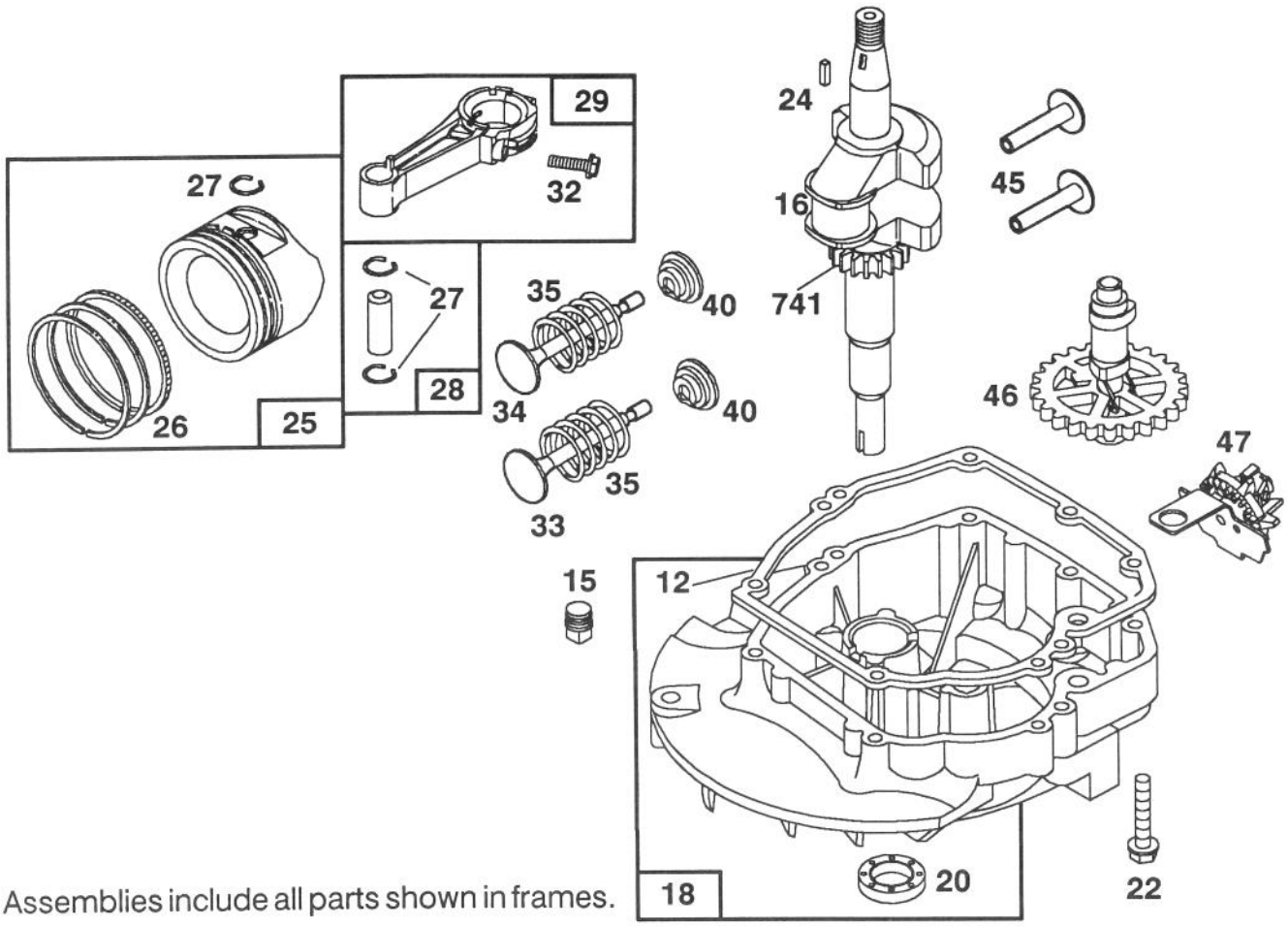


Assemblies include all parts shown in frames.

# ENGINE BRIGGS & STRATTON MODEL 124702-3115-01

| Ref. No. | Part No. | Description | No. Used |
|---|---|---|---|
| *12 | 272198 | Gasket-Crankcase | 1 |
| 15 | 94613 | Plug-Oil Drain | 1 |
| 16 | 493731 | Crankshaft | 1 |
| | | Note: Order 94388 For Timing Gear Key | |
| 18 | 493279 | Sump-Engine | 1 |
| *20 | 399781 | Seal-Oil | 1 |
| 22 | 94220 | Screw-Sump Mtg. Sem | 1 |
| | | Note: 94612 Screw-Hex. Washer Head (One (1) Used in Hole Nearest Breather) | |
| 24 | 222698 | Key-Flywheel | 1 |
| 25 | 493262 | Piston Assy.-Standard | 1 |
| | 493385 | Piston Assy.-.010" O.S. | 1 |
| | 493386 | Piston Assy.-.020" O.S. | 1 |
| | 493387 | Piston Assy.-.030" O.S. | 1 |
| | | PISTON RING SETS: | 1 |
| | | Note: For Chrome Piston Ring Set- Standard Size-Order Part No. 493391. | |
| 26 | 493261 | Ring Set-Std. Piston | 1 |
| | 493388 | Ring Set-.010" O.S. Piston | 1 |
| | 493389 | Ring Set-.020" O.S. Piston | 1 |
| | 493390 | Ring Set-.030" O.S. Piston | 1 |
| 27 | 26026 | Lock-Piston Pin | 1 |
| 28 | 298909 | Pin Assembly-Piston-Standard | 1 |
| | 298908 | Pin Assembly-Piston-.005" O.S. | 1 |
| 29 | 490566 | Rod Assembly- Connecting | 1 |
| | | Note: For Connecting Rod with .020" Undersize Crankpin Bearing- Order No. 490743. | 1 |
| 32 | 94405 | Screw-Connecting Rod | 1 |
| 33 | 262651 | Valve-Exhaust | 1 |
| 34 | 262652 | Valve-Intake | 1 |
| 35 | 262224 | Spring-Valve | 1 |
| 40 | 93312 | Retainer-Valve Spring | 1 |
| 45 | 262204 | Tappet-Valve | 1 |
| 46 | 492830 | Gear-Cam | 1 |
| 47 | 493737 | Oil Slinger Gear and Bracket | 1 |
| 741 | 262598 | Gear-Timing | 1 |

* Included in Gasket Set- Part No. 493263.

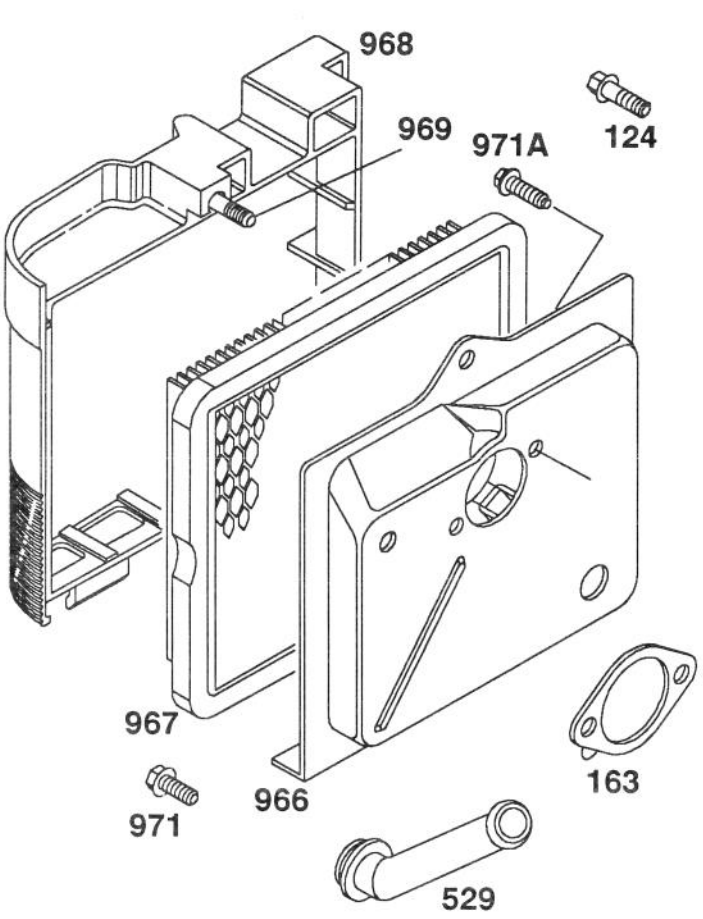


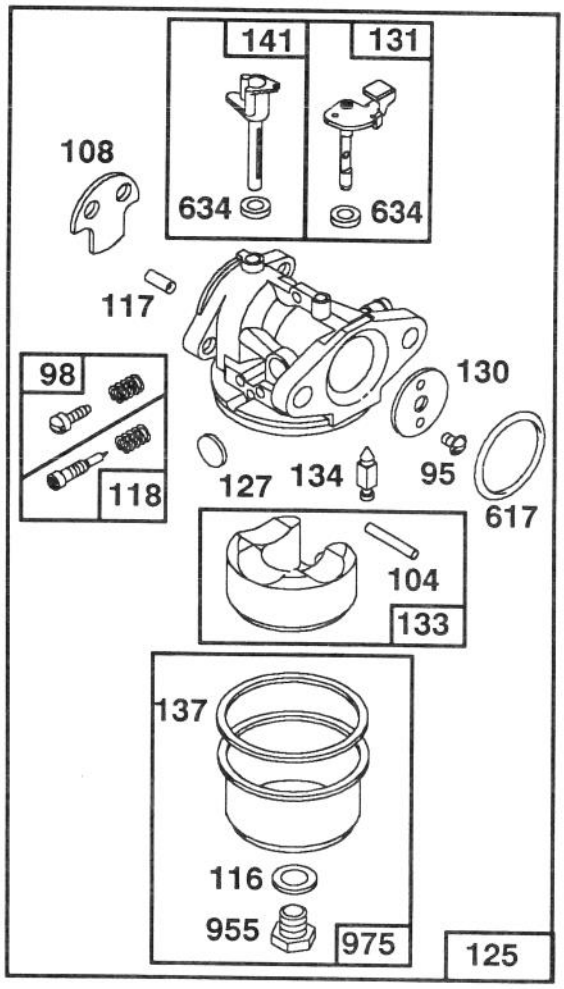


Assemblies include all parts shown in frames.

# ENGINE BRIGGS & STRATTON MODEL 124702-3115-01

| Ref. No. | Part No. | Description | No. Used |
|---|---|---|---|
| 95 | 94098 | Screw-Throttle Valve Mounting Sem | 1 |
| 98 | 398185 | Screw-Idle Adjustment | 1 |
| ●104 | 231371 | Pin-Float Hinge | 1 |
| 108 | 223471 | Valve-Choke | 1 |
| ●◆116 | | Gasket-Sealing (Sold in Kit Only). | 1 |
| ●117 | | Jet (Sold in Kit Only). | 1 |
| 118 | 493765 | Valve and Spring- Needle | 1 |
| 124 | 94525 | Screw-Carburetor Mtg. | 1 |
| 125 | 494217 | Carburetor Assembly | 1 |
| ●127 | | Plug-Welch (Sold in Kit Only). | 1 |
| 130 | 223470 | Valve-Throttle | 1 |
| 131 | 493267 | Shaft and Lever- Throttle | 1 |
| 133 | 398187 | Float Assy.-Carburetor | 1 |
| ●134 | 398188 | Valve-Inlet (Includes Seat) | 1 |

| Ref. No. | Part No. | Description | No. Used |
|---|---|---|---|
| ●◆137 | | Gasket-Bowl (Sold in Kit Only). | 1 |
| 141 | 494218 | Shaft-Choke | 1 |
| ★163 | 272296 | Gasket-Air Cleaner | 1 |
| 529 | 280943 | Grommet-Breather | 1 |
| ●◆617 | 270344 | Seal-Fuel Intake Tube | 1 |
| ●◆634 | | Washer-Shaft (Sold in Kit Only) | 1 |
| 955 | 493869 | Screw-Bowl Mtg. | 1 |
| 966 | 492363 | Base-Air Cleaner | 1 |
| 967 | 491588 | Filter-Air | 1 |
| 968 | 280937 | Cover-Air Cleaner | 1 |
| 969 | 94120 | Screw-Cover Mtg. | 1 |
| 971 | 94269 | Screw-Air Cleaner | 1 |
| 971A | 94121 | Screw-Base to Carburetor | 1 |
| 975 | 493640 | Bowl Assy. | 1 |

● Included in Carburetor Overhaul Kit- Part No. 493762.
◆ Included in Carburetor Gasket Set- Part No. 490937.
★ Included on Gasket Set- Part No. 493263.

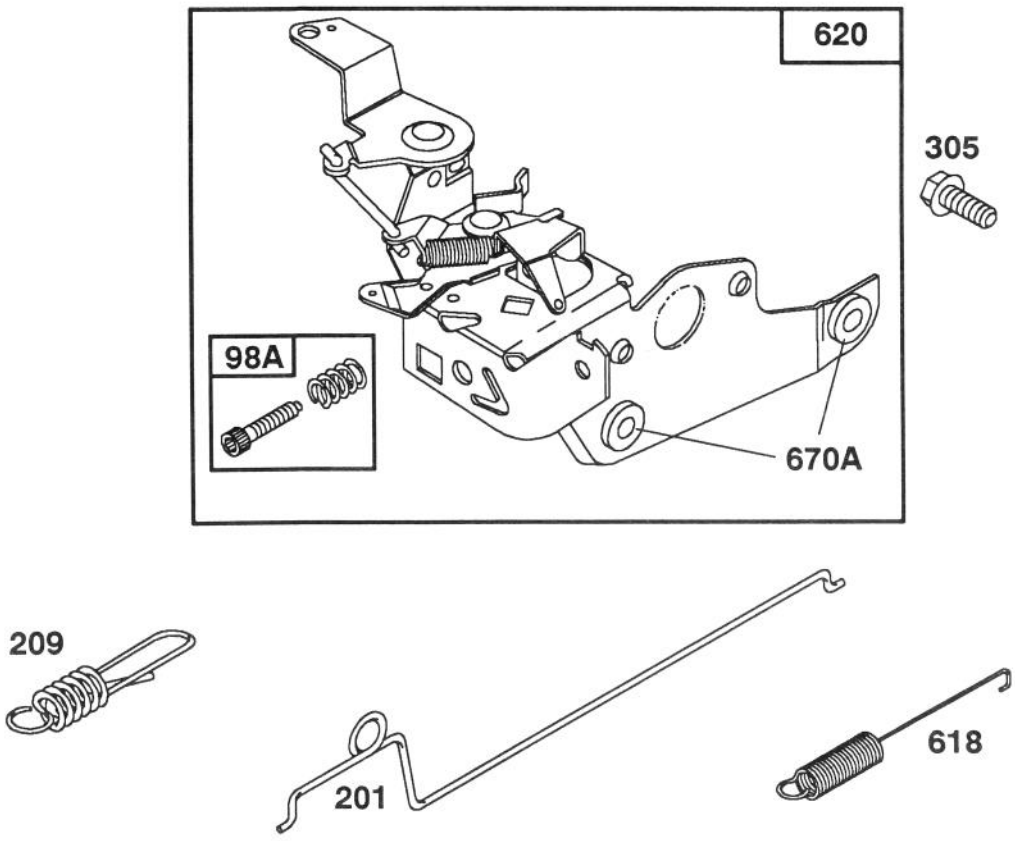


Assemblies include all parts shown in frames.

# ENGINE BRIGGS & STRATTON MODEL 124702-3115-01

| Ref. No. | Part No. | Description | No. Used |
|---|---|---|---|
| 98A | 493280 | Screw Assy.- Speed Adj. | 1 |
| 201 | 262579 | Link-Governor | 1 |
| 209 | 262661 | Spring-Governor | 1 |
| 305 | 94513 | Screw-Hex. Head Sem | 1 |

| Ref. No. | Part No. | Description | No. Used |
|---|---|---|---|
| 618 | 262749 | Spring-Choke Return | 1 |
| 620 | 493894 | Bracket Assembly- Carburetor Control | 1 |
| 670A | 493823 | Spacer-Carburetor Bracket | 1 |

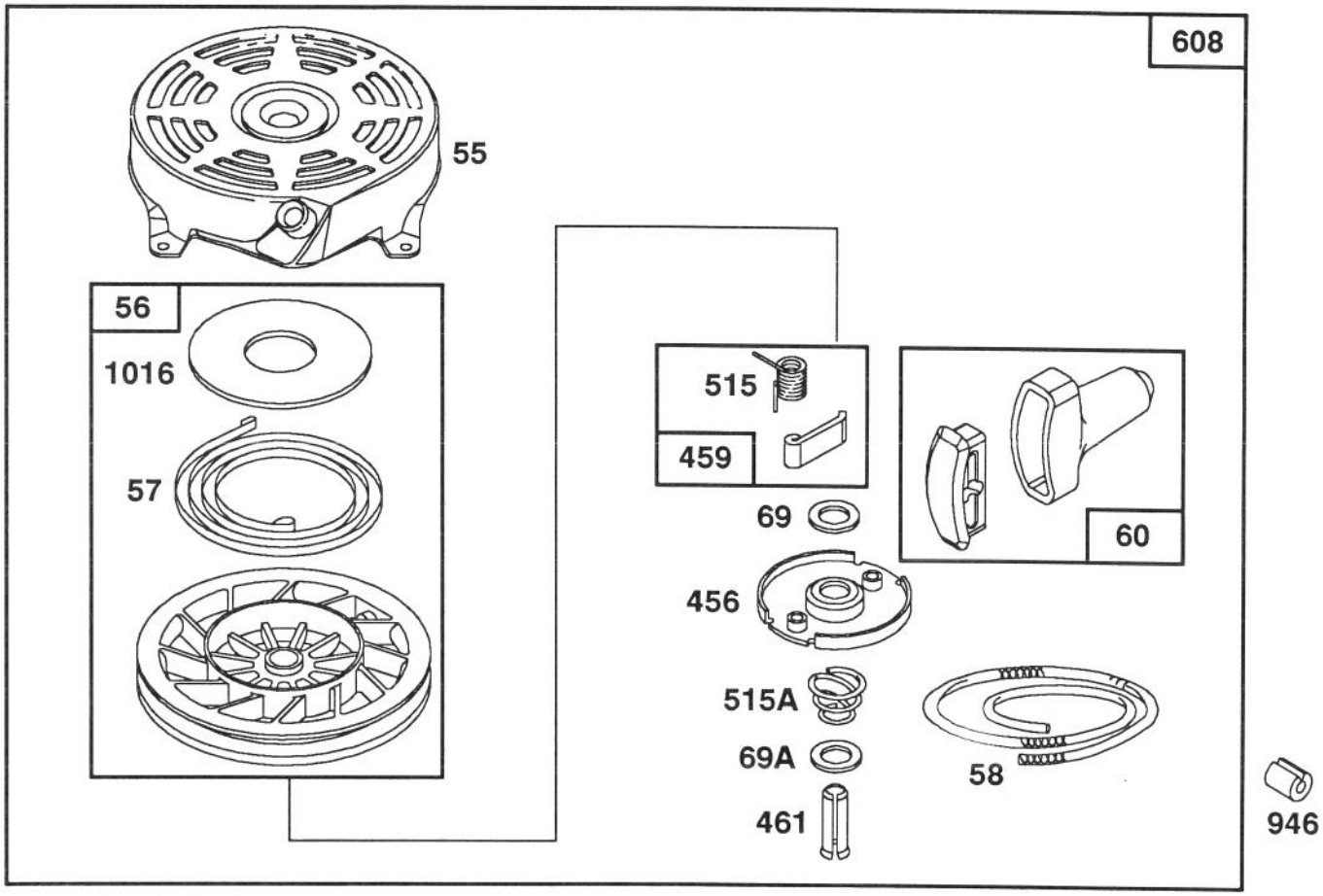


Assemblies include all parts shown in frames.

# ENGINE BRIGGS & STRATTON MODEL 124702-3115-01

| Ref. No. | Part No. | Description | No. Used |
|---|---|---|---|
| 55 | 492831 | Housing-Rewind Starter | 1 |
| 56 | 492832 | Pulley-Rewind Starter | 1 |
| 57 | 262594 | Spring-Rewind Starter | 1 |
| 58 | 280399 | Rope-Rewind Starter | 1 |
| 60 | 393152 | Handle-Rewind Starter | 1 |
| 69 | 280973 | Washer-Rewind Starter | 1 |
| 69A | 224322 | Washer-Rewind Starter | 1 |
| 456 | 224321 | Retainer-Rewind Starter | 1 |

| Ref. No. | Part No. | Description | No. Used |
|---|---|---|---|
| 459 | 492833 | Pawl-Starter | 1 |
| 461 | 262626 | Pin-Starter | 1 |
| 515 | 262556 | Spring-Pawl | 1 |
| 515A | 262625 | Spring-Torsion | 1 |
| 608 | 493295 | Starter Assy.-Rewind | 1 |
| 946 | 223294 | Stop Rope | 1 |
| 1016 | 224278 | Cover-Rewind Starter | 1 |

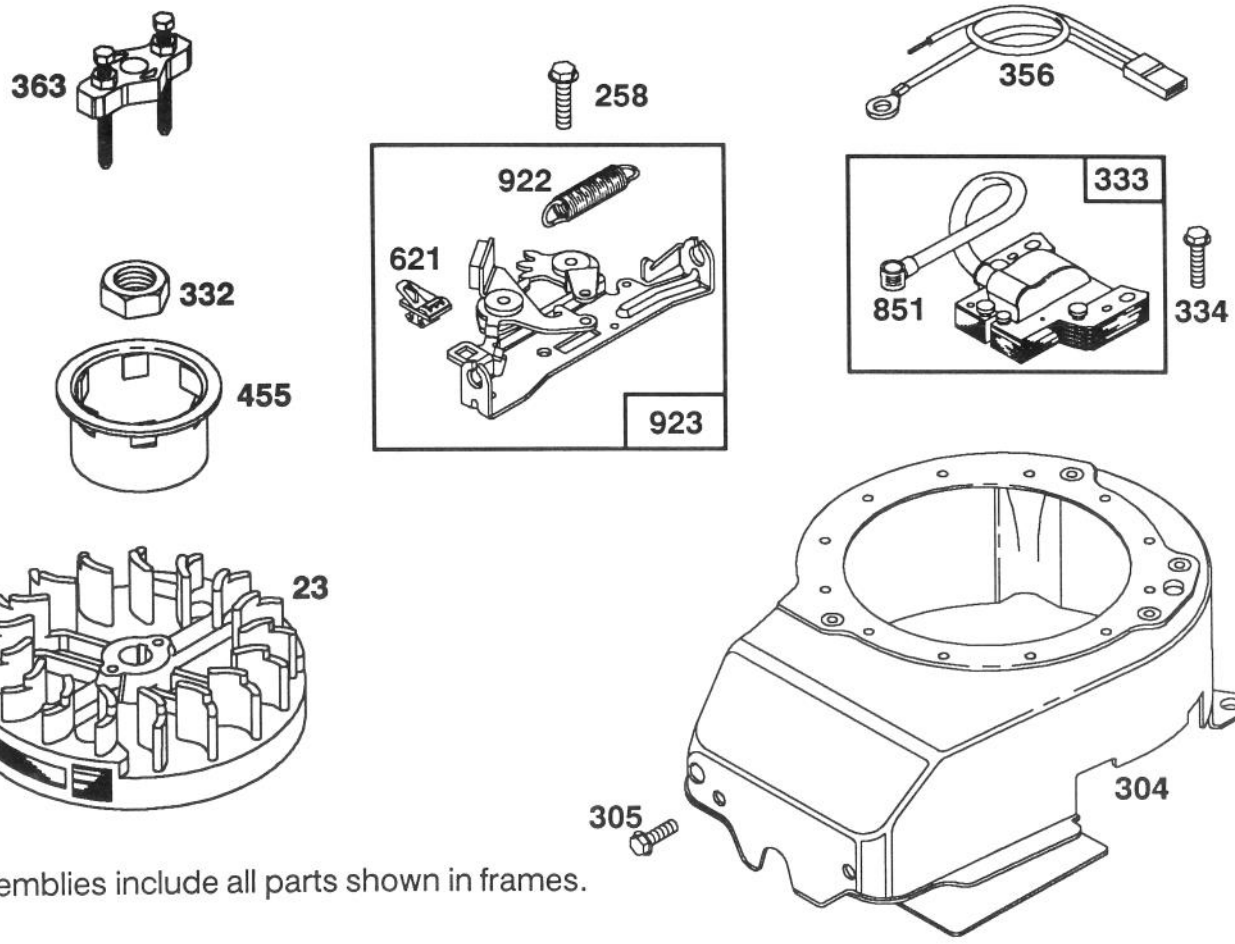


Assemblies include all parts shown in frames.

# ENGINE BRIGGS & STRATTON MODEL 124702-3115-01

| Ref. No. | Part No. | Description | No. Used |
|---|---|---|---|
| 23 | 492177 | Flywheel-Magneto | 1 |
| 258 | 94512 | Screw-Hex. Head | 1 |
| 304 | 493293 | Housing- Blower | 1 |
| 305 | 94513 | Screw-Hex. Head Sem | 1 |
| 332 | 92284 | Nut-Flywheel | 1 |
| 333 | 802574 | Armature-Magneto | 1 |
| 334 | 93381 | Screw-Armature Mounting Sem | 1 |

| Ref. No. | Part No. | Description | No. Used |
|---|---|---|---|
| 356 | 398808 | Wire-Ground | 1 |
| 363 | 19069 | Puller-Flywheel (Optional Accessory) | 1 |
| 455 | 224250 | Cup-Starter | 1 |
| 621 | 396847 | Switch-Stop | 1 |
| 851 | 221798 | Terminal-Ignition Cable | 1 |
| 922 | 262640 | Spring-Brake | 1 |
| 923 | 492918 | Brake Assy. | 1 |

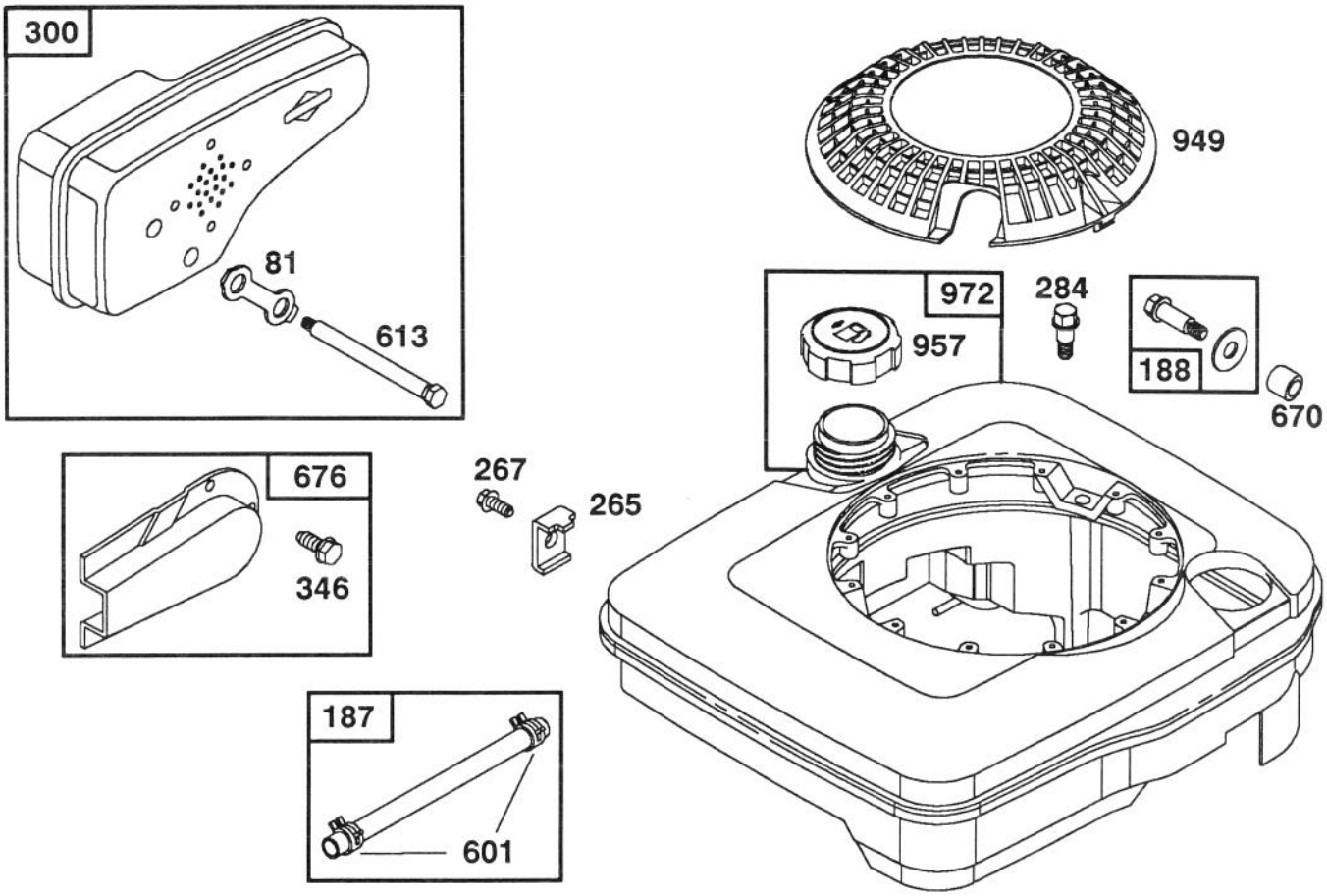


Assemblies include all parts shown in frames.

# ENGINE BRIGGS & STRATTON MODEL 124702-3115-01

| Ref. No. | Part No. | Description | No. Used |
|---|---|---|---|
| 81 | 223664 | Lock-Muffler Screw | 1 |
| 187 | 492790 | Hose-Fuel | 1 |
| 188 | 398540 | Screw-Tank Mounting (Includes Washer) | 1 |
| 265 | 221535 | Clamp-Casing | 1 |
| 267 | 94204 | Screw-Clamp Mtg. | 1 |
| 284 | 94511 | Screw-Hex. Head | 1 |
| 300 | 490547 | Muffler-Exhaust | 1 |

| Ref. No. | Part No. | Description | No. Used |
|---|---|---|---|
| 346 | 93705 | Screw-Hex. Head | 1 |
| 601 | 93807 | Clamp-Hose | 1 |
| 613 | 94231 | Screw-Muffler Mtg. | 1 |
| 670 | 280512 | Spacer-Fuel Tank | 1 |
| 676 | 493871 | Deflector-Muffler | 1 |
| 949 | 281136 | Screen-Static | 1 |
| 957 | 397974 | Cap Assy.-Fuel | 1 |
| 972 | 494358 | Tank Assembly-Fuel | 1 |

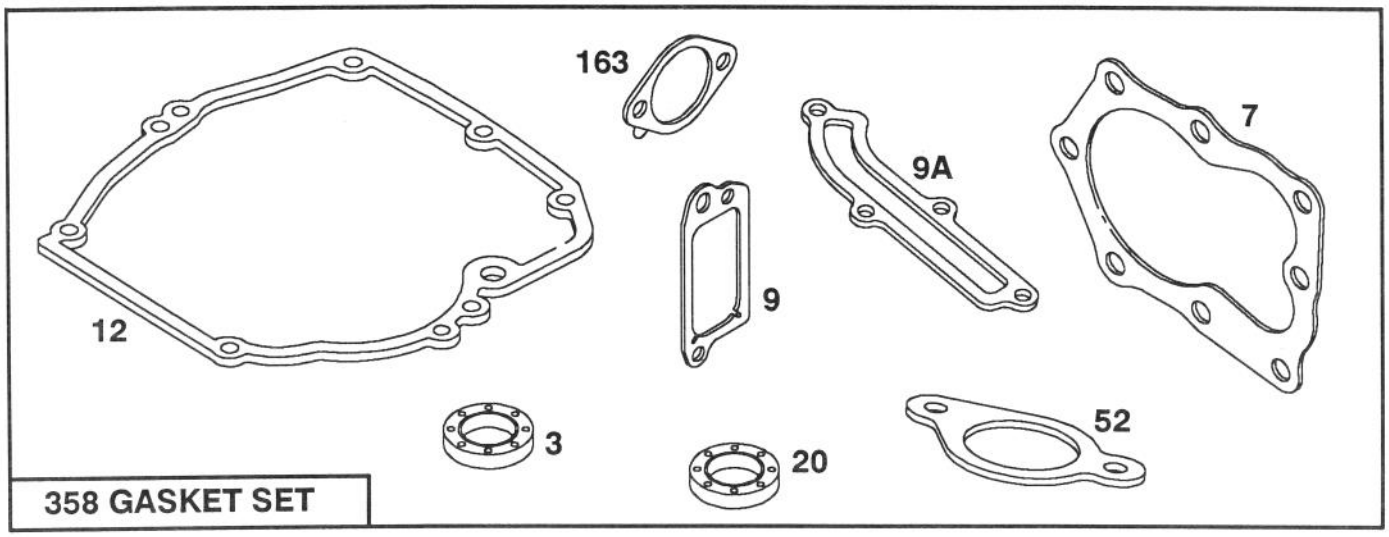


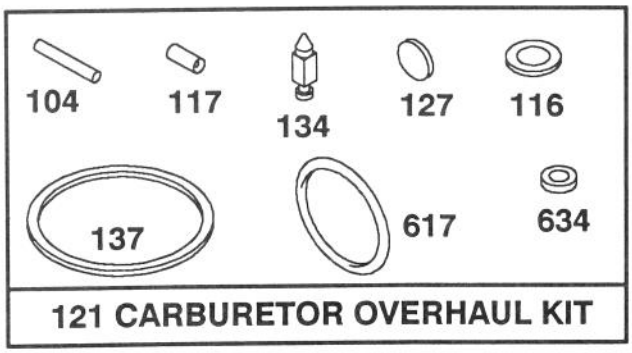


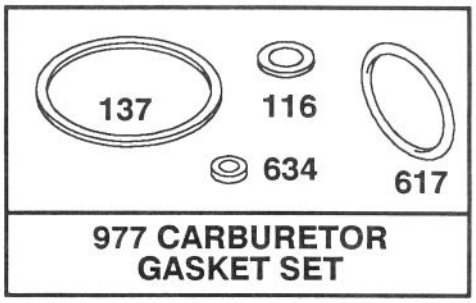


Assemblies include all parts shown in frames.

# ENGINE BRIGGS & STRATTON MODEL 124702-3115-01

| Ref. No. | Part No. | Description | No. Used |
|---|---|---|---|
| ★3 | 393862 | Seal-Oil | 1 |
| ★7 | 272200 | Gasket-Cylinder Hd. | 1 |
| ★9 | 271904 | Gasket-Valve Cover | 1 |
| ★9A | 272238 | Gasket-Baffle Plate | 1 |
| ★12 | 272198 | Gasket-Crankcase | 1 |
| ★20 | 399781 | Seal-Oil | 1 |
| ★52 | 272199 | Gasket-Intake Elbow | 1 |
| ●104 | 231371 | Pin-Float Hinge | 1 |
| ●◆116 | | Gasket-Sealing (Sold in Kit Only). | 1 |
| ●117 | | Jet (Sold in Kit Only). | 1 |
| 121 | 493762 | Carburetor Overhaul Kit | 1 |

| Ref. No. | Part No. | Description | No. Used |
|---|---|---|---|
| ●127 | | Plug-Welch (Sold in Kit Only). | 1 |
| ●134 | 398188 | Valve-Inlet (Includes Seat) | 1 |
| ●◆137 | | Gasket-Bowl ( Sold in Kit Only). | 1 |
| ★163 | 272296 | Gasket-Air Cleaner | 1 |
| 358 | 493263 | Gasket Set | 1 |
| ●◆617 | 270344 | Seal-Fuel Intake Tube | |
| ●◆634 | | Washer-Shaft (Sold in Kit Only) | 1 |
| 977 | 490937 | Gasket Set-Carburetor | 1 |

● Included in Carburator Overhaul Kit- Part No. 493762.
◆ Included in Carburetor Gasket Set- Part No. 490937.
★ Included in Gasket Set- Part No. 493263.

## PRODUCT CHANGES

In an effort to make improvements available to TORO owners as quickly as possible, minor changes are incorporated into Toro's products from time to time that do not become immediately shown in the Parts Catalog. If such a change has been made in your unit, which is not reflected in your manual, see your TORO Distributor or his Authorized TORO Service Dealer for information and part numbers.

## COUNTRIES OTHER THAN THE UNITED STATES OR CANADA

Customers who have purchased TORO products exported from the United States or Canada should contact their Toro Distributor (Dealer) to obtain guarantee policies for your country, province or state. If for any reason you are dissatisfied with your Distributor's service or have difficulty obtaining guarantee information, contact the TORO importer. If all other remedies fail, you may contact us at The Toro Company.

# MAINTENANCE RECORD

| Date | | | | | | | | |
|---|---|---|---|---|---|---|---|---|
| | | | | | | | | |
| | | | | | | | | |
| | | | | | | | | |
| | | | | | | | | |
| | | | | | | | | |
| | | | | | | | | |
| | | | | | | | | |
| | | | | | | | | |
| | | | | | | | | |
| | | | | | | | | |
| | | | | | | | | |
| | | | | | | | | |
| | | | | | | | | |
| | | | | | | | | |
| | | | | | | | | |
| | | | | | | | | |
| | | | | | | | | |
| | | | | | | | | |
| | | | | | | | | |
| | | | | | | | | |
| | | | | | | | | |

Compliance with Radio Interference Regulations Certified.
Certifie Conforme au Reglement sur le Brouillage Radioelectrique.

Litho in U.S.A.

# MAINTENANCE RECORD

| Date | | | | | | | | |
|---|---|---|---|---|---|---|---|---|
| | | | | | | | | |
| | | | | | | | | |
| | | | | | | | | |

# MAINTENANCE RECORD

| Date | | | | | | | | |
|---|---|---|---|---|---|---|---|---|
| | | | | | | | | |
| | | | | | | | | |
| | | | | | | | | |