Form No. 3351–917 Rev A

Air Conditioning Kit
Groundsmaster® 580D
Model No. 30615

Installation Instructions

1. Park the machine on a level surface, lower the cutting units, stop the engine and engage the parking brake.

2. Open the hood and engage the hood prop rod. Remove the side panels to expose the engine compartment.

3. Disconnect the negative (–) battery cable from the batteries.

4. Disconnect the wires from the back of the alternator (Fig. 1).

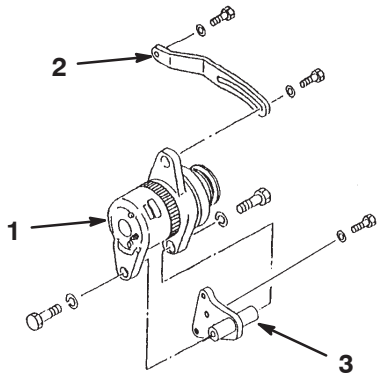

Figure 1

1. Alternator
2. Adjusting arm
3. Mounting bracket

5. Remove the bolts and washers securing the alternator to the adjusting arm and to the mounting bracket (Fig. 1). Retain the fasteners for installation of the new components.

6. Remove and discard the belt from the alternator.

7. Remove and retain the alternator.

8. Remove the bolts and washers securing the alternator adjusting arm and the mounting bracket to the engine (Fig. 1).

9. Remove the fasteners securing the fan belt idler pulley bracket to the fan support and to the engine. Remove and discard the bracket and the fasteners (Fig. 2).

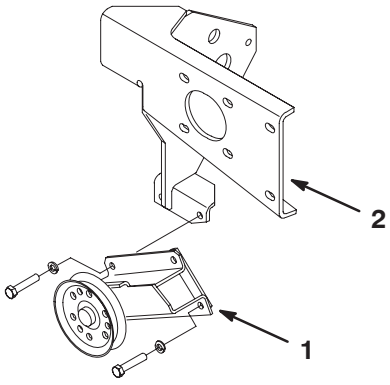

Figure 2

1. Idler bracket
2. Fan support

10. To allow the removal of the belts, remove the fasteners securing the drive shaft to the fan drive pulley (Fig. 3).

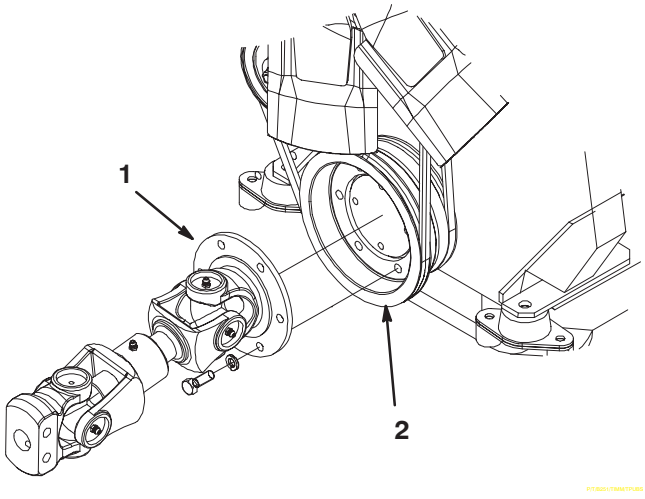

Figure 3

1. Drive shaft
2. Fan drive pulley

11. Remove and discard the fan belt.

© 2004 by The Toro Company
8111 Lyndale Avenue South
Bloomington, MN 55420-1196

All Rights Reserved
Printed in the USA

12. Using the holes and the fasteners previously used for mounting the alternator bracket and the idler bracket, secure the compressor mounting bracket to the engine and to the fan support (Fig. 4).

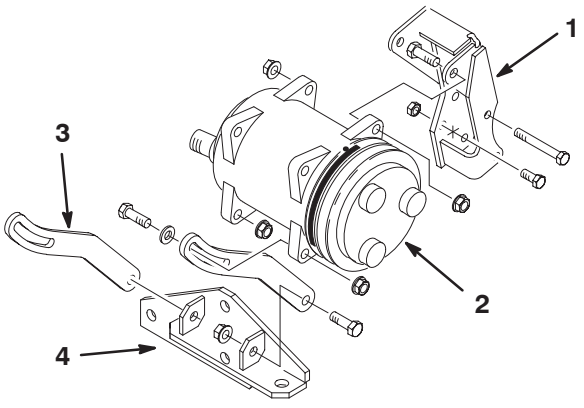

Figure 4

1. Compressor mounting bracket
2. Compressor
3. Compressor strap
4. Engine bracket

13. Mount the alternator mounting bracket to the fan support with (3) 5/16–18 x 1" lg. capscrews and locknuts (Fig. 5).

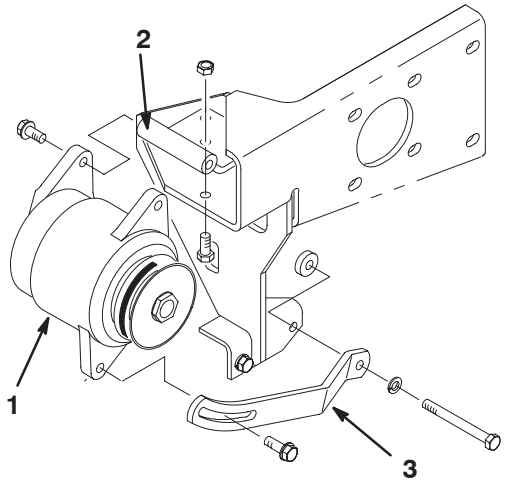

Figure 5

1. Alternator
2. Alternator mounting bracket
3. Alternator strap

14. Mount the alternator to the alternator mounting bracket with the (2) bolts and washers previously removed (Fig. 5).

15. Mount the alternator strap to the fan support and to the engine with a M8 x 80mm capscrew and spacer (Fig. 5). The spacer is to be positioned between the fan support and the engine.

16. Loosely mount the other end of the alternator strap to the alternator with the bolt and washer previously removed (Fig. 5).

17. Mount the top of the compressor to the compressor mounting bracket with (2) 3/8–16 x 1–1/4" lg. capscrews and flange nuts (Fig. 4). Make sure the compressor is mounted so the rear ports are in a horizontal plane.

18. Mount a compressor strap to the outside of each engine bracket tab with a 3/8–16 x 1–1/4" lg. capscrew and flange nut (Fig. 4).

19. Loosely mount the other end of each compressor strap to the bottom of the compressor with a 3/8–16 x 1–3/8" lg. capscrew, flat washer and flange nut (Fig. 4).

20. Install the new engine and fan belts, routing as shown in figure 6.

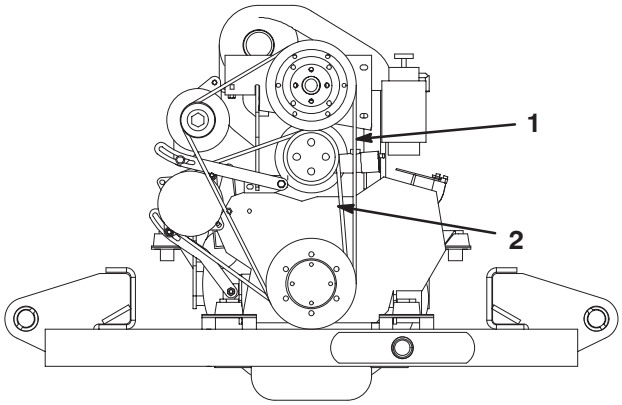

Figure 6

1. Alternator belt
2. Fan belt

21. Check/adjust the belt tension as follows:

- Check the tension by depressing the belt (Fig. 7) at the mid span of the pulleys with inward thumb pressure. The belt should deflect 1/2 in. (12 mm). If deflection is incorrect, proceed to next step.
- Loosen the adjusting bracket bolt and the mounting bracket bolt.
- Move the alternator or compressor in or out as required to attain the desired deflection.
- Tighten the bolts to secure the adjustment.

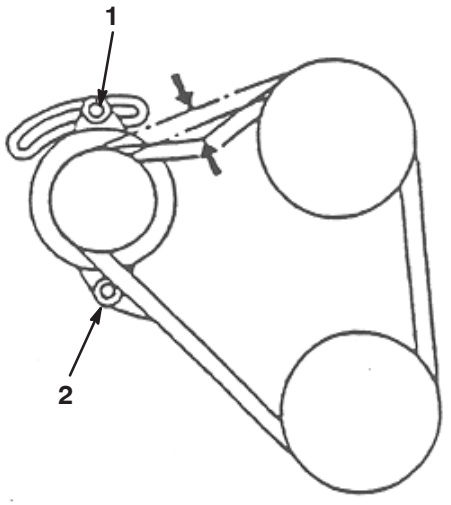

Figure 7

1. Adjusting bracket bolt
2. Mounting bolt

22. Insert drive shaft yoke onto pump spline and secure with fasteners removed (Fig. 3).

23. Re–attach wires to alternator.

24. Re–attach negative battery cable.


TORO®