Form No. 3356–586 Rev A

# TurfDefender™ Electronic Leak Detector Kit

## Reelmaster® 5000, 6000 and 5010 Series Traction Units

**Model No. 03521**

**Installation Instructions**

**The Installation Instructions for Reelmaster 5000/6000 Series Traction Units is on page 2.**

## Installation on Reelmaster 5010 Series

1. Park machine on a level surface, stop the engine and engage the parking brake.
2. On the right side of the machine, raise the hydraulic tank cover (Fig. 1).

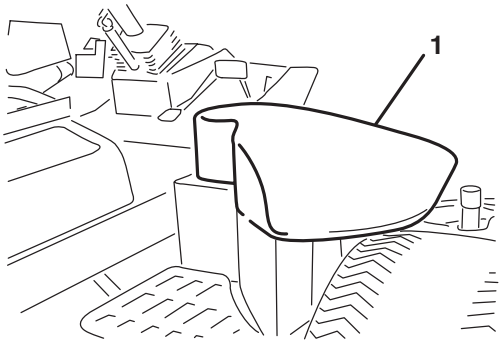


**Figure 1**

1. Hydraulic tank cover

3. Thoroughly clean the top of the hydraulic tank around the tank cap (Fig. 2).




**Figure 2**

1. Tank cap

4. Remove (6) flange head screws (Fig. 3) securing tank cap and gasket to tank and remove components from tank. Retain the filter screen, dipstick and cap for re–installation with kit.

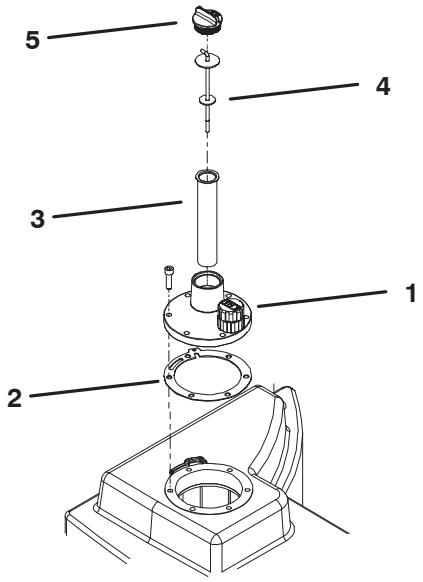


**Figure 3**

1. Tank cap
2. Gasket
3. Filter screen
4. Dipstick
5. Cap

5. Position new flange gasket onto tank aligning mounting holes (Fig. 4). Holes are not symmetrical so make sure gasket is properly positioned.
6. Insert leak detector into tank opening while aligning housing mounting with holes in gasket (Fig. 4).

**Important** Be sure to use the filter screen and dipstick previously removed from the tank. Failure to do so will result in an inaccurate hydraulic oil level and lead to false detects.

7. Secure leak detector housing and gasket to tank with (6) socket head capscrews (Fig. 4). Torque screws to 100–125 in–lb.

**© 2006 by The Toro Company**
**8111 Lyndale Avenue South**
**Bloomington, MN 55420-1196**



All Rights Reserved
Printed in the USA

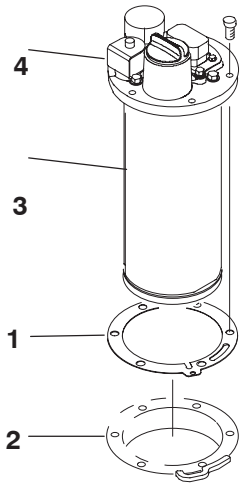


**Figure 4**

1. Flange gasket
2. Tank flange
3. Leak detector
4. Electric solenoid valve

**8.** Locate and remove the cap plug from the back side of the hydraulic tank cover (Fig. 5).

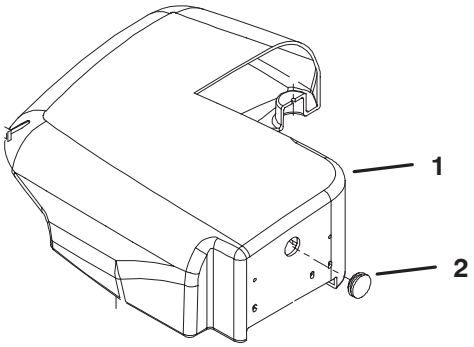


**Figure 5**

1. Hydraulic tank cover
2. Cap plug

**9.** From inside the cover, insert the alarm into the hole and secure with the plastic nut. Alarm terminals must be positioned to the inside of the cover.

**10.** Locate the leak detector harness from traction unit's main wire harness. Plug harness connector into connector on leak detector harness.

**11.** Locate (2) spade terminal wires on leak detector harness. Plug red wire onto (+) positive terminal of leak detector alarm and other wire onto (–) negative terminal. Do not switch wire connections.

## Installation on Reelmaster 5000/6000 Series

**1.** Park machine on a level surface, stop the engine and engage the parking brake.

**Important** On Reelmaster traction unit's with serial numbers prior to 69999, an update to the software is required to accommodate the TurfDefender. Contact your authorized Toro Distributor for assistance.

**Note:** Before the leak detector kit can be installed on most Reelmaster traction units with serial numbers prior to 59999, the hydraulic tank must be replaced with Hydraulic Tank Kit, Model 03522. Contact your authorized Toro Distributor for assistance.

**2.** Open control panel cover. Thru hole in right fender, thoroughly clean top of hydraulic tank around tank cover (Fig. 6).

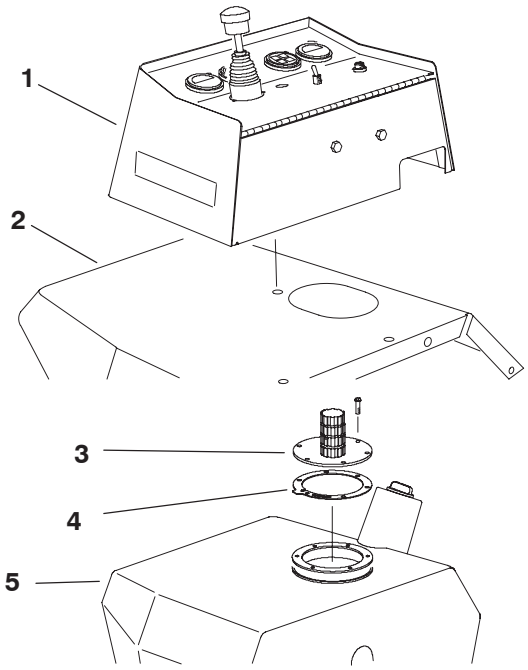


**Figure 6**

1. Control console
2. Right fender
3. Tank cover
4. Gasket
5. Hydraulic tank

**Note:** To simplify cleaning of tank and installation of kit, remove fasteners securing control console and fender to machine and move off tank.

**3.** Remove (6) flange head screws (Fig. 6) securing tank cover and gasket to tank and remove components from tank. Discard components.

4. Position new flange gasket onto tank aligning mounting holes (Fig. 7). Holes are not symmetrical so make sure gasket is properly positioned.

5. Insert leak detector into tank opening while aligning housing mounting with holes in gasket (Fig. 7).

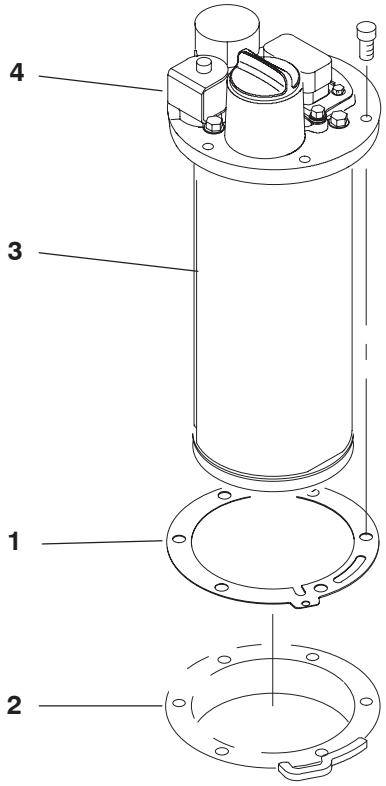


**Figure 7**

1. Flange gasket
2. Tank flange
3. Leak detector
4. Electric solenoid valve

6. Secure leak detector housing and gasket to tank with (6) socket head capscrews (Fig. 7). Torque screws to 100–125 in–lb.

7. Re–install fender and control console, if previously removed.

8. Remove front capscrew and locknut securing fuse block bracket to side of control console (Fig. 8).

9. Mount alarm bracket to fuse block bracket with capscrew and locknut previously removed. Position bracket and alarm as shown in figure 8.

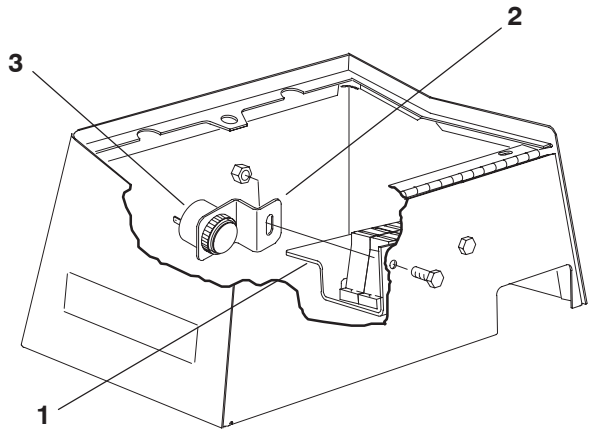


**Figure 8**

1. Fuse block bracket
2. Alarm bracket
3. Alarm

**Note:** If traction unit is equipped with a plastic operator's console, mount the alarm bracket as follows:

- Using the dimensions shown in figure 9, locate, mark and drill a 9/32" dia. hole in operator's side of console.

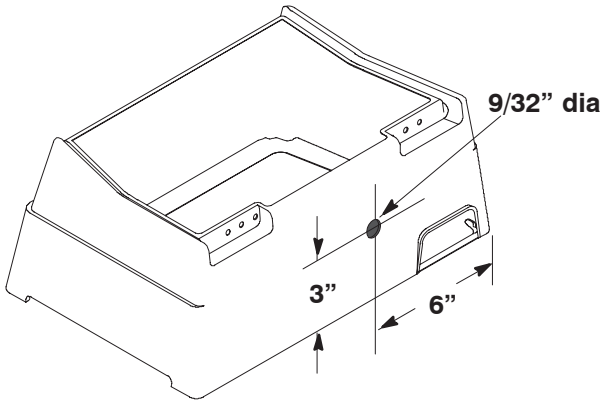


**Figure 9**

10. Mount alarm bracket to console with a 1/4–20 x 3/4" lg. capscrew, (2) 1/4" washers and locknut supplied in kit. Position bracket, fasteners and alarm as shown in figure 10.

**Important** Apply RTV silicone on the bracket surface that will contact inside of console

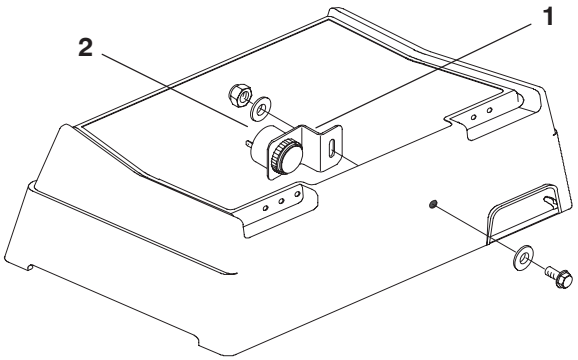


**Figure 10**

1. Alarm bracket 2. Alarm

**Important** On the following Reelmaster traction units, a change to the traction unit wire harness is required to accommodate the TurfDefender™. The change allows the traction unit ignition switch to turn the TurfDefender "ON" and "OFF".

Model 03800 – Serial No. 50300 and prior
Model 03801 – Serial No. 50204 and prior
*Model 03502 – Serial No. 51001 thru 51068
*Model 03530 – Serial No. 51001 thru 51074
*Model 03531 – Serial No. 51001 thru 51016

* Reelmaster 5000 series traction units with serial numbers prior to 51001 require a wire harness adapter and new hydraulic tank. These components are included in Hydraulic Tank Kit, Model 03522. Contact your authorized Toro Distributor for assistance.

If your Reelmaster is not in this serial number range, proceed to step 12.

**11.** Update the traction unit wire harness as follows:

- Remove 5 amp fuse from fuse block "B", slot #3. This removes power to wire going to leak detector connector.
- Locate orange wire leading from position "A" on 4–pin leak detector connector on traction unit. Follow this wire down through sub–harness to the convoluted tubing over the main harness. Cut plastic wire ties securing tubing and trace orange wire into harness about 4 inches. Cut wire at this location and tape or insulate wire end remaining in harness.
- Detach the power and ground connector from hour meter. Locate orange wire leading to hour meter connector. Locate the midpoint of this wire between the connector and where it comes out of main harness. Cut the wire at this point and strip both ends. Strip end of orange wire from leak detector connector. Splice the three wire end's together by inserting two wires into one side of supplied butt splice (blue) and one wire into other side of splice and crimping. After crimping, apply heat to shrink the vinyl covering of splice.
- Replace any plastic wire ties previously removed. Re–attach hour meter connector, reinstall 5 amp fuse removed in step a and confirm operation when key is switched on.
- Measure the voltage between position "A" and position "B" on 4–pin leak detector connector. There should be 12 volts when key switch is in "ON" position and zero voltage when in "OFF" position.

**12.** Inside control console, locate the 4–pin connector from traction unit's main wire harness. Remove and discard connector plug. Plug connector into 4–pin connector on leak detector harness.

**13.** Locate (2) spade terminal wires on leak detector harness. Plug red wire onto (+) positive terminal of leak detector alarm and other wire onto (–) negative terminal. Do not switch wire connections.

# Check Hydraulic Tank Oil Level

The preferred method of checking the oil level in the hydraulic tank when a leak detector is installed is by using the ACE tool (Hand Held Diagnostic Display) or by using TOROPC. The level **Must** be checked immediately after the installation of a leak detector otherwise false alarms may occur. During daily operation, the leak detector will check the oil level for you. If the level is ok, the leak detector will beep once during start up. It is common for the leak detector to beep once when the key is turned from "OFF" to "RUN", and to beep once again after the machine has been started. If a dipstick is used to check the oil level, the level should be approximately 1/4" to 1/2" below the full mark on dipstick (cold oil).

Check the oil level in the hydraulic tank as follows

**1.** The machine should be on a level surface, the oil should be cold, and the cutting units should be raised to the transport position.

**2.** Remove the oil fill cap from the hydraulic tank.

**3.** Connect the ACE Handheld Diagnostic Display (or a laptop with TOROPC running) to the TurfDefender™ loopback connector. Place the TurfDefender™ Overlay on the tool.

**4.** Turn the key on, and tool will illuminate. Toggle the tool to show "Inputs Displayed"

**5.** The left side of the tool displays the oil level in the tank. The oil is at the proper level when the 3rd light (from the top) or the 3rd and 4th lights are illuminated (Fig. 13). (When using TOROPC, the 3rd and 4th inputs may be highlighted).

**6.** Add or drain oil until the proper level is achieved.

**7.** Replace the oil–fill cap on the hydraulic tank. Tighten until snug.

# Leak Detector Operation

The TurfDefender™ is an electronic hydraulic fluid leak detection device that fits inside the hydraulic tank of your machine. It is a pressure based system which requires a sealed hydraulic tank to function properly. Very small changes to the oil level in the sealed tank result in a large movement of the leak detector's internal float. The TurfDefender's internal microprocessor analyzes the float movement and determines if there is a leak in the system.

- Turn ignition key to "ON" position to start the system. The system will reset itself whenever the ignition key is moved to "OFF" position. Wait 5 seconds, then move key to "ON" position to restart the system.
- When machine is started, the alarm will give one short beep to indicate that everything is operating properly. If the alarm makes no noise at all, it should be checked by a mechanic.
- If the alarm gives 4 short beeps it means a system problem has been detected and it should be checked by a mechanic. If the TurfDefender™ is programmed with software (Toro Part No. 94–6409) revisions – A, B, C, D or E, the alarm will continue the 4 beep pattern for approximately 1.5 minutes, and then stop. If it is programmed with revision level F or above, the alarm will repeat the 4 beep pattern twice, and then cease to give further error indication until another fault is detected. In either case, once the ignition key is moved to the "OFF" position, all alarm reports will cease.

**Note:** The low or high oil level 4 beep signal may occur if machine is started on a slope. Move machine to a level surface, move ignition key to "OFF" position, wait 5 seconds, then move key to "ON" position to restart the system.

- If the alarm gives long continuous beeps while mowing and shuts off the cutting units, it means that a leak has been detected. On the traction unit, the red light on the steering console or on the control arm will also blink indicating the ECU has shut off the cutting unit's.

# Checking Operation

The operation of the TurfDefender™ should be checked if any of the following conditions occur:

**Note:** The hand held ACE Diagnostic Display can be used to identify many of the problems.

- No beeps are heard when ignition switch is turned "ON".
- Any time the machine gives a series of 4 short beeps.

**Note:** The ACE Diagnostic Display may have to be connected before shutting off the ignition key in order to identify the problem.

**Warning**

**To identify some problems, engine may have to be running. To guard against possible personal injury, engage parking brake and keep hands, feet, face and other parts of the body away from moving parts.**

- False alarms are observed.

**Note:** Refer to Troubleshooting Guide on page 8 for additional information.

1. Park machine on a level surface and engage the parking brake.
2. Open cover. Locate leak detector harness loopback connector with hydraulic symbol tag (Fig. 11). Carefully unplug loopback connector from harness connector.



**Figure 11**

3. Connect the ACE Diagnostic display connector to the correct harness loopback connector. Install TurfDefender overlay decal (supplied with leak detector kit) onto ACE Diagnostic Display (Fig. 12, page 8).
4. The ignition key switch must be turned to the "ON" position.

**Note:** Red text on the overlay decal refers to inputs and green text refers to outputs.

5. The red "Inputs displayed" LED (Light Emitting Diode), on lower right column of the ACE Diagnostic Display, should be illuminated. If green "Outputs displayed" LED is illuminated, press and release the toggle button, on ACE Diagnostic Display, to change LED to "Inputs displayed". Do not hold button down (Fig. 12).

**If TurfDefender is functioning normally:**

1. When the "Inputs displayed" LED is lit, the actual Float position (1 or 2 LED's on left side) and "Oil level OK" LED (right side) – should be displayed (Fig. 13).
2. Press toggle button until green "Outputs displayed" LED is lit. "Valve ON", "data line" and "self diagnostic"LED's should be lit steadily. "Alarm ON" LED may be displayed temporarily (about 5 seconds) (Fig. 14).

**Note:** If "data line" or "self diagnostic" LED's are blinking, there is a problem in the system.

**If No beeps are heard:**

1. Check alarm wires to make sure they are not disconnected, broken or "+" and "–" reversed.
2. Make sure TurfDefender 4–pin connector is plugged in.
3. On the Reelmaster 5000 & 6000 Series, make sure TurfDefender 5 amp fuse (fuse block "B", slot #3) is not blown. On the Reelmaster 5010 Series make sure the 10 amp main power fuse is not blown.
4. Toggle "outputs displayed" on ACE Diagnostic display (Fig. 14).
   - Alarm open circuit (LED blinking): Check / replace TurfDefender alarm or wires.
   - Alarm short circuit (LED blinking): Check / replace TurfDefender alarm or wires.

**If 4 beeps are heard:**

The most common cause for a 4 beep signal is from an improper oil level reading. Make sure machine is on a level surface when checking oil level. Since oil level will vary with temperature, it is best to check when cool.

1. When toggling "input", an LED should display (Fig. 12) any of the following problems diagnosed by the TurfDefender:
   - Oil level low: Position machine on a level surface and fill to proper level.
   - Oil level high: Position machine on a level surface and remove excess oil until proper level is attained.
   - Air leak in system: Assure tank cap is tight or check for leak in tank.

**Note:** Only large air leaks can be detected by hand held ACE Diagnostic Display. A leak down test is required to identify small air leaks. Consult your Authorized Toro Distributor for assistance.

2. When toggling "output" a LED should display (Fig. 14) any of the following problems diagnosed by the TurfDefender:
   - Valve open circuit (LED blinking): Check / replace TurfDefender electric solenoid valve (Fig. 7) or wires.
   - Valve short circuit (LED blinking): Check / replace TurfDefender electric solenoid valve (Fig. 7) or wires.
   - Self diagnostic LED Blinking: Internal circuit failure in TurfDefender. Consult your Authorized Toro Distributor for assistance.
   - Data Line LED Blinking: Problem with communications between machine and leak detector; or problem with wires. Consult your Authorized Toro Distributor for assistance.
   - Drip Drop LED Blinking: A slow oil leak (level drop) may be detected.

**Note:** If machine must be operable with leak detector disabled, unplug leak detector 4–pin connector from 4–pin connector of main harness. Do not unplug leak detector alarm.

**If false alarms are observed**:

1. Oil level may be low causing air to be drawn out of system. Check oil level.
2. Extremely hard left turns can cause oil to slosh to the right, exposing suction line and purging air out of system. Normal maneuvering should not cause this condition.
3. Air leak in system. Check to make sure cap is securely on tank. Contact your local authorized Toro Distributor for further assistance with air leak problem.
4. To check for a system problem, install hand held ACE Diagnostic Display, toggle input/output and check for any problems previously discussed.

**Note:** The system will reset itself whenever the ignition key is turned to "OFF" position. The hand held ACE Diagnostic Display must be connected and observed during a false alarm. Once the ignition key is turned to "OFF" position, the TurfDefender will reset itself.

5. Your Authorized Toro Distributor has equipment to analyze system problems.

**Important** **The ACE Diagnostic Display must not be left connected to the machine. It is not designed to withstand the environment of the machine's every day use. When done using the ACE Diagnostic Display, disconnect them from the machine and reconnect loopback connectors to harness connectors. Machine will not operate without loopback connectors installed on harness. Store ACE Diagnostic Display in dry, secure location in shop, not on machine.**

# ELECTRICAL SCHEMATIC

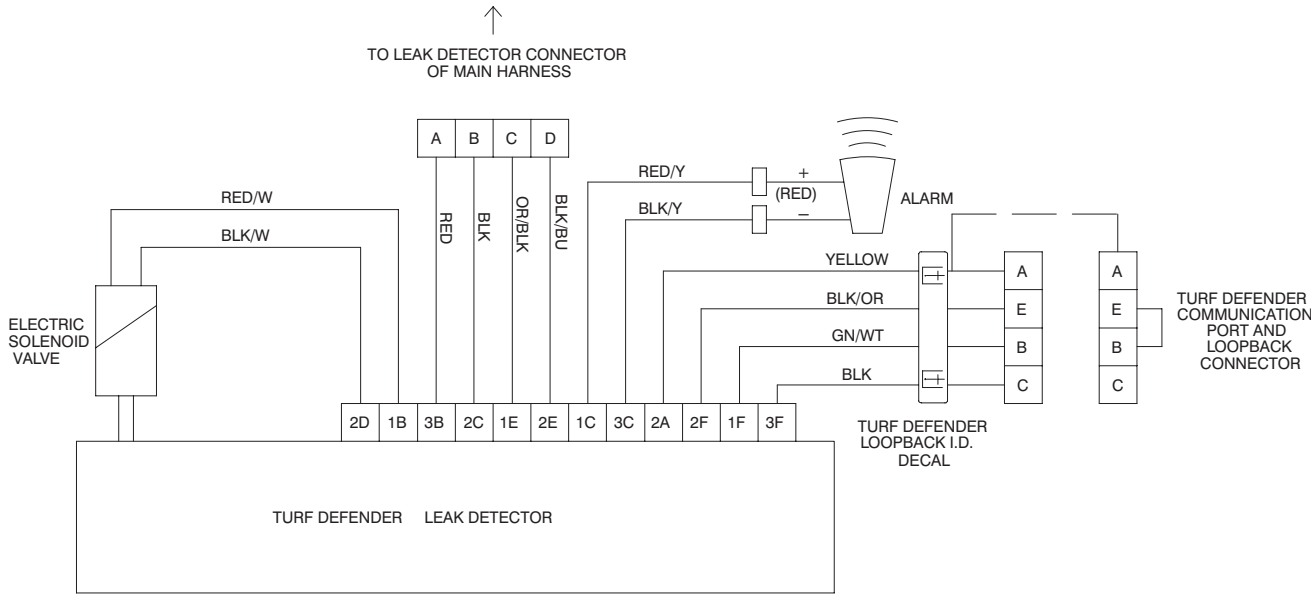

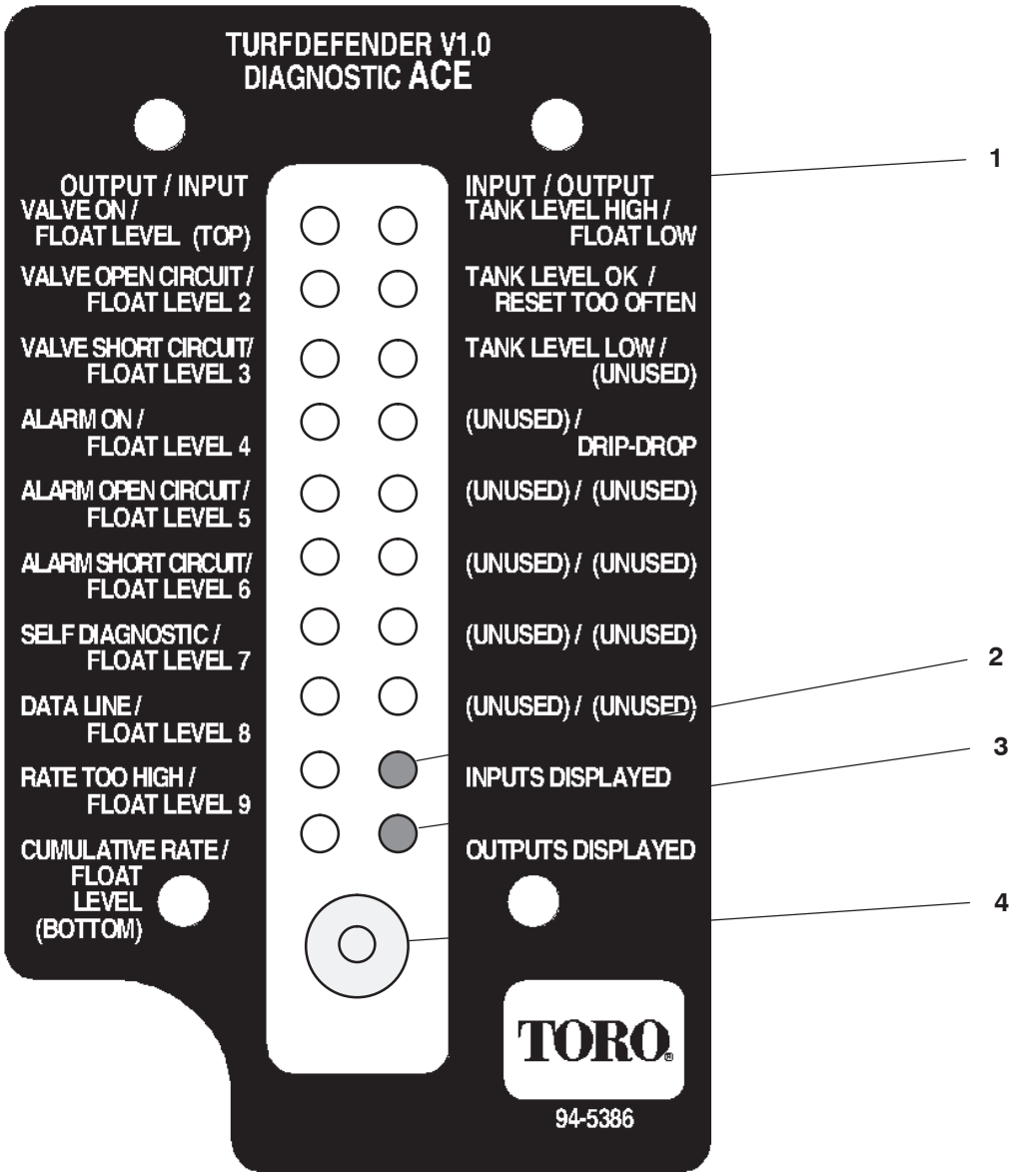


**Figure 12**
**ACE Diagnostic Display Functions**

---

**1.** Overlay decal (English shown)

**2.** “Inputs displayed” LED (Red when illuminated)

**3.** “Outputs displayed” LED (Red when illuminated)

**4.** Toggle button

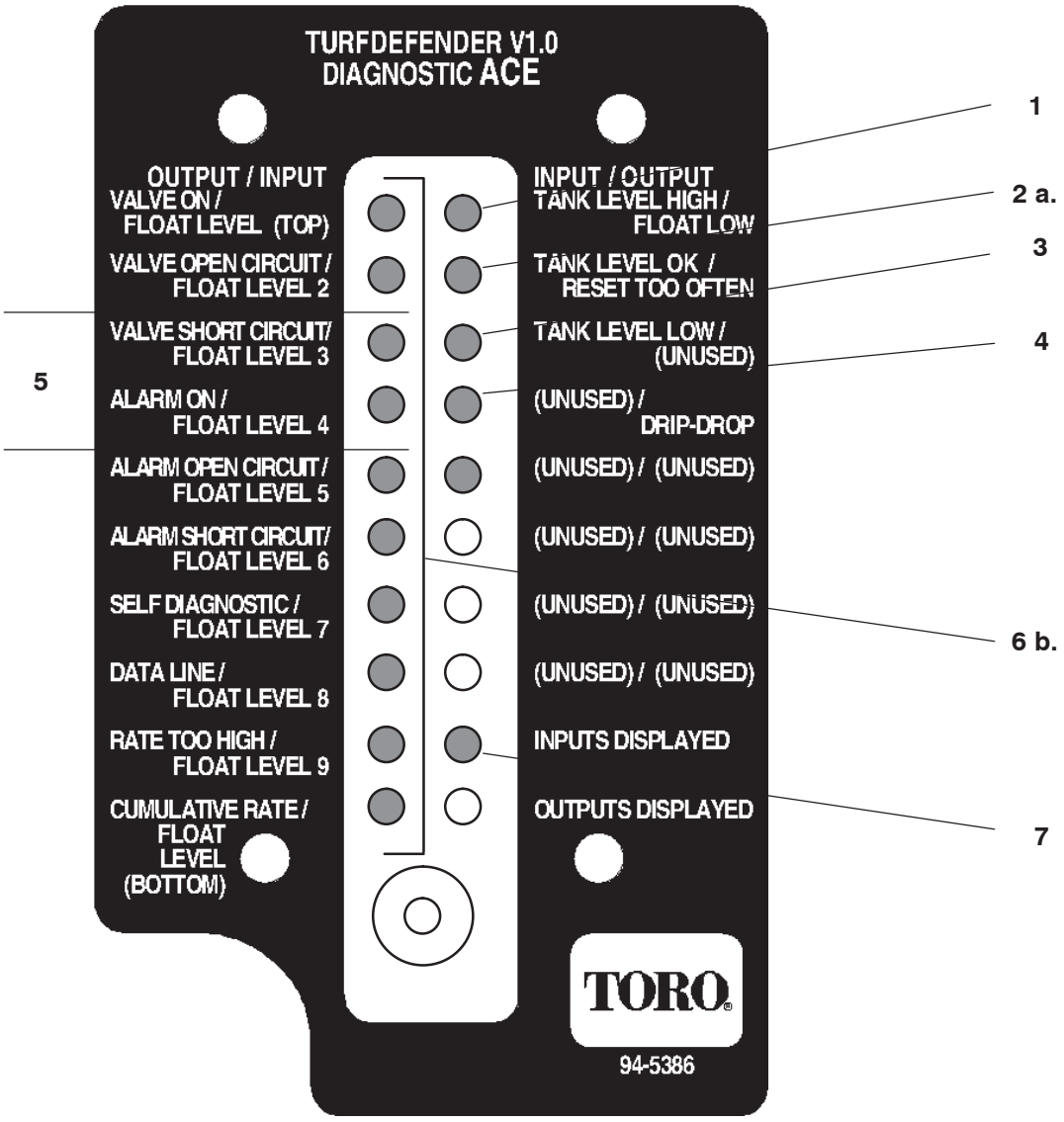


**Figure 13**

**Using “Inputs Displayed” (Red Text)**

---

1. LED lit if oil level too high
2. LED lit if oil level OK
3. LED lit if oil level too low
4. LED lit if slow leak detected
5. Target oil level–Cold oil & cutting units raised
6. One or two LED’s lit displaying relative position of the Turfdefender’s internal float. (any combination of #3, or 3 & 4, or 4
7. “Inputs displayed” LED “ON” (Red)

Normal Operation:

a. “Oil level OK” LED lit
b. 1 or 2 LED’S lit on left column

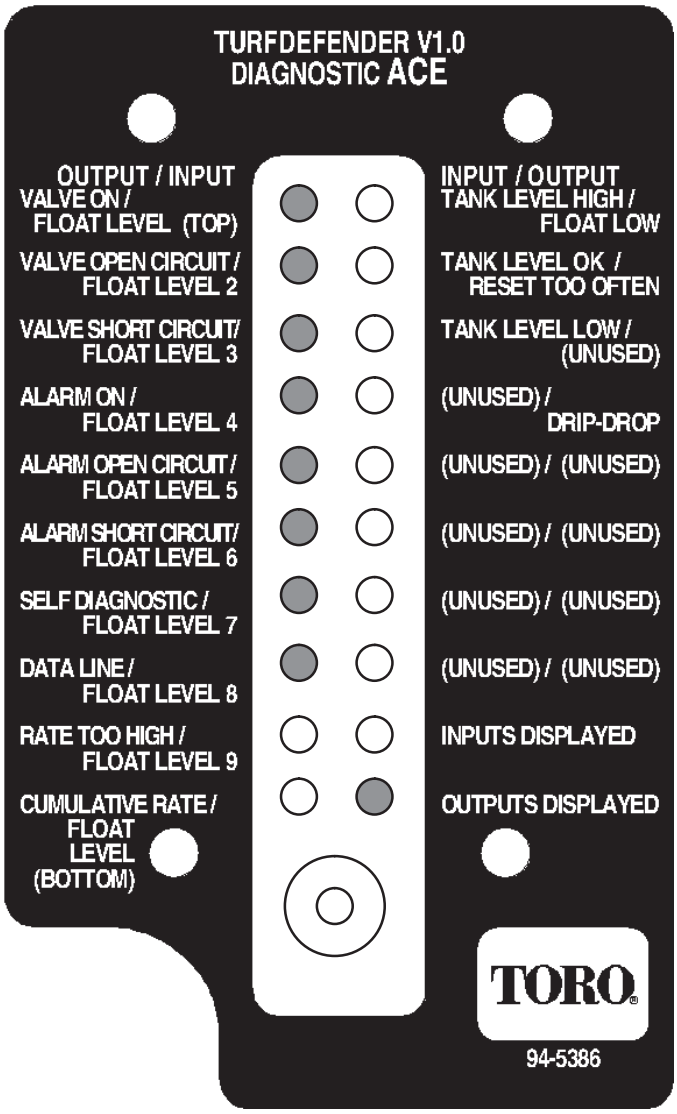


**Figure 14**

**Using “Outputs Displayed” (Green Text)**

---

Normal Operation

a. “Valve ON” LED lit steadily

b. “Self Diagnostic‘’ LED lit steadily

b. “DATA LINE‘’ LED lit steadily

b. “Alarm ON‘’ LED lit steadily

Problem Diagnosed:

The appropriate LED will blink to identify the problem

# Turfdefender Rapid Troubleshooting Guide

## The following is a quick guide to the most common problems likely to be encountered. The hand–held ACE Diagnostic Display is helpful for identifying specific problems

### 4–beep faults are occurring:

| | |
|---|---|
| Oil level is incorrect | Check oil level (see instructions) |
| Machine started on a slope (oil level error) | Try again on a level surface, add oil as required |
| Solenoid valve unplugged | Reconnect |
| Hydraulic tank cap is loose | Tighten |
| Reelmaster ECU has wrong programming | Contact Toro Distributor |

### False–alarms (continuous beeps but no leak) are occurring:

| | |
|---|---|
| Hydraulic tank cap is loose | Tighten |
| Operator is making severe left turns | Slow down while turning |
| Operator jiggles traction while waiting | Leave pedal in Neutral while waiting |
| Solenoid valve not sealing | Check if loose; replace if defective |
| Reelmaster ECU has wrong programming | Contact Toro Distributor |

### No beep occurs at start–up:

| | |
|---|---|
| Alarm wires are reversed or disconnected | Connect red to “+”, black to “–” |
| TurfDefender 4–pin connector is unplugged | Reconnect |
| TurfDefender fuse is blown | Replace |

### Oil comes out vent:

| | |
|---|---|
| Excessive air bubbles in oil have caused float to elevate | Purge air by depressing float to bottom with a wire inserted through the vent hole<br>Correct aeration of oil |


TORO®