FORM NO. 3314-412

TORO®

MODEL NO. 20911B-1000001 & UP
MODEL NO. 20916B-1000001 & UP

PARTS CATALOG

48cm H. P. & S. P. REAR BAGGER

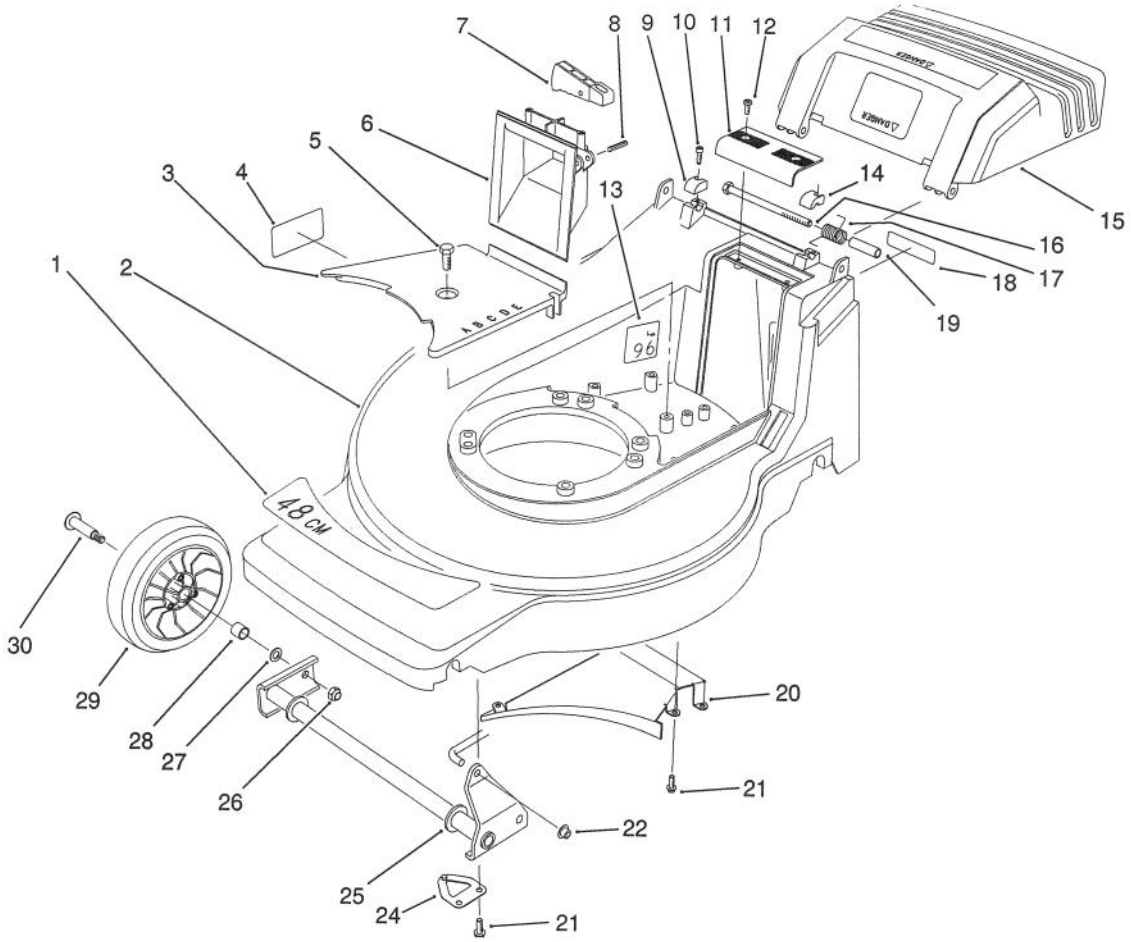

C-0361

HOUSING ASSEMBLY (Model No. 20911B)

Ref. No.	Part No.	Description	No. Used
1	71-8290	Decal - 48cm	1
2	14-0049	Housing - 48cm	1
3	71-7920	Cover - Belt	1
4	62-3860	Decal - Danger	1
5	32144-70	Screw - Hex. Flange Hd.	1
6	71-7870	Grip - Lower	1
7	71-7930	Trigger - H.O.C.	1
8	3284-5	Pin - Roll	1
9	71-7910	Cap - Hinge Bolt R.H.	1
10	65-5210	Screw - Thread Forming	2
11	71-7860	Grip - Upper	1
12	32144-97	Screw - Thread Forming	2
13	66-1700	Decal - Noise Rating	1
14	71-7900	Cap - Hinge Bolt L.H.	1
15	71-8241	Door - Discharge	1

Ref. No.	Part No.	Description	No. Used
16	322-29	Screw - Cap Hex. Hd.	2
17	71-8300	Spring - Door	2
18	66-0680	Decal - French Regulation	1
19	71-8580	Spacer - Door	2
20	71-7990	Ramp - Discharge	1
21	32144-4	Screw - Thread Forming	8
22	32112-11	Nut - Push	1
24	71-8830	Retainer - Shaft	2
25	71-7820	Pivot - Front	1
26	52-3620	Nut - Lock	2
27	40-1940	Washer - Wheel	2
28	27-6250	Bushing - Wheel	4
29	46-1113	Wheel & Tire Assembly (Incl. Ref. #28)	2
30	27-6230	Bolt - Wheel	2

©The TORO Company - 1990

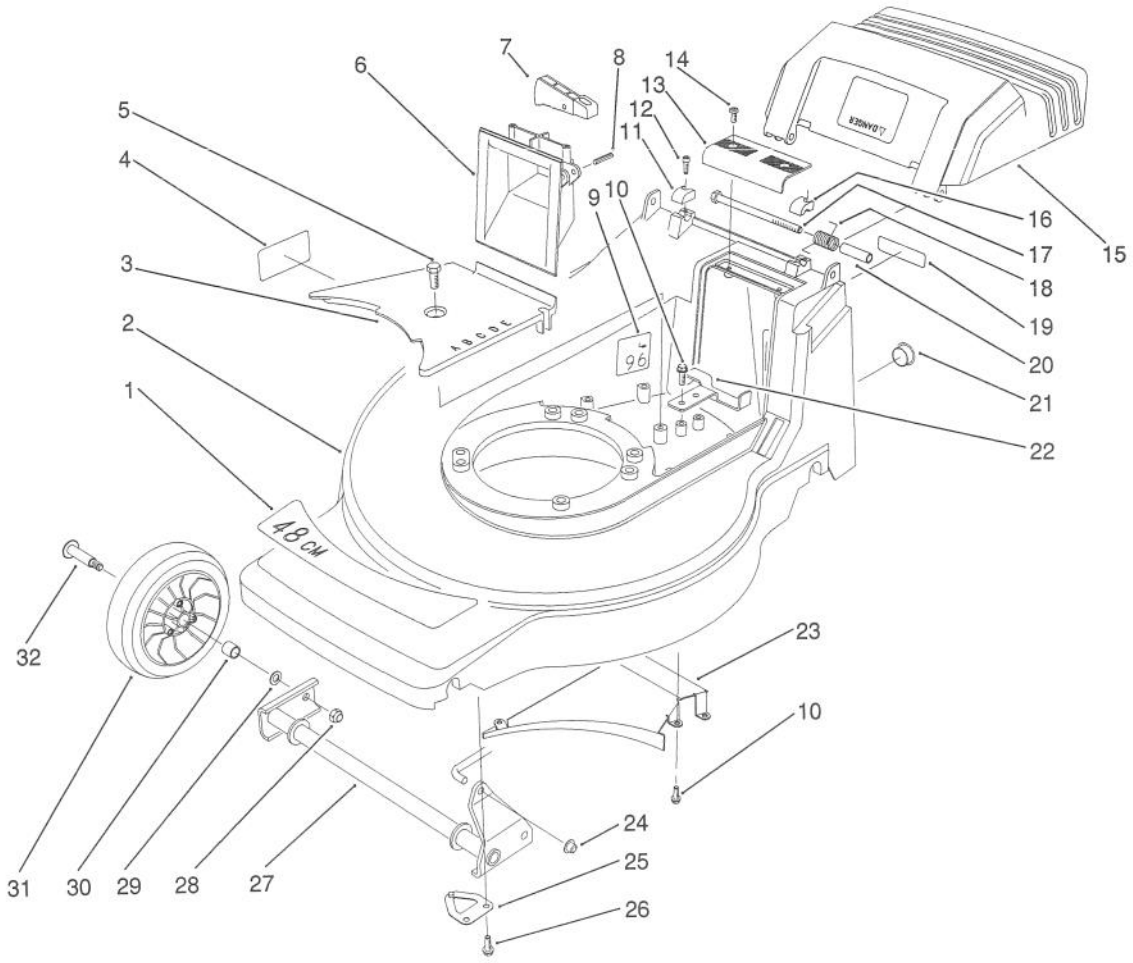

C-0633

HOUSING ASSEMBLY (MODEL NO. 20916B)

Ref. No.	Part No.	Description	No. Used
1	71-8290	Decal - 48cm	1
2	14-0049	Housing - 48cm	1
3	71-7920	Cover - Belt	1
4	62-3860	Decal - Danger	1
5	32144-70	Screw - Hex. Flange Hd.	1
6	71-7870	Grip - Lower	1
7	71-7930	Trigger - H.O.C.	1
8	3284-5	Pin - Roll	1
9	66-1700	Decal - Noise Rating	1
10	49-2040	Screw - Thread Forming	6
11	71-7910	Cap - Hinge Bolt R.H.	1
12	65-5210	Screw - Thread Forming	2
13	71-7860	Grip - Upper	1
14	32144-97	Screw - Thread Forming	2
15	71-8240	Door - Discharge	1
16	71-7900	Cap - Hinge Bolt L.H.	1
17	322-29	Screw - Cap Hex. Hd.	2

Ref. No.	Part No.	Description	No. Used
18	71-8300	Spring - Door	2
19	66-0680	Decal - French Regulation	1
20	71-8580	Spacer - Door	2
21	2410-74	Plug - Hole	1
22	71-7890	Guide - Belt Rear	1
23	71-7990	Ramp - Discharge	1
24	32112-11	Nut - Push	1
25	71-8830	Retainer - Shaft	2
26	11-9760	Screw - Thr'd Forming	4
27	71-7820	Pivot - Front	1
28	52-3620	Nut - Lock	2
29	40-1940	Washer - Wheel	2
30	27-6250	Bushing - Wheel	4
31	46-1113	Wheel & Tire Assembly (Incl. Ref. #30)	2
32	27-6230	Bolt - Wheel	2

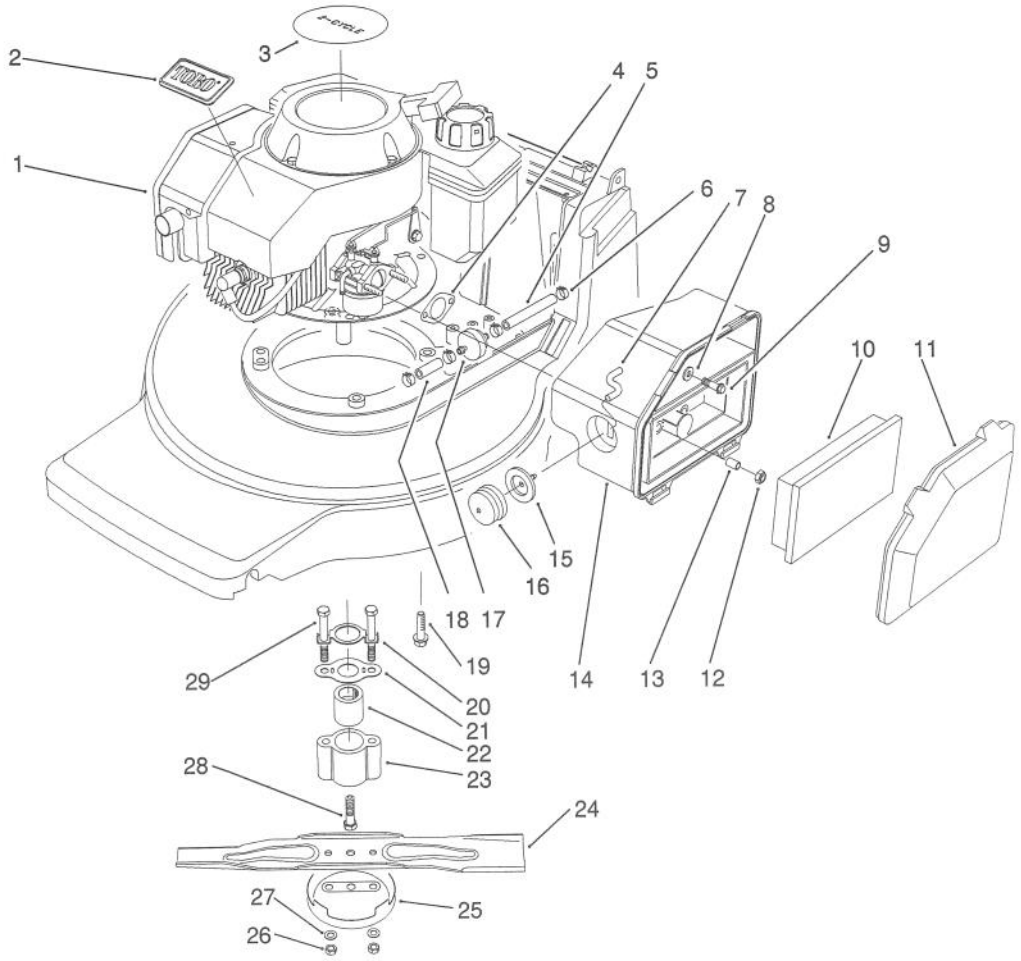

C–0362

ENGINE ASSEMBLY (Model No. 20911B)

Ref. No.	Part No.	Description	No. Used
1	77–2800	Engine – 2 Cycle	1
2	46–8290	Plate – TORO Logo	1
3	57–3110	Decal – Recoil	1
4	81–0090	Gasket – Air Cleaner	1
5	51–3215	Line – Fuel	1
6	2412–95	Clamp – Fuel Line	4
7	44–3172	Hose – Primer	1
8	3256–16	Washer – Flat	1
9	51–2690	Screw – Hex. Flange Hd.	1
10	63–9380	Element – Air Cleaner	1
11	63–9340	Cover – Air Cleaner	1
12	50–7180	Nut – Lock	2
13	62–3980	Spacer	2
14	63–9330	Body – Air Cleaner	1
15	44–2750	Body – Primer	1

Ref. No.	Part No.	Description	No. Used
16	66–7460	Bulb – Primer	1
17	56–6360	Filter – Fuel	1
18	51–3216	Line – Fuel	1
19	66–9302	Bolt – Engine	3
20	71–9220	Retainer – Bracket	1
21	71–8840	Spring – Friction	1
22	71–8780	Hub – Crankshaft	1
23	71–8790	Retainer – Blade	1
24	71–8210	Blade – 48cm	1
25	80–2770	Cup – Anti–Scalp	1
26	3296–6	Nut – Lock	2
27	40–1940	Washer	2
28	71–8950	Screw – Crankshaft	1
29	71–8940	Screw – Blade	2

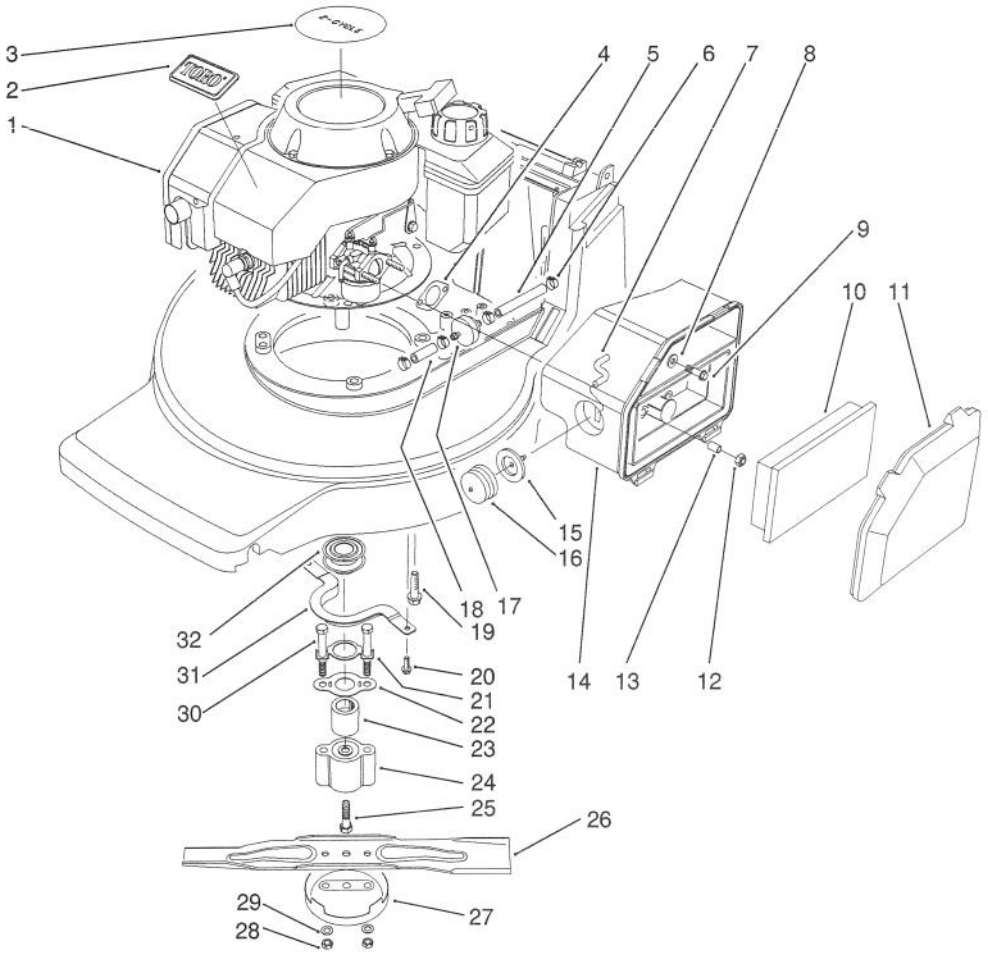

C-0634

ENGINE ASSEMBLY (Model No. 20916B)

Ref. No.	Part No.	Description	No. Used
1	77-2800	Engine - 2 Cycle	1
2	46-8290	Plate - TORO Logo	1
3	57-3110	Decal - Recoil	1
4	81-0090	Gasket - Air Cleaner	1
5	51-3215	Line - Fuel	1
6	2412-95	Clamp - Fuel Line	4
7	44-3172	Hose - Primer	1
8	3256-16	Washer - Flat	1
9	51-2690	Screw - Hex. Flange Hd.	1
10	63-9380	Element - Air Cleaner	1
11	63-9340	Cover - Air Cleaner	1
12	50-7180	Nut - Lock	2
13	62-3980	Spacer	2
14	63-9330	Body - Air Cleaner	1
15	44-2750	Body - Primer	1
16	66-7460	Bulb - Primer	1

Ref. No.	Part No.	Description	No. Used
17	56-6360	Filter - Fuel	1
18	51-3216	Line - Fuel	1
19	66-9302	Bolt - Engine	3
20	32144-4	Screw - Thread Forming	2
21	71-9220	Retainer - Bracket	1
22	71-8840	Spring - Friction	1
23	71-8780	Hub - Crankshaft	1
24	71-8790	Retainer - Blade	1
25	71-8950	Screw - Crankshaft	1
26	71-8210	Blade - 48cm	1
27	42-0910	Cup - Anti-Scalp	1
28	52-3620	Nut - Lock	2
29	40-1940	Washer	2
30	71-8940	Screw - Blade	2
31	71-7960	Guide - Belt Engine	1
32	62-7550	Pulley - Driver	1

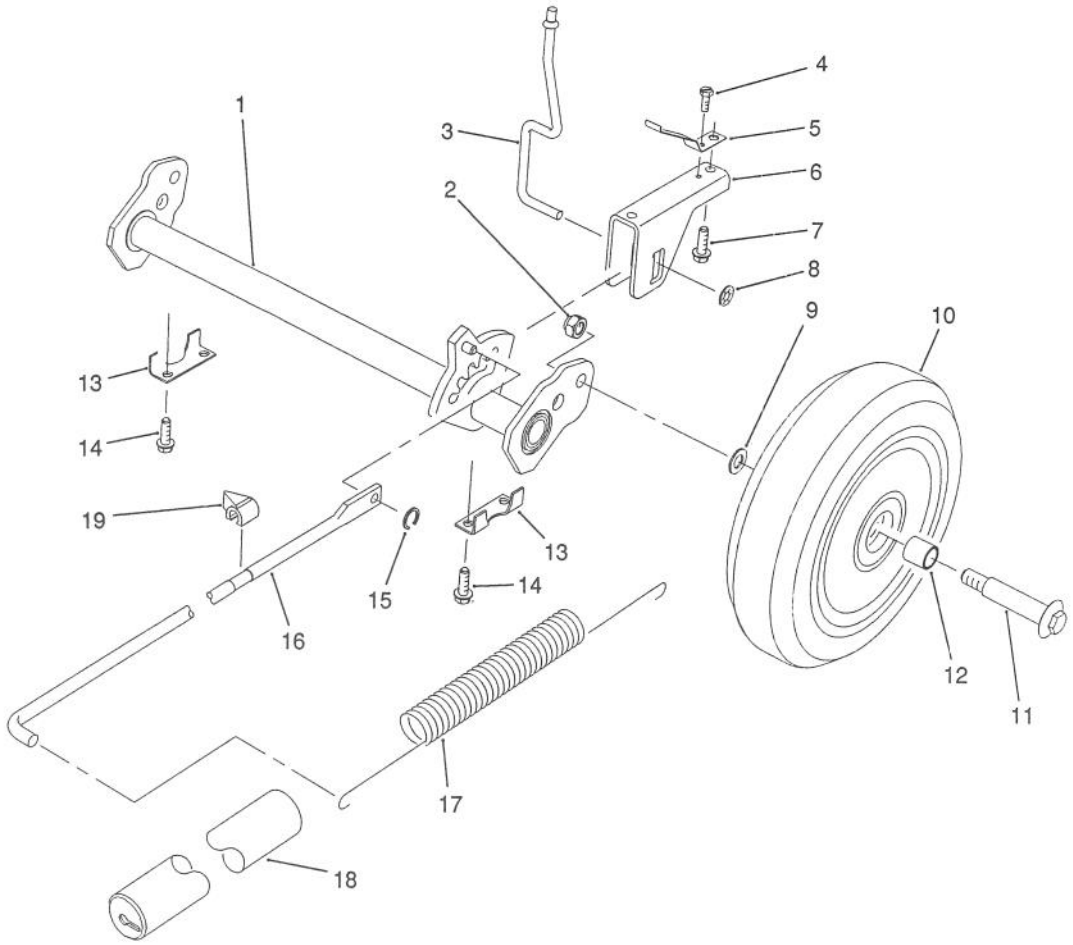

H. P. REAR AXLE ASSEMBLY (Model No. 20911B)

Ref. No.	Part No.	Description	No. Used
1	71-7800	Pivot - Rear H.P.	1
2	52-3620	Nut - Lock	2
3	71-7840	Rod - Trigger	1
4	32144-31	Screw - Thread Forming	1
5	71-8060	Spring - Trigger Return	2
6	71-8080	Saddle - H.O.C.	1
7	63-8590	Screw - Thread Forming	2
8	32112-13	Nut - Push	1
9	40-1940	Washer - Wheel	2
10	11-9509	Wheel & Tire Assembly (Incl. Ref. #12)	2

Ref. No.	Part No.	Description	No. Used
11	27-6230	Bolt - Wheel	2
12	27-6250	Bushing - Wheel	4
13	71-7770	Plate - Rear Suspension	2
14	32144-4	Screw - Thread Forming	4
15	32151-93	Ring - Grip	1
16	71-7970	Rod - Link	1
17	71-7740	Spring - Counterbalance	1
18	71-8450	Cover - Spring	1
19	71-7980	Indicator - H.O.C.	1

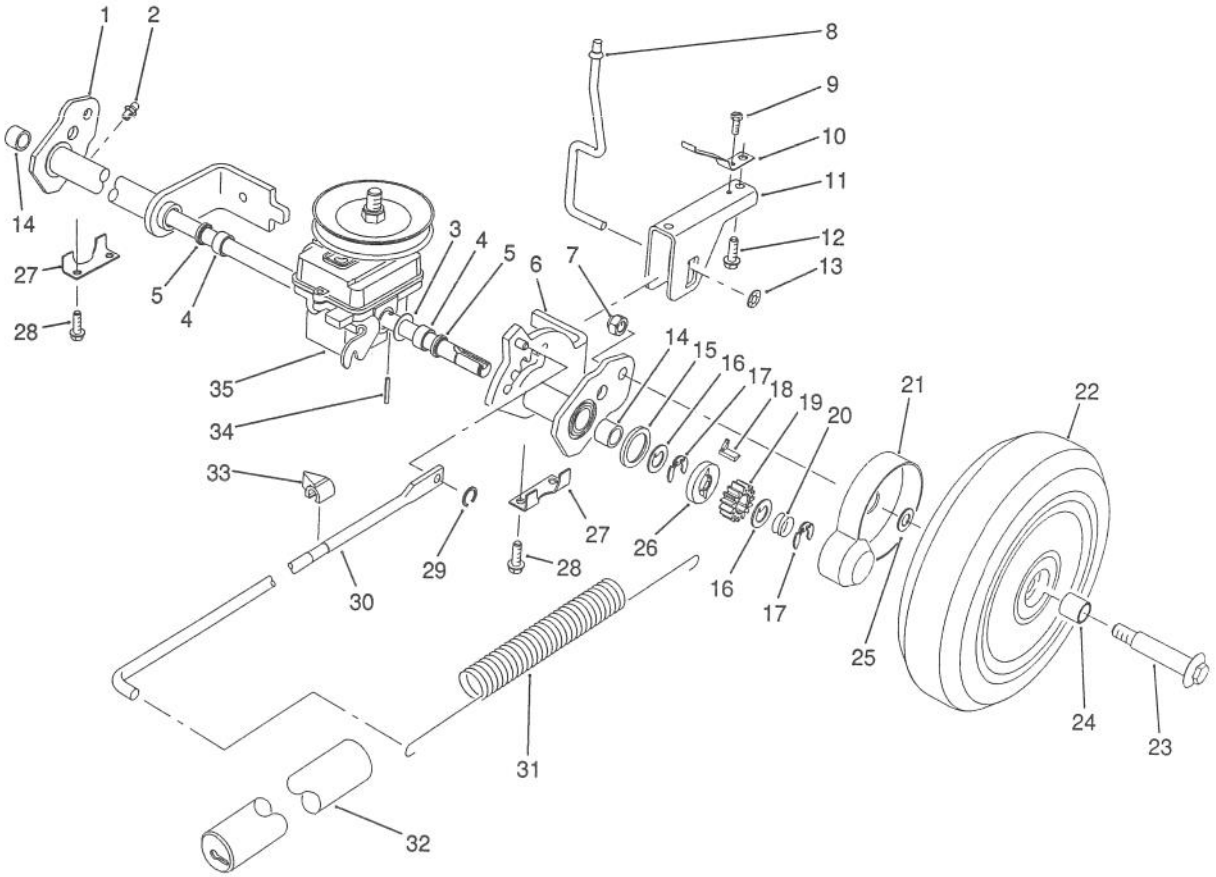

C-0364

S. P. REAR AXLE ASSEMBLY (Model No. 20916B)

Ref. No.	Part No.	Description	No. Used
1	71-8430	Rear Pivot Assembly R.H. (Incl. Ref. #2, 4, 5 & 14)	1
2	302-32	Fitting - Grease	2
3	36-4780	Washer	2
4	47-2890	Bushing - Sleeve	2
5	47-6730	Seal - Grease	2
6	71-8440	Rear Pivot Assembly L.H. (Incl. Ref. #2, 4, 5 & 14)	1
7	52-3620	Nut - Lock	2
8	71-7840	Rod - Trigger	1
9	32144-31	Screw - Thread Forming	1
10	71-8060	Spring - Trigger Return	2
11	71-8080	Saddle - H.O.C.	1
12	63-8590	Screw - Thread Forming	2
13	32112-13	Nut - Push	1
14	48-2060	Bearing - Needle	2
15	65-4710	Washer - Friction	2
16	65-4740	Washer - Keyed Thrust	4
17	65-2720	Ring - Retaining	4
18	66-6050	Key - Rocking L.H.	1
*	66-6040	Key - Rocking R.H.	1

Ref. No.	Part No.	Description	No. Used
19	65-4750	Gear - Pinion	2
20	65-4720	Spring - Compression	2
21	74-1660	Cover - Wheel	2
22	11-9519	Wheel, Tire & Gear Assy. (Incl. Ref. #24)	2
23	27-6230	Bolt - Wheel	2
24	27-6250	Bushing - Wheel	4
25	74-1670	Spacer - Wheel	2
26	65-4760	Washer - Clutch	2
27	71-7770	Plate - Rear Suspension	2
28	49-2040	Screw - Thread Forming	4
29	32151-93	Ring - Grip	1
30	71-7970	Rod - Link	1
31	71-7740	Spring - Counterbalance	1
32	71-8450	Cover - Spring	1
33	71-7980	Indicator - H.O.C.	1
34	32121-88	Pin - Roll	2
35	71-8250	Gearbox Assembly	1

*Not Illustrated

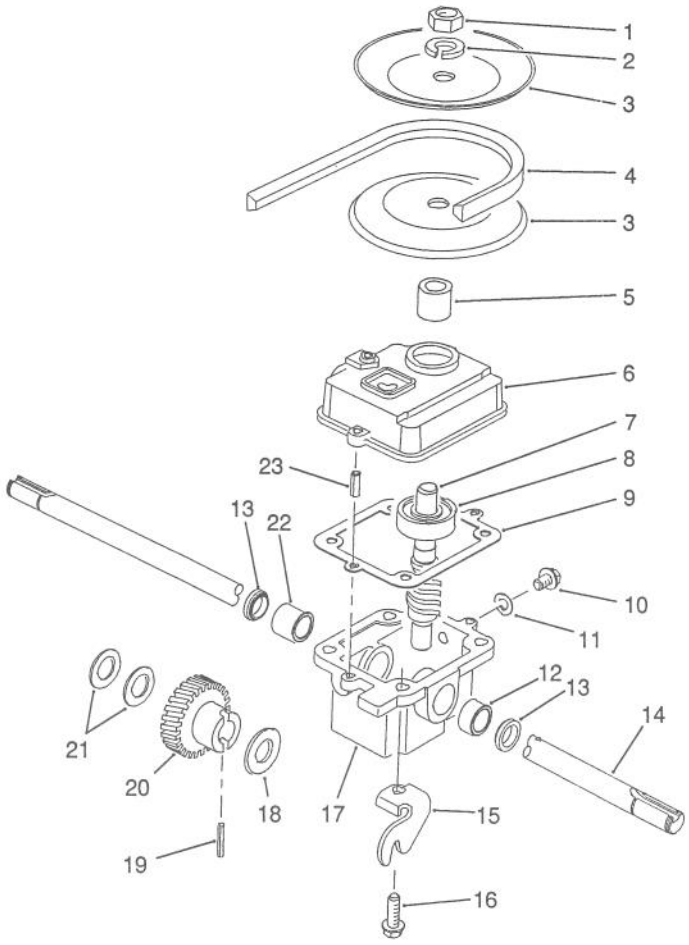

C-0365

GEARBOX ASSEMBLY NO. 71-8250 (Model No. 20916B)

Ref. No.	Part No.	Description	No. Used
1	3220-4	Nut - Jam	1
2	3253-6	Washer - Lock	1
3	71-7750	Pulley - Half	2
4	71-8500	Belt - V	1
5	71-7570	Spacer - Pulley	1
6	39-1103	Cover - Gearbox	1
7	71-8050	Shaft & Worm	1
8	47-7250	Bearing - Ball	1
9	36-1000	Gasket - Gearbox	1
10	28-1550	Screw - Drain	1
11	46-9640	Gasket - Drain Screw	1
12	47-2890	Bushing - Sleeve	1

Ref. No.	Part No.	Description	No. Used
13	47-6730	Seal - Oil	2
14	71-7880	Shaft - Output	1
15	71-8120	Bracket - Traction	1
16	49-2040	Screw - Thread Forming	4
17	33-2061	Case - Gearbox	1
18	3-0724	Washer - Thrust	1
19	32121-120	Pin - Roll	1
20	71-8140	Gear - Helical	1
21	36-4780	Washer - Thrust	2
22	47-2900	Bushing - Sleeve	1
23	32121-1	Pin - Roll	2

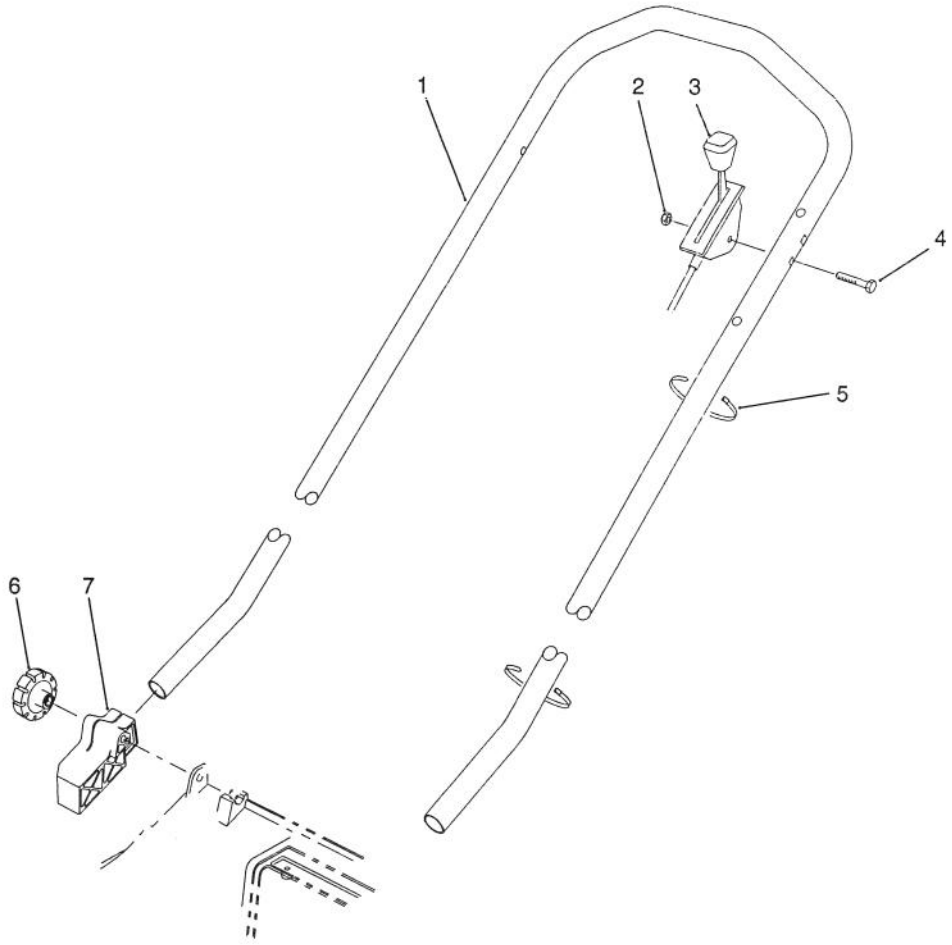

C-0366

H. P. HANDLE ASSEMBLY (Model No. 20911B)

Ref. No.	Part No.	Description	No. Used
1	71-8030	Handle	1
2	3296-56	Nut - Lock	1
3	71-8381	Control - Throttle Bend Type #2 Sheath Lg. 44.00 Wire Lg. 2.50	1

Ref. No.	Part No.	Description	No. Used
4	46-6430	Screw - Cap Hex. Hd.	1
5	3290-378	Tie - Cable	2
6	19-4050	Knob - Handle	2
7	71-8090	Mount - Handle L.H.	1
*	71-8100	Mount - Handle R.H.	1

*Not Illustrated

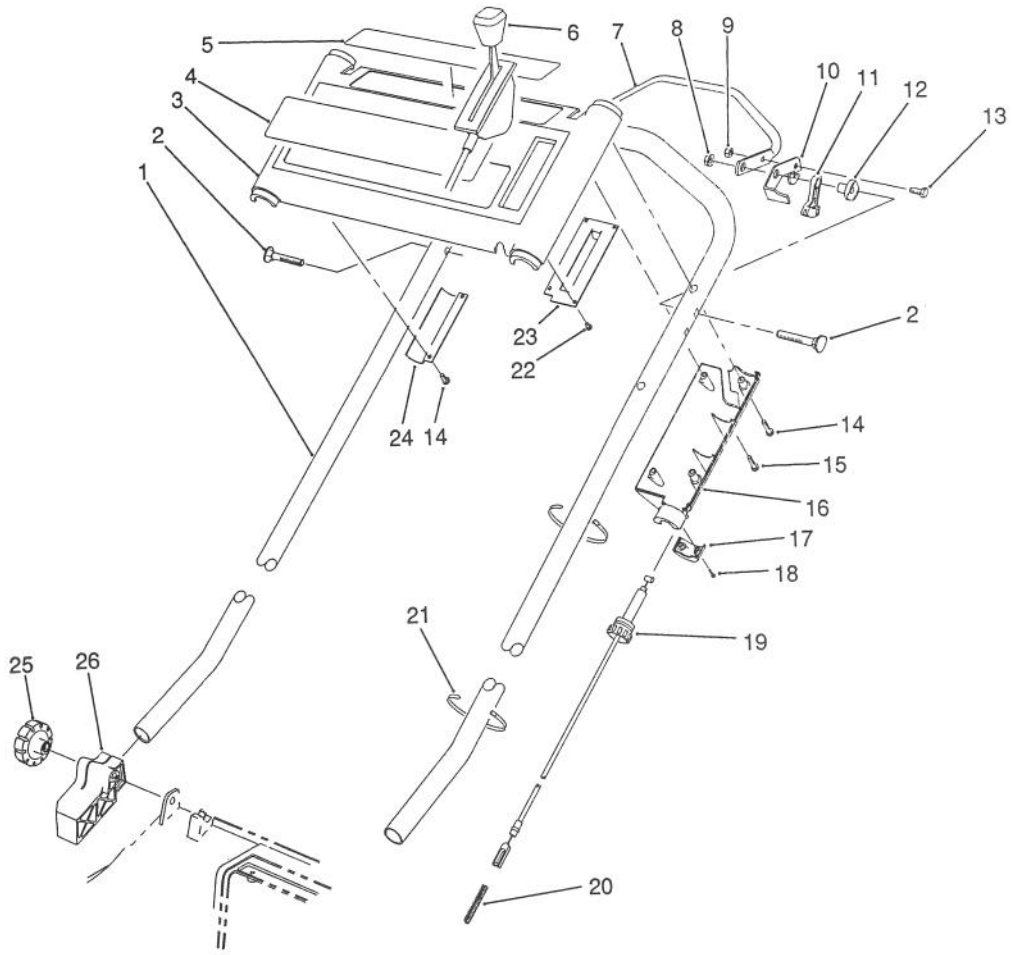

C-0367

S. P. HANDLE ASSEMBLY (Model No. 20916B)

Ref. No.	Part No.	Description	No. Used
1	71-8030	Handle	1
2	17-9426	Screw - Handle	2
3	14-0039	Panel - Control	1
4	71-8330	Decal - TORO Logo	1
5	71-8320	Decal - Danger	1
6	49-4186	Control - Throttle Bend Type #2 Sheath Lg. 42.00 Wire Lg. 2.50	1
7	46-9900	Bar - Control	1
8	3296-29	Nut - Flange Lock	2
9	3296-42	Nut - Lock	1
10	46-8800	Lever - Control	1
11	46-5520	Lever - Traction	1
12	66-0330	Support - Spacer	2

Ref. No.	Part No.	Description	No. Used
13	321-3	Screw - Cap Hex. Hd.	1
14	32144-97	Screw - Thread Forming	5
15	32104-121	Screw - Thread Forming	1
16	71-7680	Cover - Throttle Lower	1
17	71-7630	Cap - Throttle Lower	1
18	32144-99	Screw - Thread Forming	2
19	71-8110	Cable - Traction	1
20	71-8310	Spring - Gearbox Return	1
21	3290-378	Tie - Cable	2
22	32144-98	Screw - Thread Forming	4
23	71-8040	Plate - Throttle	1
24	71-8130	Bracket - Panel	1
25	19-4050	Knob - Handle	2
26	71-8090	Mount - Handle L.H.	1
*	71-8100	Mount - Handle R.H.	1

*Not Illustrated

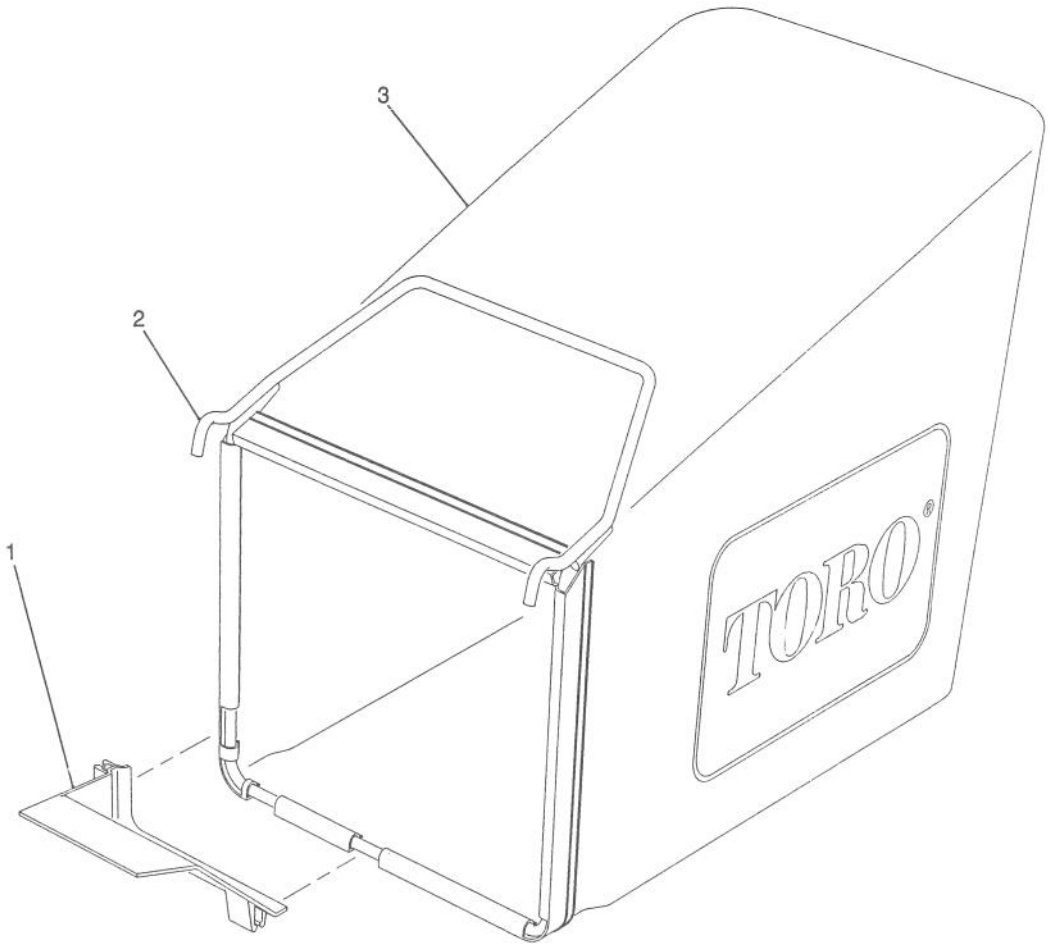

C-0368

GRASS BAG ASSEMBLY

Ref. No.	Part No.	Description	No. Used
1	71-3750	Ramp - Grass Bag	1
2	71-8180	Frame - Grass Bag (Model No. 20911)	1
*	71-9060	Frame - Grass Bag (Model No. 20916)	1

Ref. No.	Part No.	Description	No. Used
3	71-8270	Bag - Grass (Model No. 20911)	1
*	71-9050	Bag - Grass (Model No. 20916)	1

*Not Illustrated

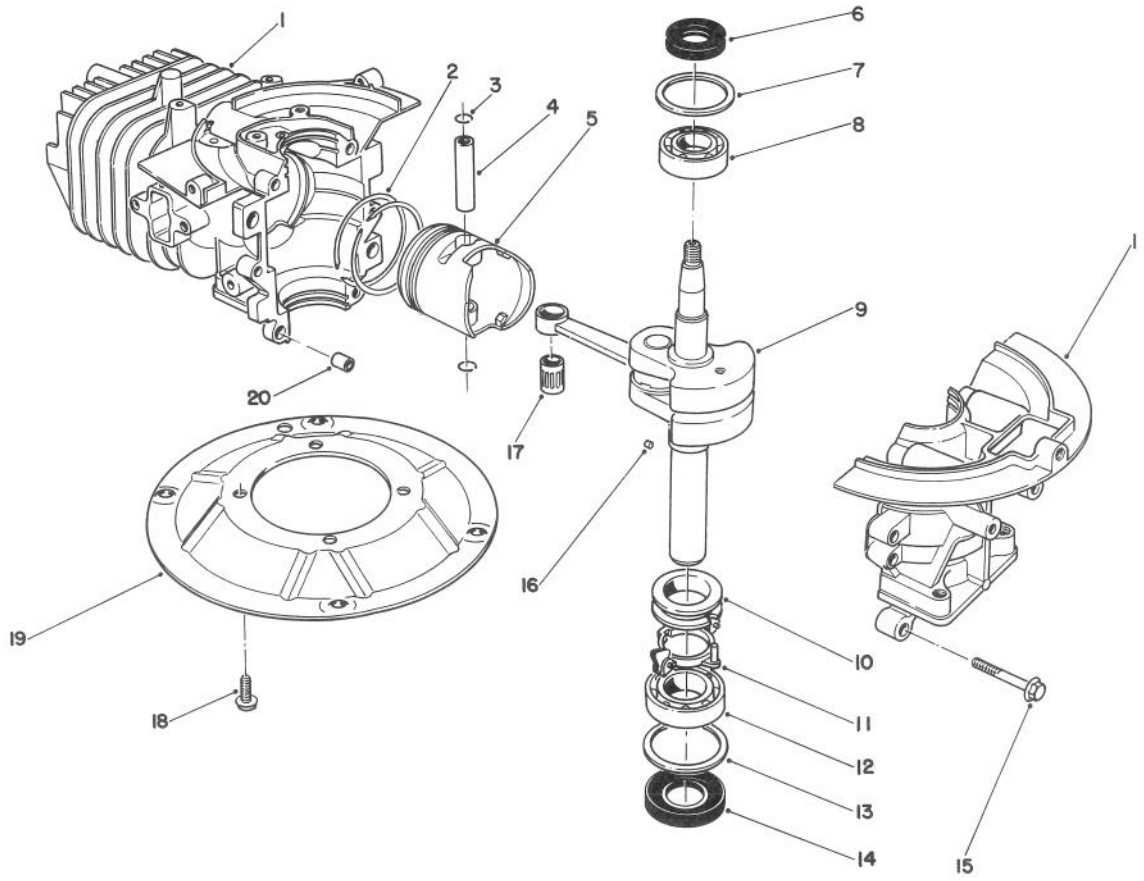

T-0663

CRANK SHAFT ASSEMBLY
(Model No. 47PL0-6)

Ref. No.	Part No.	Description	No. Used
1	81-2800	Crankcase/Cylinder Ass'y	1
2	81-0590	Ring Set	1
3	81-0620	Circlip	2
4	81-0600	Pin - Wrist	1
5	81-0580	Piston (58mm)	1
6	81-0720	Oil Seal - Upper	1
7	81-0710	Thrust Washer - Upper	1
8	81-0690	Bearing - Upper (20mm)	1
9	81-4600	Crankshaft/Connecting Rod Assembly	1
10	81-0770	Spacer - Governor	1

Ref. No.	Part No.	Description	No. Used
11	81-0750	Bracket - Governor Arm	1
12	81-0700	Bearing - Lower (25mm)	1
13	81-0730	Thrust Washer - Lower	1
14	81-0740	Oil Seal - Lower	1
15	81-0540	Bolt (30mm Lg.)	6
16	81-0760	Pin - Crankshaft	1
17	81-0610	Bearing - Wrist Pin	1
18	81-0570	Bolt (20mm Lg.)	4
19	81-0560	Plate - Mounting	1
20	81-0520	Pin - Crankcase	2
*	12-7699	Short Block Assembly	1

*Not Illustrated

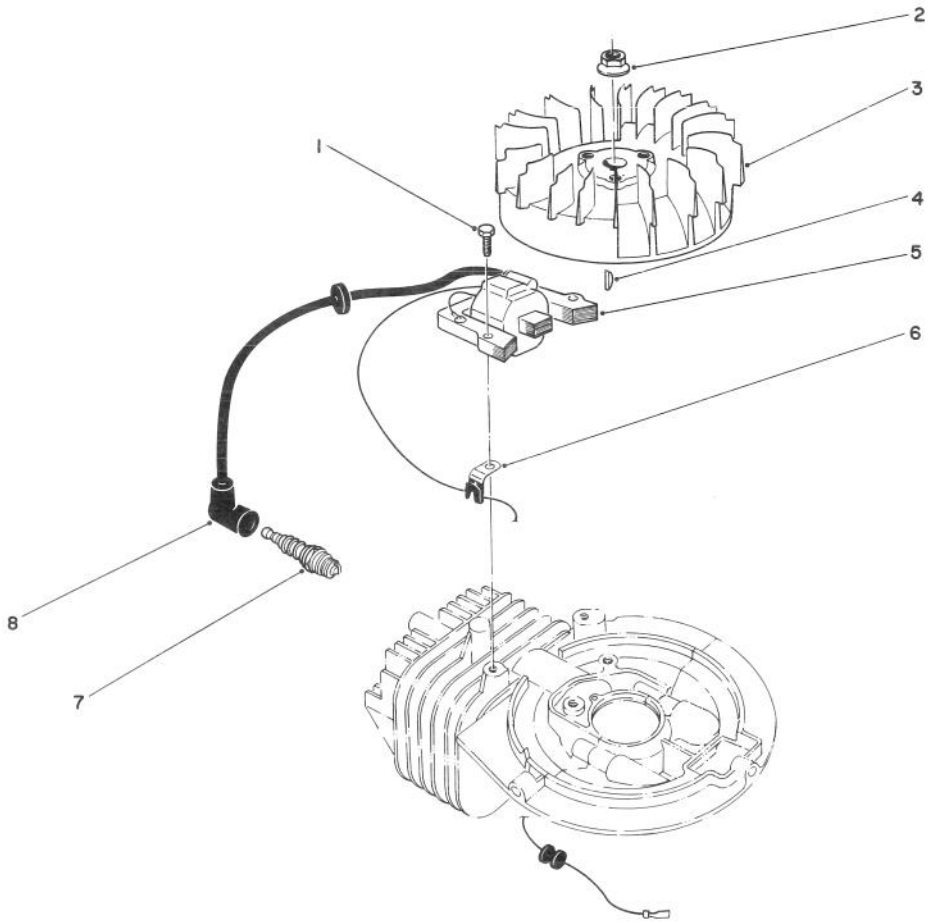

C–0176

IGNITION ASSEMBLY (Model No. 47PL0–6)

Ref. No.	Part No.	Description	No. Used
1	81–5680	Capscrew – Hex Hd.	2
2	81–1330	Nut	1
3	81–2810	Flywheel – Magneto	1
4	81–2370	Key – Flywheel	1
5	81–2820	Coil/Ignition Assembly	1
6	81–1480	Clamp	1
7	81–0181	Spark Plug	1
8	81–1500	Cover – Spark Plug	1
*	41–7650	Puller – Flywheel	1

*Not Illustrated

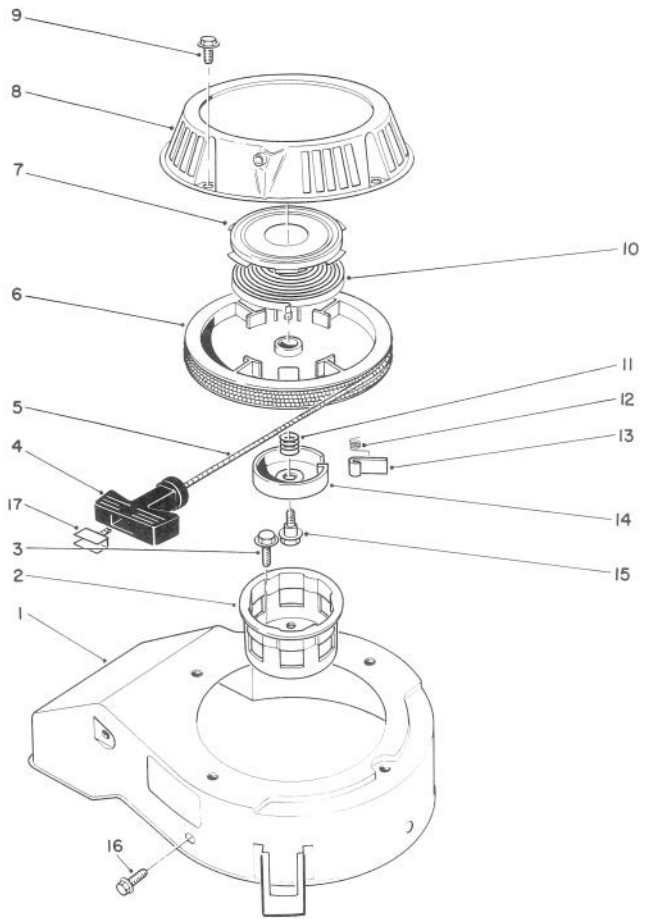

T-0668

RECOIL ASSEMBLY
(Model No. 47PL0-6)

Ref. No.	Part No.	Description	No. Used
1	81-2070	Cover - Cooling Fan	1
2	81-1290	Pulley - Starter Cup	1
3	81-1300	Bolt (16mm Lg.)	3
4	81-1630	Handle - Recoil	1
5	81-1270	Rope	1
6	81-1210	Reel - Rope Pulley	1
7		Retainer Cup - Recoil Spring	1
8	81-2090	Case - Recoil	1
9	81-1280	Bolt	4
10		Spring - Recoil	1
11	81-1240	Spring - Compression	1

Ref. No.	Part No.	Description	No. Used
12	81-1220	Spring - Dog	1
13	81-1230	Dog	1
14	81-1250	Retainer - Dog	1
15	81-1260	Bolt - Shoulder	1
16	53-1340	Bolt - Self Tapping	3
17	81-5760	Insert - Recoil Handle	1
*	81-2300	Spring & Retainer (Incl. Ref. #7 & 10)	1
*	81-5480	Starter Assembly (Incl. Ref. #4-8, & 10-15)	1

*Not Illustrated

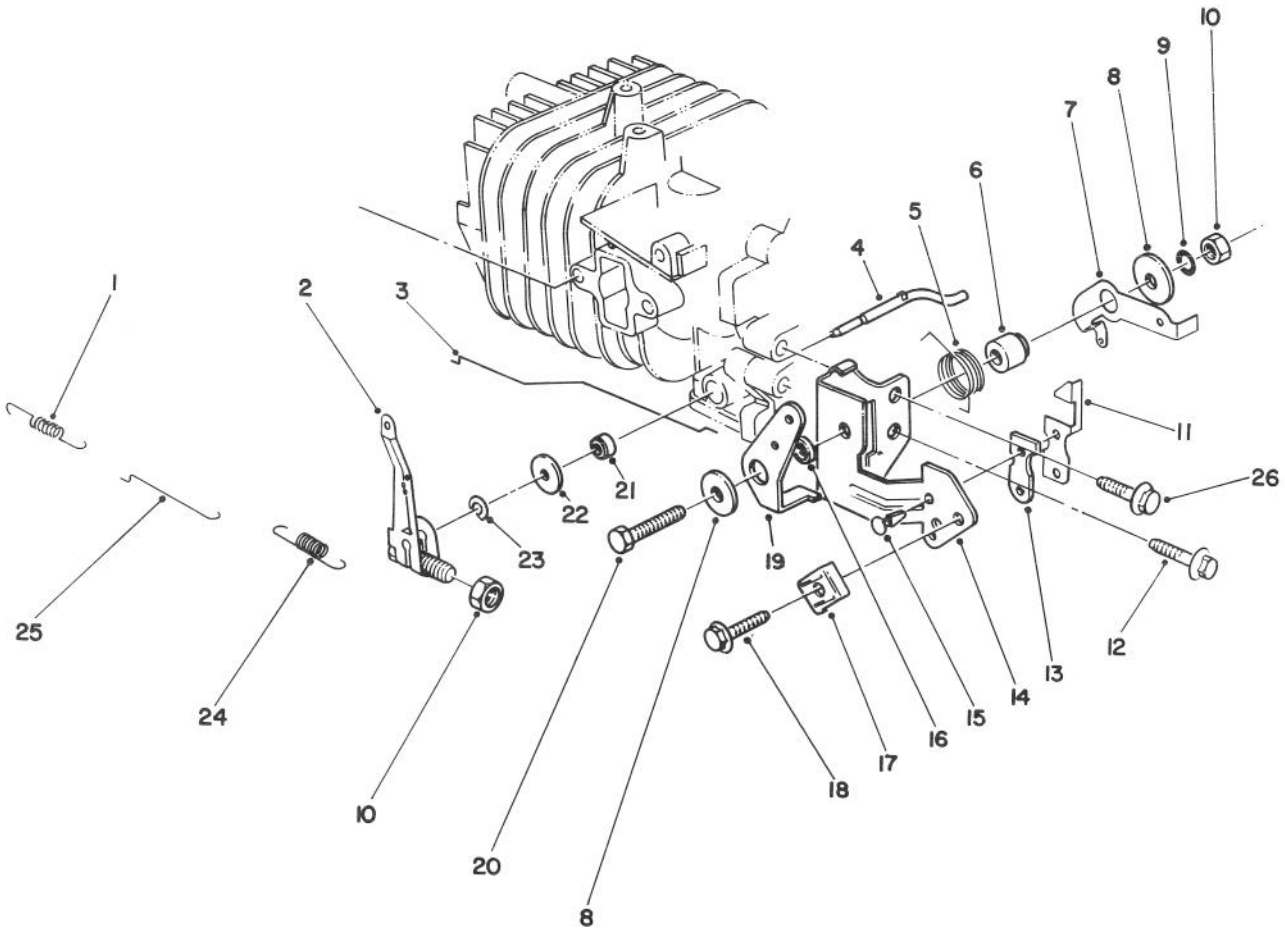

C-0177

GOVERNOR ASSEMBLY (Model No. 47PL0-6)

Ref. No.	Part No.	Description	No. Used
1	81-0920	Spring - Carburetor Rod	1
2	81-5420	Governor Arm/Bolt Ass'y	1
3	81-5410	Rod - Choke	1
4	81-0840	Shaft - Governor	1
5	81-2460	Spring - Choke Control Lever	1
6	81-1770	Spacer - Governor Spring Lever	1
7	81-2850	Lever - Governor Spring	1
8	81-1750	Washer - Choke Control Lever	2
9	81-1450	Washer - Lock	1
10	81-0900	Nut	2
11	81-1840	Terminal - Kill Switch	1
12	81-0540	Bolt - Self Tapping	1

Ref. No.	Part No.	Description	No. Used
13	81-1830	Insulator - Kill Switch	1
14	81-2420	Bracket - Throttle Control	1
15	81-4530	Rivet - Kill Switch	2
16	81-2470	Spacer - Choke Control Lever	1
17	81-2430	Clamp - Cable	1
18	50-0130	Bolt - Cable Clamp	1
19	81-1710	Lever - Choke Control	1
20	81-1730	Bolt - Throttle Control Brkt.	1
21	81-0850	Oil Seal - Governor Shaft	1
22	81-0860	Washer	1
23	81-0870	E-Ring	1
24	81-2830	Spring - Governor	1
25	81-0910	Rod - Carburetor	1
26	81-1170	Bolt - Self Tapping	1

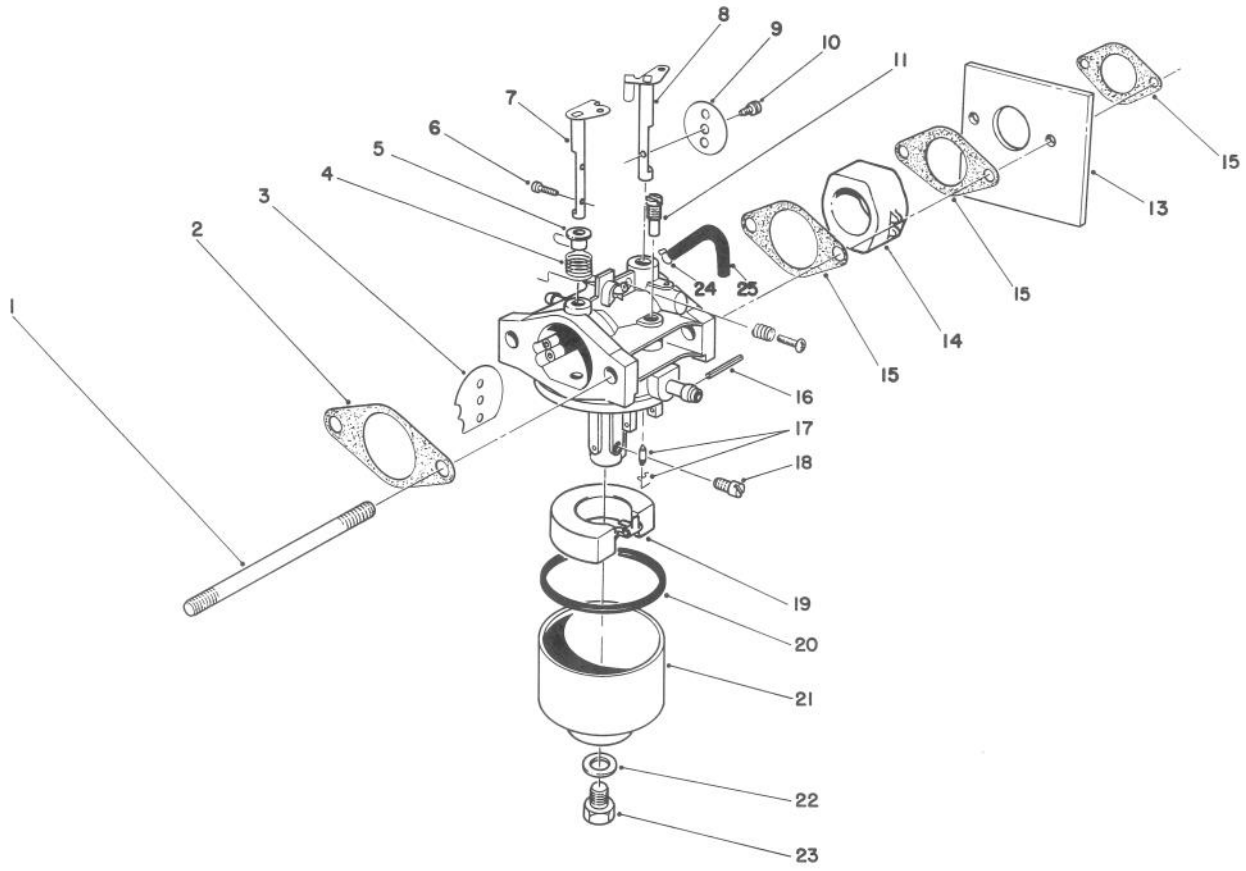

C-0191

CARBURETOR ASSEMBLY (Model No. 47PL0-6)

Ref. No.	Part No.	Description	No. Used
1	81-5450	Stud Bolt - Carburetor	2
2	81-0090	Gasket	2
3	81-0240	Valve - Choke	1
4	81-0230	Spring - Choke	1
5	81-0220	Bushing - Choke Valve	1
6	81-2160	Screw	2
7	81-1950	Shaft - Choke	1
8	81-0250	Shaft - Throttle	1
9	81-0260	Valve - Throttle	1
10	81-0270	Screw - Throttle Valve	1
11	81-1030	Jet - Pilot (#40)	1
13	81-5490	Shield - Carburetor	1
14	81-5440	Insulator - Carburetor	1
15	81-0780	Gasket	1
16	81-5600	Pin	1
17	81-4910	Needle Valve/Spring Wire	1

Ref. No.	Part No.	Description	No. Used
18	81-1060	Jet - Main (#75)	1
*	81-2340	Jet - Main (#72.5) High Alt., Above 6000 (Optional)	1
19	81-0970	Float	1
20	81-1010	Gasket - Float Bowl	1
21	81-5660	Bowl - Float	1
22	81-1020	Gasket - Bowl Screw	1
23	81-5670	Screw - Bowl	1
24	81-5460	Clamp - Vent Tube	1
25	81-5470	Tube - Vent	1
*	12-6379	Carburetor Kit (Incl. Ref. #2, 15, 17, 20, & 22)	1
*	81-5430	Carburetor Ass'y Complete	1

*Not Illustrated

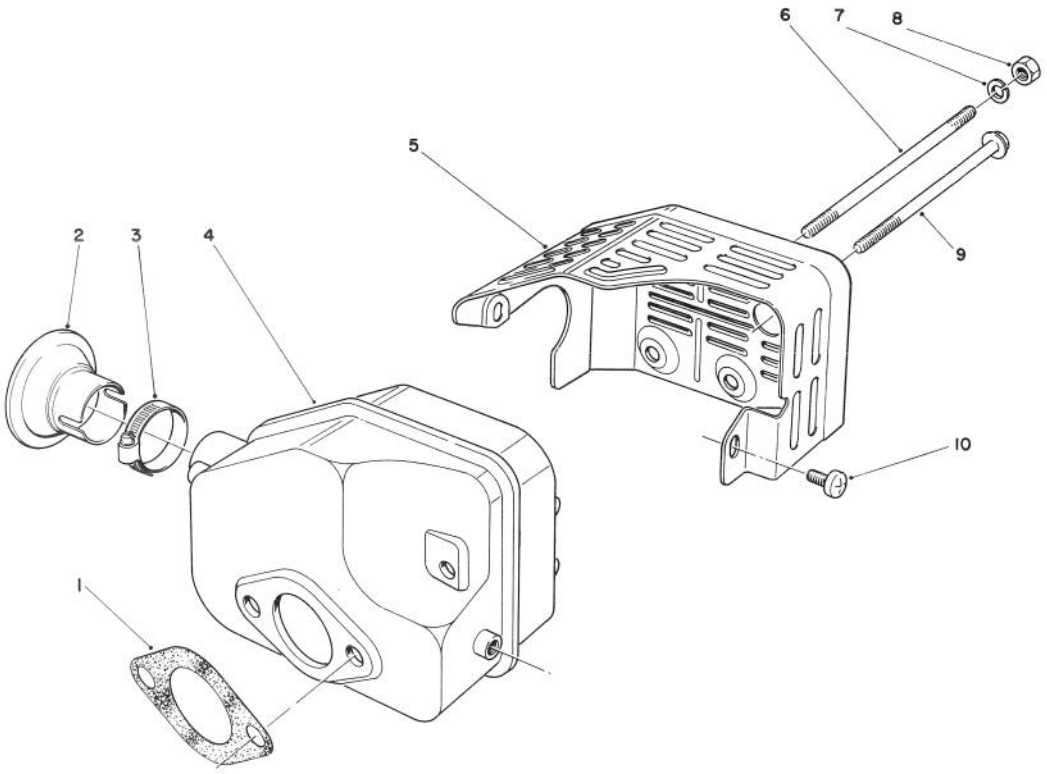

T-0667

MUFFLER ASSEMBLY
(Model No. 47PL0-6)

Ref. No.	Part No.	Description	No. Used
1	81-1080	Gasket - Muffler	1
*2	81-0200	Spark Arrester	1
†3		Clamp	1
4	81-5690	Muffler	1
5	81-2450	Cover - Muffler	1

Ref. No.	Part No.	Description	No. Used
6	81-1100	Bolt	2
7	81-1120	Washer - Lock	2
8	81-1110	Nut	2
9	81-1150	Bolt - Self Tapping	1
10	81-1140	Screw - Phillips Hd.	2

*Optional Equipment
†Obtain Locally