FORM NO. 3314-413

TORO®

MODEL NO. 20901B-1000001 & UP
MODEL NO. 20906B-1000001 & UP

PARTS CATALOG

48cm H. P. & S. P. REAR BAGGER

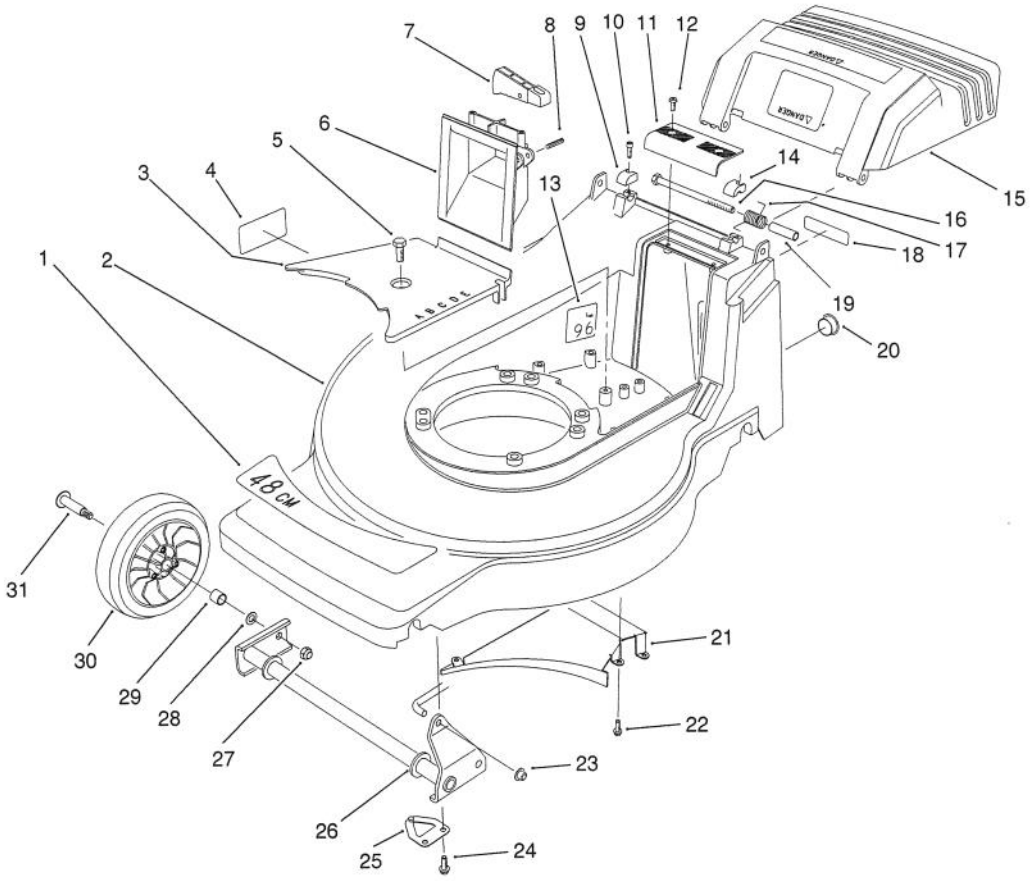

C-0635

HOUSING ASSEMBLY (Model No. 20901B)

Ref. No.	Part No.	Description	No. Used
1	71-8290	Decal - 48cm	1
2	14-0049	Housing - 48cm (Incl. Ref. #1, 4, & 13)	1
3	71-7920	Cover - Belt	1
4	62-3860	Decal - Danger	1
5	32144-70	Screw - Hex. Flange Hd.	1
6	71-7870	Grip - Lower	1
7	71-7930	Trigger - H.O.C.	1
8	3284-5	Pin - Roll	1
9	71-7910	Cap - Hinge Bolt R.H.	1
10	65-5210	Screw - Thread Forming	2
11	71-7860	Grip - Upper	1
12	32144-97	Screw - Thread Forming	2
13	66-1700	Decal - Noise Rating	1
14	71-7900	Cap - Hinge Bolt L.H.	1
15	71-8241	Door Discharge	1
16	322-29	Screw - Cap Hex. Hd.	2

Ref. No.	Part No.	Description	No. Used
17	71-8300	Spring - Door	2
18	66-0680	Decal - French Regulation	1
19	71-8580	Spacer - Door	2
20	2410-74	Plug - Hole	1
21	71-7990	Ramp - Discharge	1
22	49-2040	Screw - Thread Forming	4
23	32112-11	Nut - Push	1
24	11-9760	Screw - Thr'd Forming	4
25	71-7760	Plate - Suspension Front	2
26	71-7820	Pivot - Front	1
27	52-3620	Nut - Lock	2
28	40-1940	Washer - Wheel	2
29	27-6250	Bushing - Wheel	4
30	46-1113	Wheel & Tire Assembly (Incl. Ref. #29)	2
31	27-6230	Bolt - Wheel	2

©The TORO Company - 1990

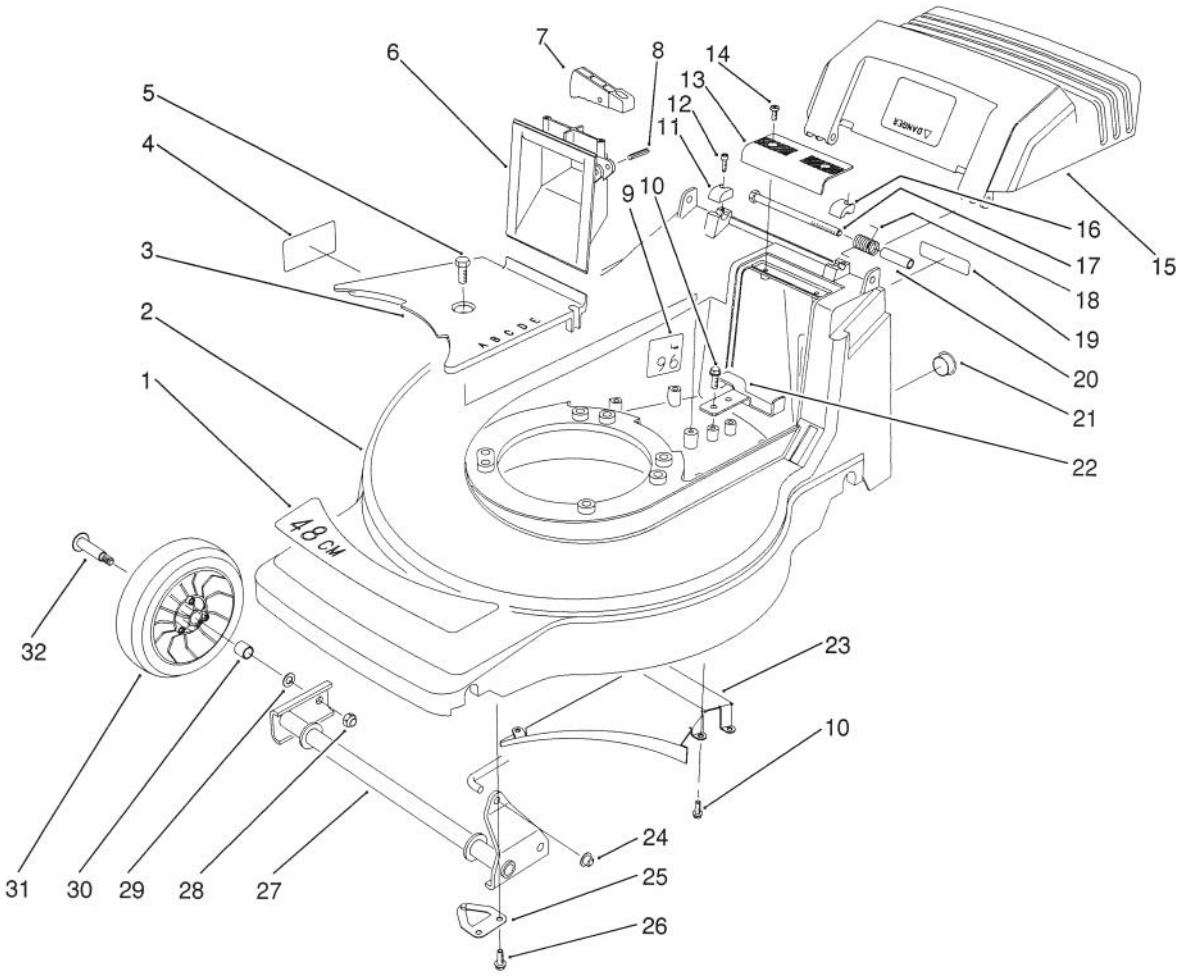

C-0633

HOUSING ASSEMBLY (MODEL NO. 20906B)

Ref. No.	Part No.	Description	No. Used
1	71-8290	Decal - 48cm	1
2	14-0049	Housing - 48cm	1
3	71-7920	Cover - Belt	1
4	62-3860	Decal - Danger	1
5	32144-70	Screw - Hex. Flange Hd.	1
6	71-7870	Grip - Lower	1
7	71-7930	Trigger - H.O.C.	1
8	3284-5	Pin - Roll	1
9	66-1700	Decal - Noise Rating	1
10	49-2040	Screw - Thread Forming	6
11	71-7910	Cap - Hinge Bolt R.H.	1
12	65-5210	Screw - Thread Forming	2
13	71-7860	Grip - Upper	1
14	32144-97	Screw - Thread Forming	2
15	71-8240	Door - Discharge	1
16	71-7900	Cap - Hinge Bolt L.H.	1
17	322-29	Screw - Cap Hex. Hd.	2

Ref. No.	Part No.	Description	No. Used
18	71-8300	Spring - Door	2
19	66-0680	Decal - French Regulation	1
20	71-8580	Spacer - Door	2
21	2410-74	Plug - Hole	1
22	71-7890	Guide - Belt Rear	1
23	71-7990	Ramp - Discharge	1
24	32112-11	Nut - Push	1
25	71-8830	Retainer - Shaft	2
26	11-9760	Screw - Thr'd Forming	4
27	71-7820	Pivot - Front	1
28	52-3620	Nut - Lock	2
29	40-1940	Washer - Wheel	2
30	27-6250	Bushing - Wheel	4
31	46-1113	Wheel & Tire Assembly (Incl. Ref. #30)	2
32	27-6230	Bolt - Wheel	2

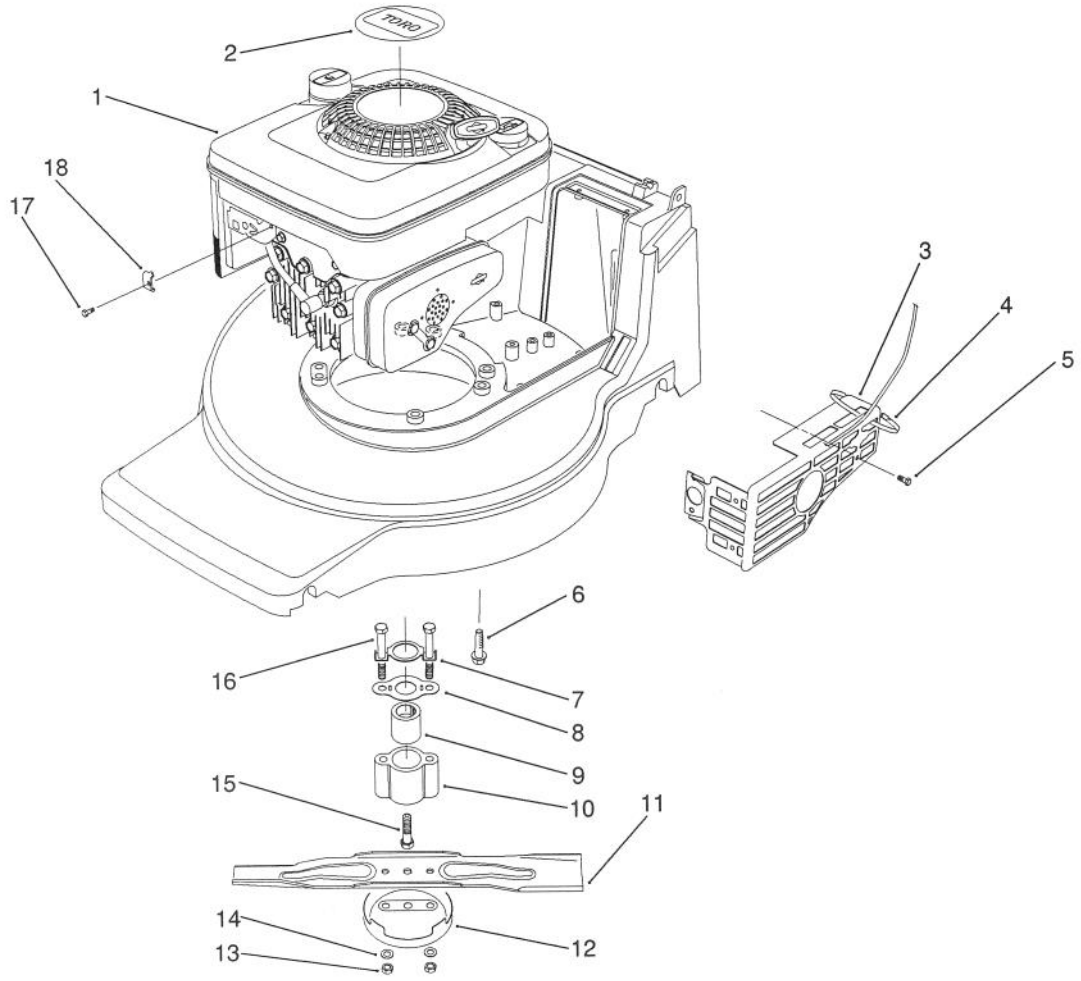

C-0636

ENGINE ASSEMBLY (Model No. 20901B)

Ref. No.	Part No.	Description	No. Used
1		Engine - B&S Quantum	1
2	71-8460	Decal - Engine	1
3	2210-317	Guard - Muffler	1
4	3290-378	Tie - Cable	1
5	2210-318	Screw - Muffler	2
6	11-0581	Bolt - Engine	3
7	71-9220	Retainer - Bracket	1
8	71-8840	Spring - Friction	2
9	71-8780	Hub - Crankshaft	1

Ref. No.	Part No.	Description	No. Used
10	71-8790	Retainer - Blade	1
11	71-8210	Blade - 48cm	1
12	42-0910	Cup - Anti-Scalp	1
13	52-3620	Nut - Lock	2
14	40-1940	Washer	2
15	71-8950	Screw - Crankshaft	1
16	71-8940	Screw - Blade	2
17	2210-313	Screw - Clamp	1
18	2210-249	Clamp - Cable	1

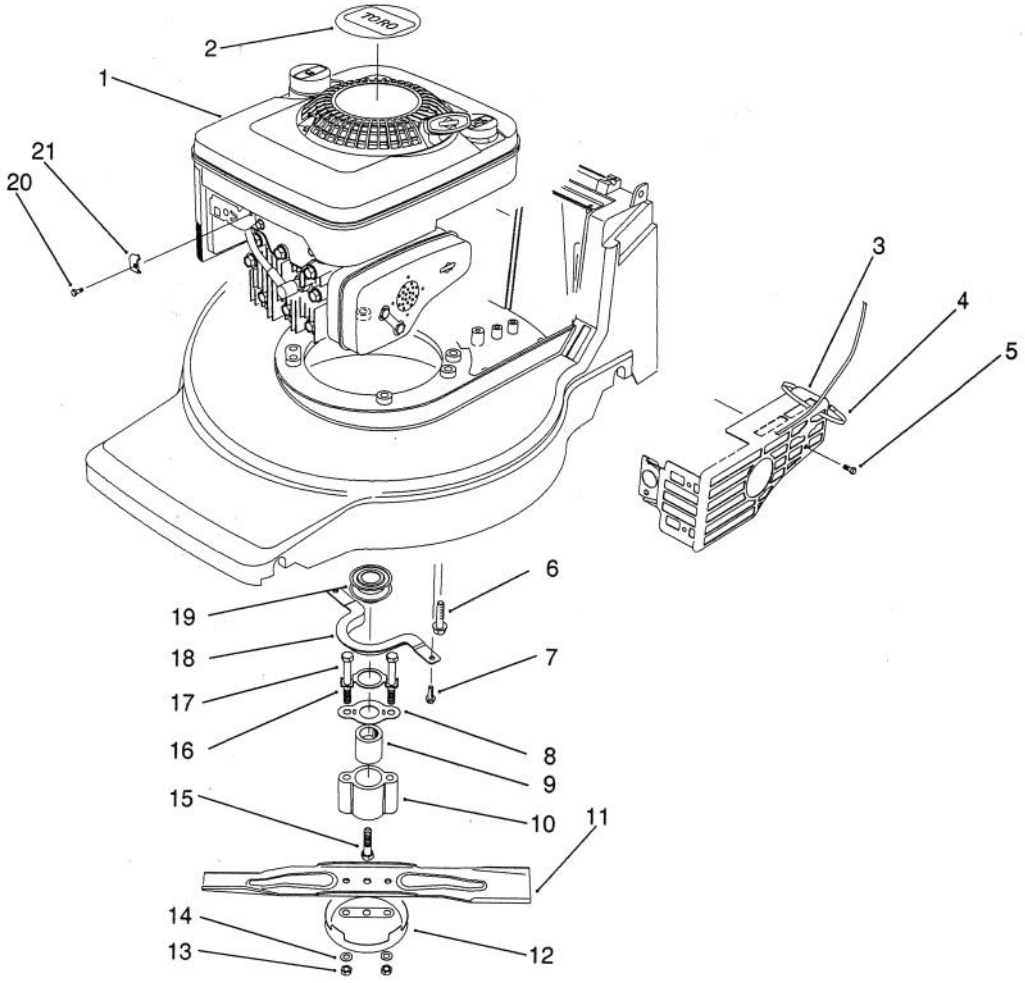

C-0637

ENGINE ASSEMBLY (Model No. 20906B)

Ref. No.	Part No.	Description	No. Used
1		Engine - B&S Quantum	1
2	71-8460	Decal - Engine	1
3	2210-317	Guard - Muffler	1
4	3290-378	Tie - Cable	1
5	2210-318	Screw - Muffler	2
6	11-0581	Bolt - Engine	3
7	32144-4	Screw - Thr'd Forming	2
8	71-8840	Spring - Friction	2
9	71-8780	Hub - Crankshaft	1
10	71-8790	Retainer - Blade	1
11	71-8210	Blade - 48cm	1

Ref. No.	Part No.	Description	No. Used
12	42-0910	Cup - Anti-Scalp	1
13	52-3620	Nut - Lock	2
14	40-1940	Washer	2
15	71-8950	Screw - Crankshaft	1
16	71-9220	Retainer - Bracket	1
17	71-8940	Screw - Blade	2
18	71-7960	Guide - Engine Belt	1
19	62-7550	Pulley - Driver	1
20	2210-313	Screw - Clamp	1
21	2210-249	Clamp - Cable	1

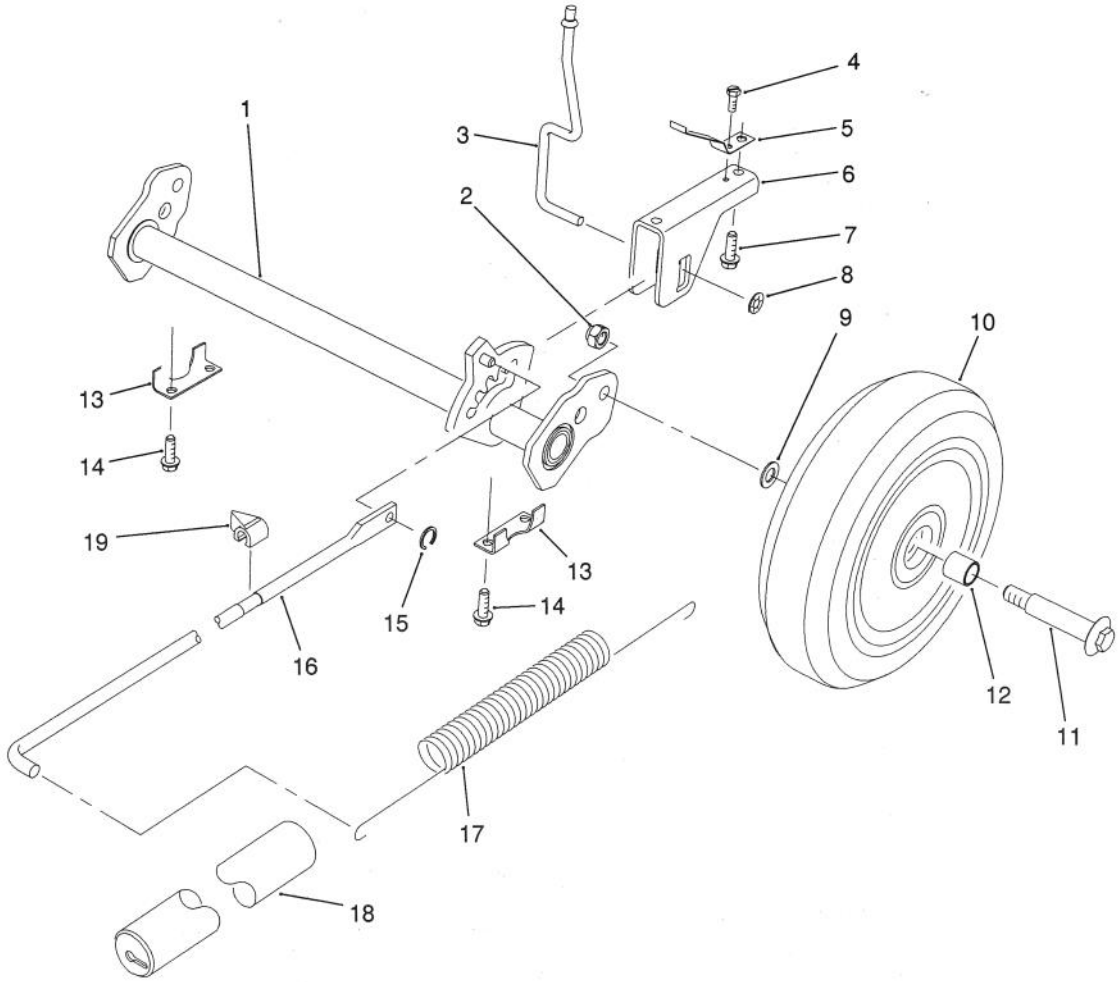

H. P. REAR AXLE ASSEMBLY (Model No. 20901B Only)

Ref. No.	Part No.	Description	No. Used
1	71-7800	Pivot - Rear H.P.	1
2	52-3620	Nut - Lock	2
3	71-7840	Rod - Trigger	1
4	32144-31	Screw - Thread Forming	1
5	71-8060	Spring - Trigger Return	2
6	71-8080	Saddle - H.O.C.	1
7	63-8590	Screw - Thread Forming	2
8	32112-13	Nut - Push	1
9	40-1940	Washer - Wheel	2
10	11-9509	Wheel & Tire Assembly (Incl. Ref. #12)	2

Ref. No.	Part No.	Description	No. Used
11	27-6230	Bolt - Wheel	2
12	27-6250	Bushing - Wheel	4
13	71-7770	Plate - Rear Suspension	2
14	49-2040	Screw - Thread Forming	4
15	32151-93	Ring - Grip	1
16	71-7970	Rod - Link	1
17	71-7740	Spring - Counterbalance	1
18	71-8450	Cover - Spring	1
19	71-7980	Indicator - H.O.C.	1

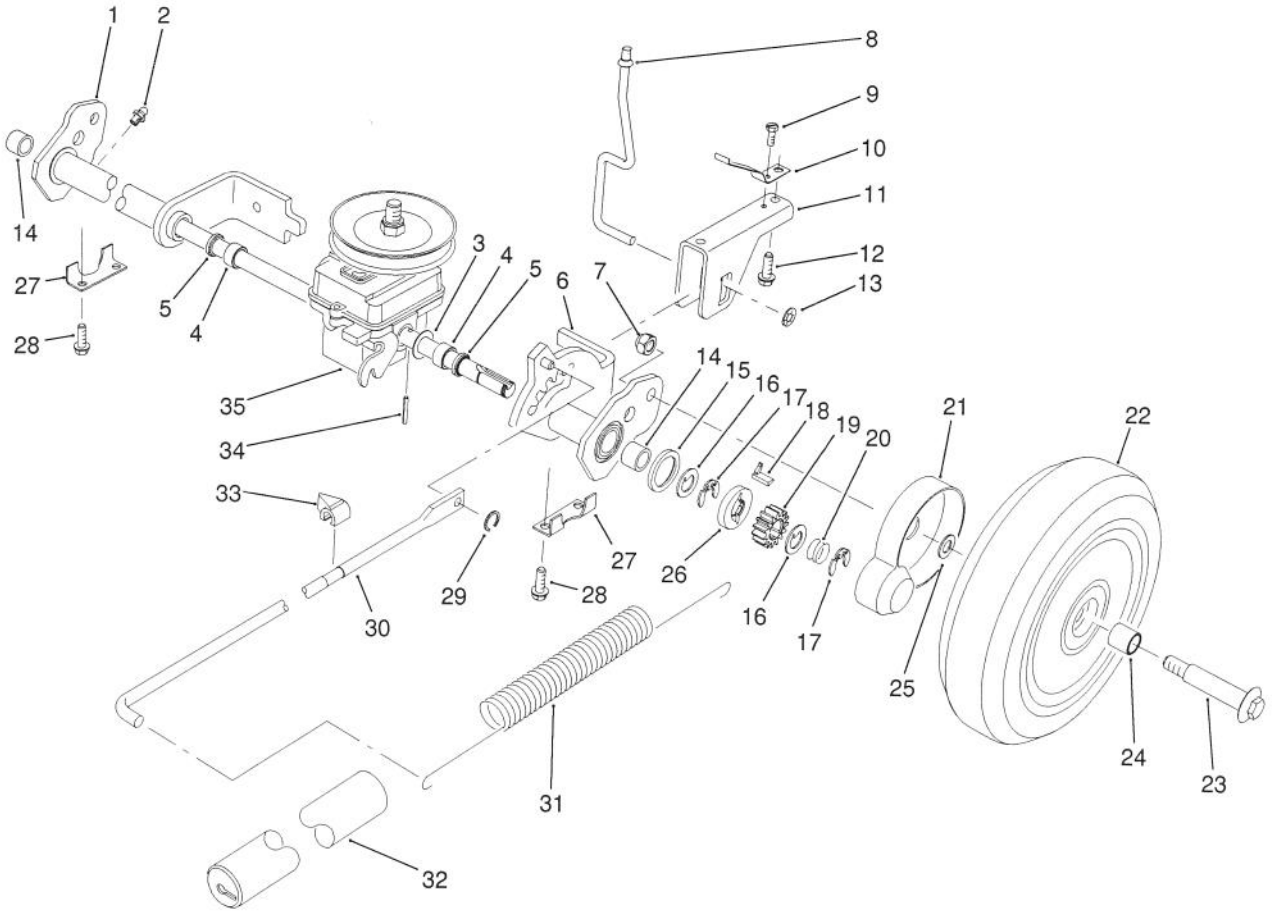

C-0364

S. P. REAR AXLE ASSEMBLY (Model No. 20906B Only)

Ref. No.	Part No.	Description	No. Used
1	71-8430	Rear Pivot Assembly R.H. (Incl. Ref. #2, 4, 5 & 14)	1
2	302-26	Fitting - Grease	2
3	36-4780	Washer	2
4	47-2890	Bushing - Sleeve	2
5	47-6730	Seal - Grease	2
6	71-8440	Rear Pivot Assembly L.H. (Incl. Ref. #2, 4, 5 & 14)	1
7	52-3620	Nut - Lock	2
8	71-7840	Rod - Trigger	1
9	32144-31	Screw - Thread Forming	1
10	71-8060	Spring - Trigger Return	2
11	71-8080	Saddle - H.O.C.	1
12	63-8590	Screw - Thread Forming	2
13	32112-13	Nut - Push	1
14	48-2060	Bearing - Needle	2
15	65-4710	Washer - Friction	2
16	65-4740	Washer - Keyed Thrust	4
17	65-2720	Ring - Retaining	4

Ref. No.	Part No.	Description	No. Used
18	66-6050	Key - Rocking L.H.	1
*	66-6040	Key - Rocking R.H.	1
19	65-4750	Gear - Pinion	2
20	65-4720	Spring - Compression	2
21	74-1660	Cover - Wheel	2
22	11-9519	Wheel, Tire & Gear Assy. (Incl. Ref. #24)	2
23	27-6230	Bolt - Wheel	2
24	27-6250	Bushing - Wheel	4
25	74-1670	Spacer - Wheel	2
26	65-4760	Washer - Clutch	2
27	71-7770	Plate - Rear Suspension	2
28	49-2040	Screw - Thread Forming	4
29	32151-93	Ring - Grip	1
30	71-7970	Rod - Link	1
31	71-7740	Spring - Counterbalance	1
32	71-8450	Cover - Spring	1
33	71-7980	Indicator - H.O.C.	1
34	32121-88	Pin - Roll	2
35	71-8250	Gearbox Assembly	1

*Not Illustrated

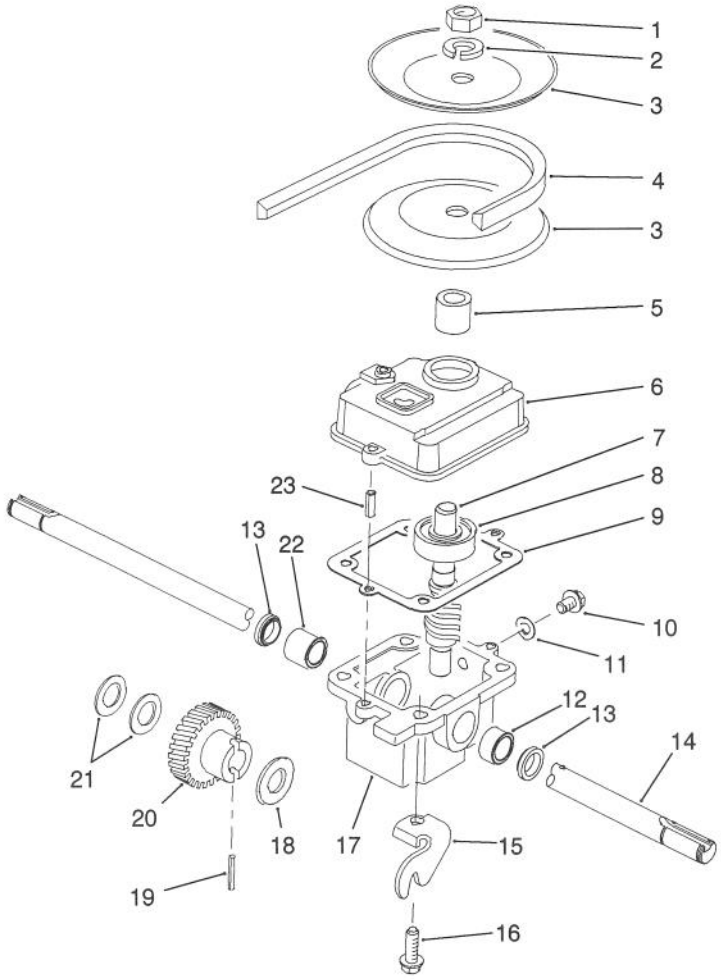

C-0365

GEARBOX ASSEMBLY NO. 71-8250
(Model No. 20906B Only)

Ref. No.	Part No.	Description	No. Used
1	3220-4	Nut - Jam	1
2	3253-6	Washer - Lock	1
3	71-7750	Pulley - Half	2
4	71-8500	Belt - V	1
5	71-7570	Spacer - Pulley	1
6	39-1103	Cover - Gearbox	1
7	71-8050	Shaft & Worm	1
8	47-7250	Bearing - Ball	1
9	36-1000	Gasket - Gearbox	1
10	28-1550	Screw - Drain	1
11	46-9640	Gasket - Drain Screw	1
12	47-2890	Bushing - Sleeve	1

Ref. No.	Part No.	Description	No. Used
13	47-6730	Seal - Oil	2
14	71-7880	Shaft - Output	1
15	71-8120	Bracket - Traction	1
16	49-2040	Screw - Thread Forming	4
17	33-2061	Case - Gearbox	1
18	3-0724	Washer - Thrust	1
19	32121-120	Pin - Roll	1
20	71-8140	Gear - Helical	1
21	36-4780	Washer - Thrust	2
22	47-2900	Bushing - Sleeve	1
23	32121-1	Pin - Roll	2

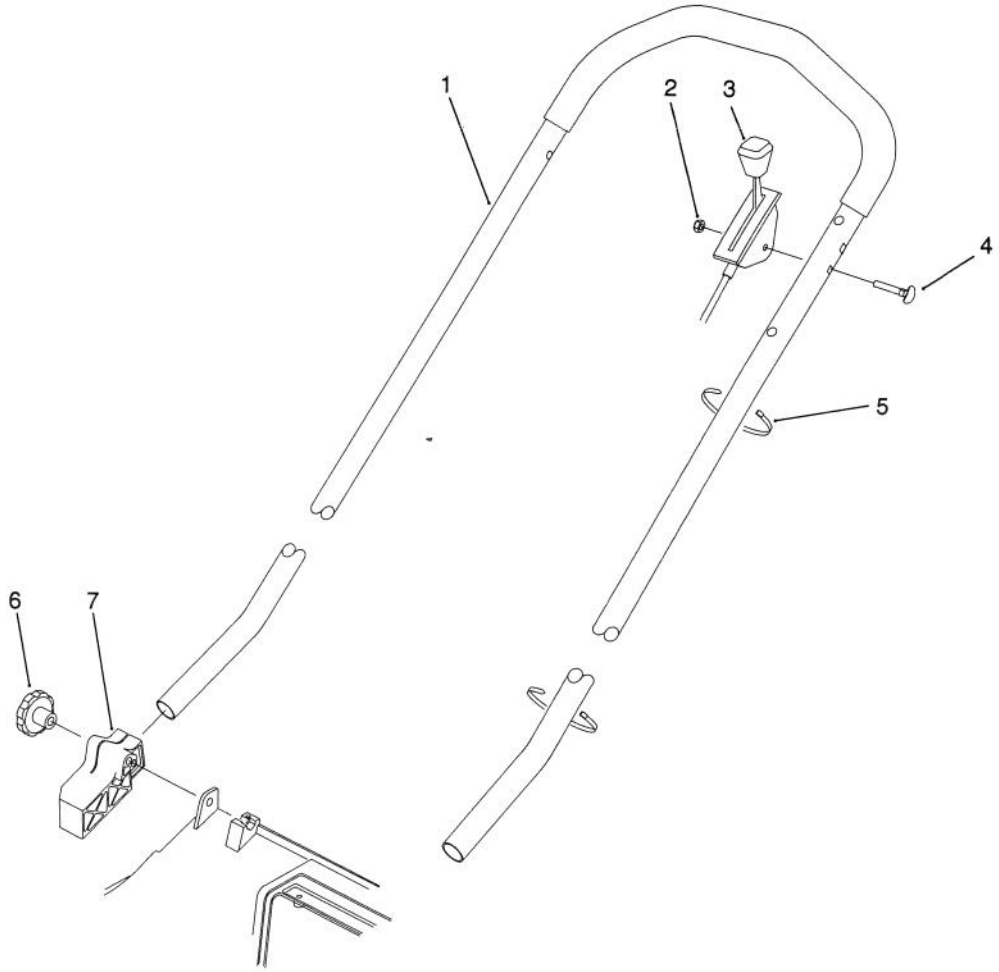

C-0366

H. P. HANDLE ASSEMBLY (Model No. 20901B Only)

Ref. No.	Part No.	Description	No. Used
1	71-9020	Handle	1
2	3296-56	Nut - Lock	1
3	71-8380	Control - Throttle Bend Type #1 Sheath Lg. 57.50 Wire Lg. 2 1/2	1

Ref. No.	Part No.	Description	No. Used
4	46-6430	Screw - Cap Hex. Hd.	1
5	3290-378	Tie - Cable	2
6	19-4050	Knob - Handle	2
7	71-8100	Mount - Handle R.H.	1
*	71-8090	Mount - Handle L.H.	1

*Not Illustrated

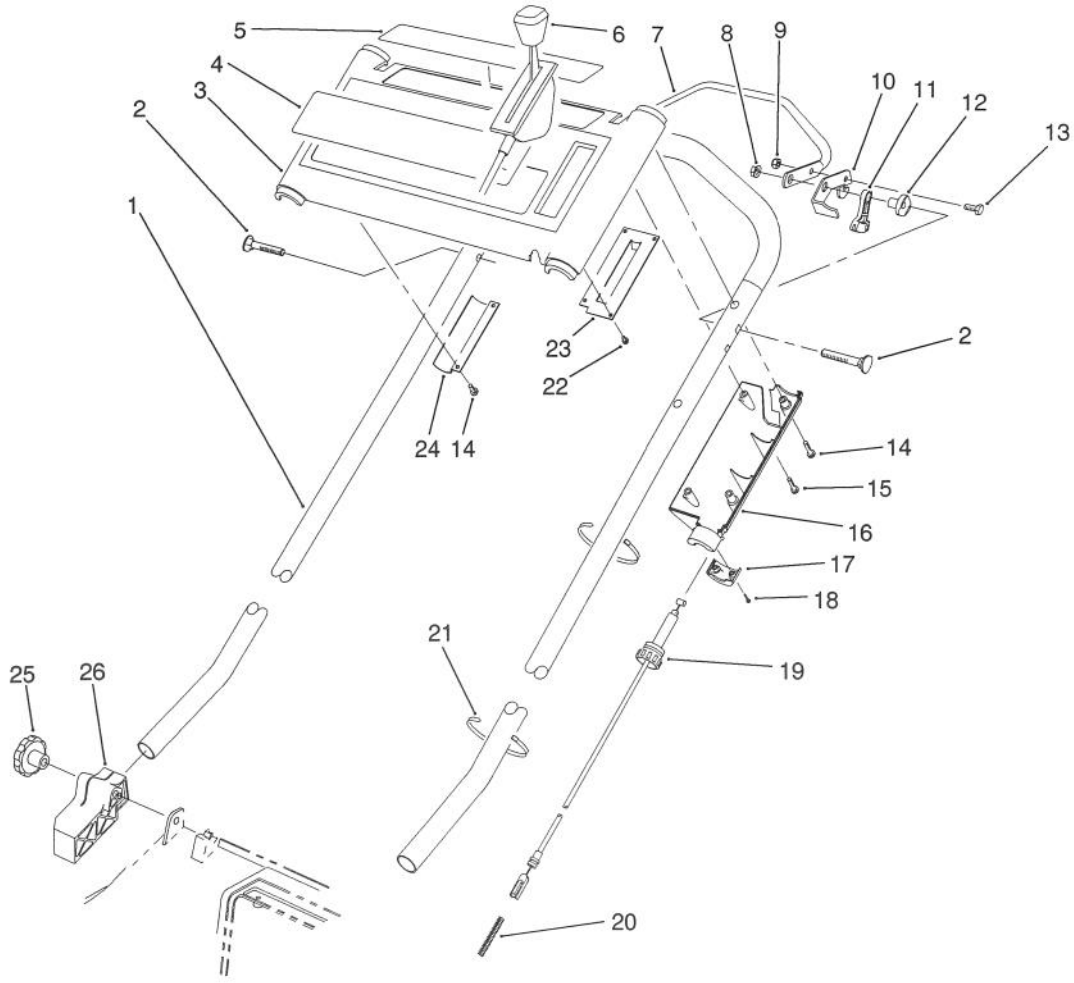

C-0367

S. P. HANDLE ASSEMBLY (Model No. 20906B Only)

Ref. No.	Part No.	Description	No. Used
1	71-9020	Handle	1
2	17-9426	Screw - Handle	2
3	14-0039	Panel - Control (Incl. Ref. #4 & 5)	1
4	71-8330	Decal - TORO Logo	1
5	71-8320	Decal - Danger	1
6	66-0235	Control - Throttle Bend Type #1 Sheath Lg. 55.50 Wire Lg. 2 1/2	1
7	46-9900	Bar - Control	1
8	3296-29	Nut - Flange Lock	2
9	3296-42	Nut - Lock	1
10	46-8800	Lever - Control	1
11	46-5520	Lever - Traction	1
12	66-0330	Support - Spacer	2

Ref. No.	Part No.	Description	No. Used
13	321-3	Screw - Cap Hex. Hd.	1
14	32144-97	Screw - Thread Forming	5
15	32104-121	Screw - Thread Forming	1
16	71-7680	Cover - Throttle Lower	1
17	71-7630	Cap - Throttle Lower	1
18	32144-99	Screw - Thread Forming	2
19	71-8110	Cable - Traction	1
20	71-8310	Spring - Gearbox Return	1
21	3290-378	Tie - Cable	2
22	32144-98	Screw - Thread Forming	4
23	71-8040	Plate - Throttle	1
24	71-8130	Bracket - Panel	1
25	19-4050	Knob - Handle	2
26	71-8100	Mount - Handle R.H.	1
*	71-8090	Mount - Handle L.H.	1

*Not Illustrated

ENGINE BRIGGS & STRATTON MODEL 122702-0182-01

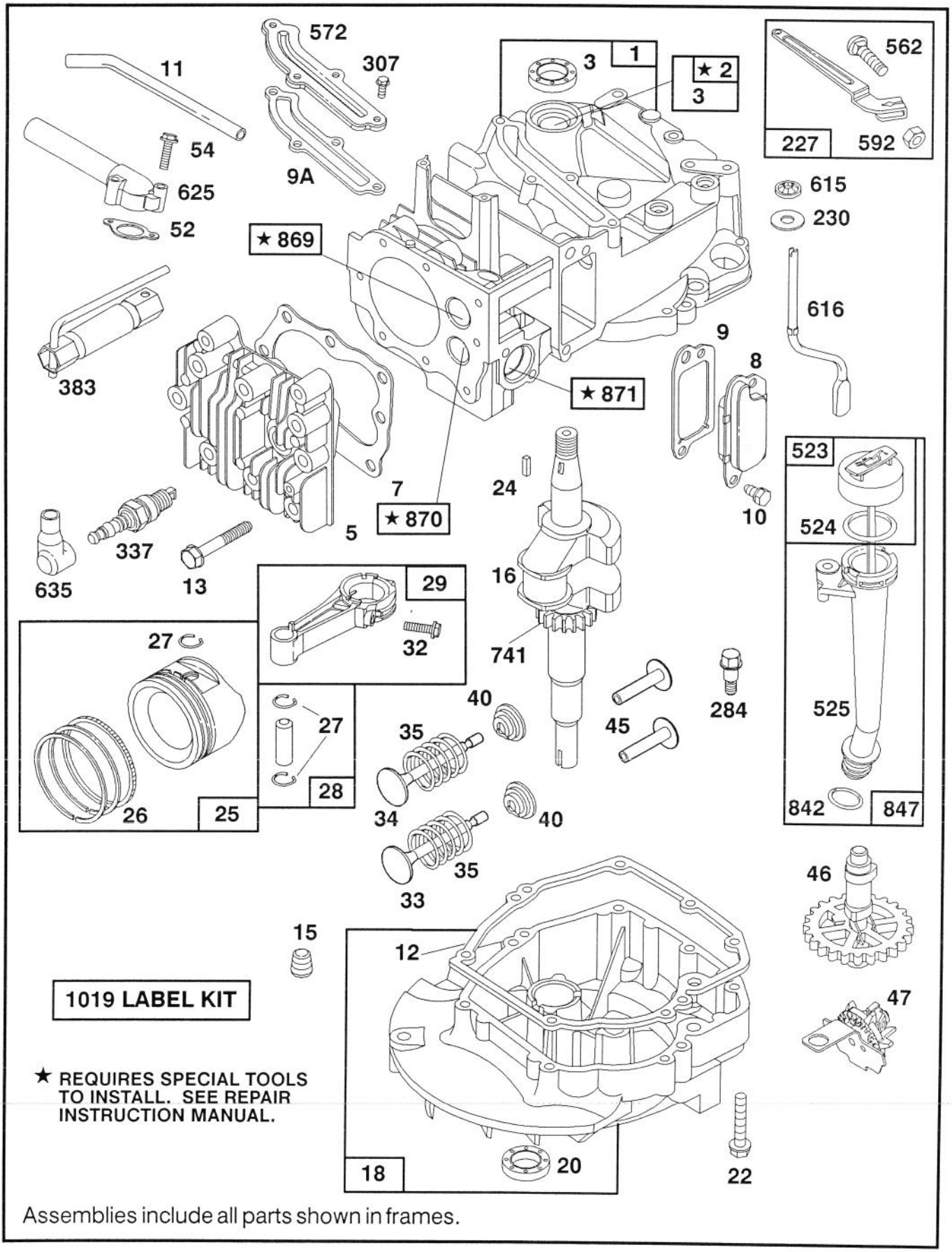

Assemblies include all parts shown in frames.

ENGINE BRIGGS & STRATTON MODEL 122702-0182-01

Ref. No.	Part No.	Description	No. Used
1	493260	Cylinder Assembly	1
2	293708	Bushing-Cylinder Note: Requires special tools for installation.	1
*3	393862	Seal-Oil	1
5	213861	Head-Cylinder	1
*7	272200	Gasket-Cylinder Hd.	1
8	399717	Breather-Valve Chamber	1
*9	271904	Gasket-Valve Cover	1
*9A	272238	Gasket-Baffle Plate	1
10	94222	Mounting Sem	1
11	231685	Tube-Breather	1
*12	272198	Gasket-Crankcase	1
13	94547	Screw-Cylinder Hd.	1
15	93418	Plug-Oil Drain	1
16	493429	Crankshaft Note: Order 94388 For Timing Gear Key	1
18	493279	Sump-Engine	1
*20	399781	Seal-Oil	1
22	94220	Screw-Sump Mtg. Sem Note: 94612 Screw-Hex. Hd. (Use One (1) in Hole Nearest to Breather).	1
24	222698	Key-Flywheel	1
25	493262	Piston Assy.-Standard	1
	493385	Piston Assy.-.010" O.S.	1
	493386	Piston Assy.-.020" O.S.	1
	493387	Piston Assy.-.030" O.S.	1
		PISTON RING SETS: Note: For Chrome Piston Ring Set-Standard Size Order Part No. 493391.	1
26	493261	Ring Set-Std. Piston	1
	493388	Ring Set-.010" O.S. Piston	1
	493389	Ring Set-.020" O.S. Piston	1
	493390	Ring Set-.030" O.S. Piston	
27	26026	Lock-Piston Pin	1
28	298909	Pin Assembly-Piston-Standard	1
	298908	Pin Assembly-Piston-.005" O.S.	1

Ref. No.	Part No.	Description	No. Used
29	490566	Rod Assembly- Connecting Note:For Connecting Rod with.020" Undersize Crankpin Bearing- Order No. 490743.	1
32	94405	Screw-Connecting Rod	1
33	262651	Valve-Exhaust	1
34	262652	Valve-Intake	1
35	262224	Spring-Valve	1
40	93312	Retainer-Valve Spring	1
45	262204	Tappet-Valve	1
46	492828	Gear-Cam	1
47	493737	Oil Slinger Gear and Brkt.	1
*52	272199	Gasket-Intake Elbow	1
54	94526	Screw-Intake Elbow Mtg.	1
227	492349	Lever Assembly-Gov.	1
230	67072	Washer-Governor Crank	1
284	94511	Screw-Hex. Head	1
307	94515	Screw-Hex. Head	1
337	802592	Plug-Spark	1
383	89838	Wrench-Spark Plug	1
523	493950	Cap with Dipstick-Oil Filler	1
524	280393	Seal-Filler Tube	1
525	493952	Tube-Oil Filler	1
562	92613	Bolt-Governor Lever	1
572	224328	Baffle-Cylinder	1
592	231082	Nut-Hex.	1
615	94474	Pushnut (Governor Crank)	1
616	262578	Crank-Governor	1
625	492717	Tube-Fuel Intake	1
635	66538	Elbow-Spark Plug	1
741	262598	Gear-Timing	1
842	280966	Seal-O-Ring	1
847	493459	Oil Fill Tube and Dipstick Assy.	1
869	213512	Seat-Intake Valve	1
870	213513	Seat-Exhaust Valve	1
871	262001	Guide-Exhaust Valve Note: 63709 Guide- Intake Valve See Repair Instruction Manual.	1
1019	494256	Label Kit	1

ENGINE BRIGGS & STRATTON MODEL 122702-0182-01

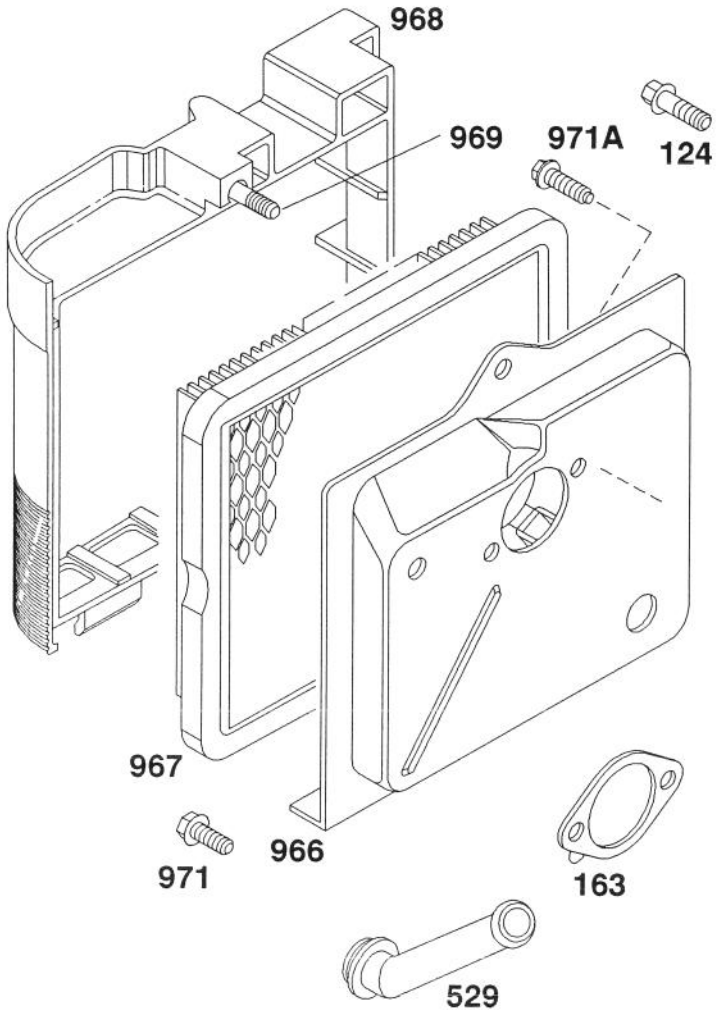

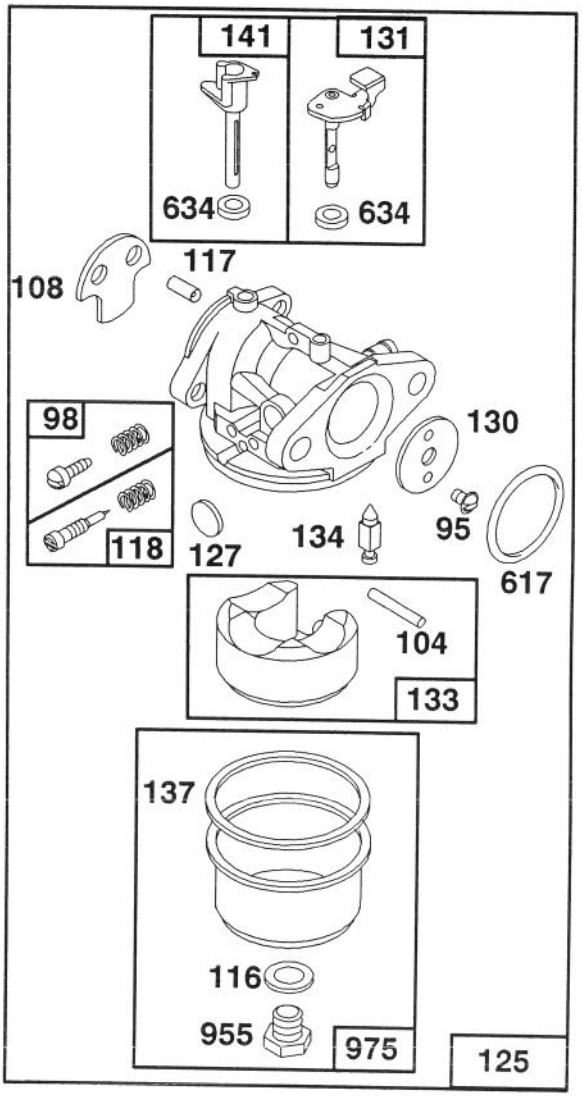

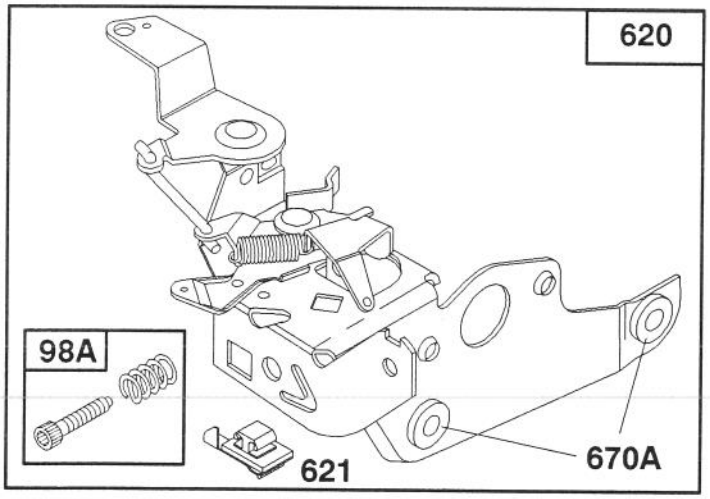

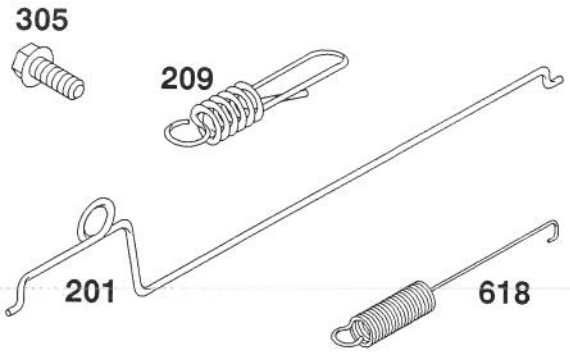

Assemblies include all parts shown in frames.

ENGINE BRIGGS & STRATTON MODEL 122702-0182-01

Ref. No.	Part No.	Description	No. Used
95	94098	Screw-Throttle Valve Mounting Sem	1
98	398185	Screw-Idle Adjustment	1
98A	493280	Screw Assy.-Speed Adj.	1
●104	231371	Pin-Float Hinge	1
108	223471	Valve-Choke	1
●◆116		Gasket-Sealing (Sold in Kit Only)	1
●117		Jet (Sold in Kit Only)	1
118	493765	Valve and Spring- Needle	1
124	94525	Screw-Carburetor Mtg.	1
125	494216	Carburetor Assembly	1
●127		Plug-Welch (Sold in Kit Only)	1
130	223470	Valve-Throttle	1
131	493267	Shaft and Lever- Throttle	1
133	398187	Float Assy.-Carburetor	1
●134	398188	Valve-Inlet (Includes Seat)	1
●◆137		Gasket-Bowl (Sold in Kit Only)	1
141	494218	Shaft-Choke	1

Ref. No.	Part No.	Description	No. Used
★163	272296	Gasket-Air Cleaner	1
201	262579	Link-Governor	1
209	262661	Spring-Governor	1
305	94513	Screw-Hex. Head Sem	1
529	280943	Grommet-Breather	1
●◆617	270344	Seal-Fuel Intake Tube	1
618	262749	Spring-Choke Return	1
620	493894	Bracket Assembly- Carburetor Control	1
621	396847	Switch-Stop	1
●◆634		Washer-Shaft (Sold in Kit Only)	1
670A	493823	Spacer-Carburetor Bracket	1
955	493763	Screw-Bowl Mtg.	1
966	492363	Base-Air Cleaner	1
967	491588	Filter-Air	1
968	281069	Cover-Air Cleaner	1
969	94120	Screw-Cover Mtg.	1
971	94269	Screw-Air Cleaner	1
971A	94121	Screw-Base to Carburetor	1
975	493640	Bowl Assembly- Carburetor	1

ENGINE BRIGGS & STRATTON MODEL 122702-0182-01

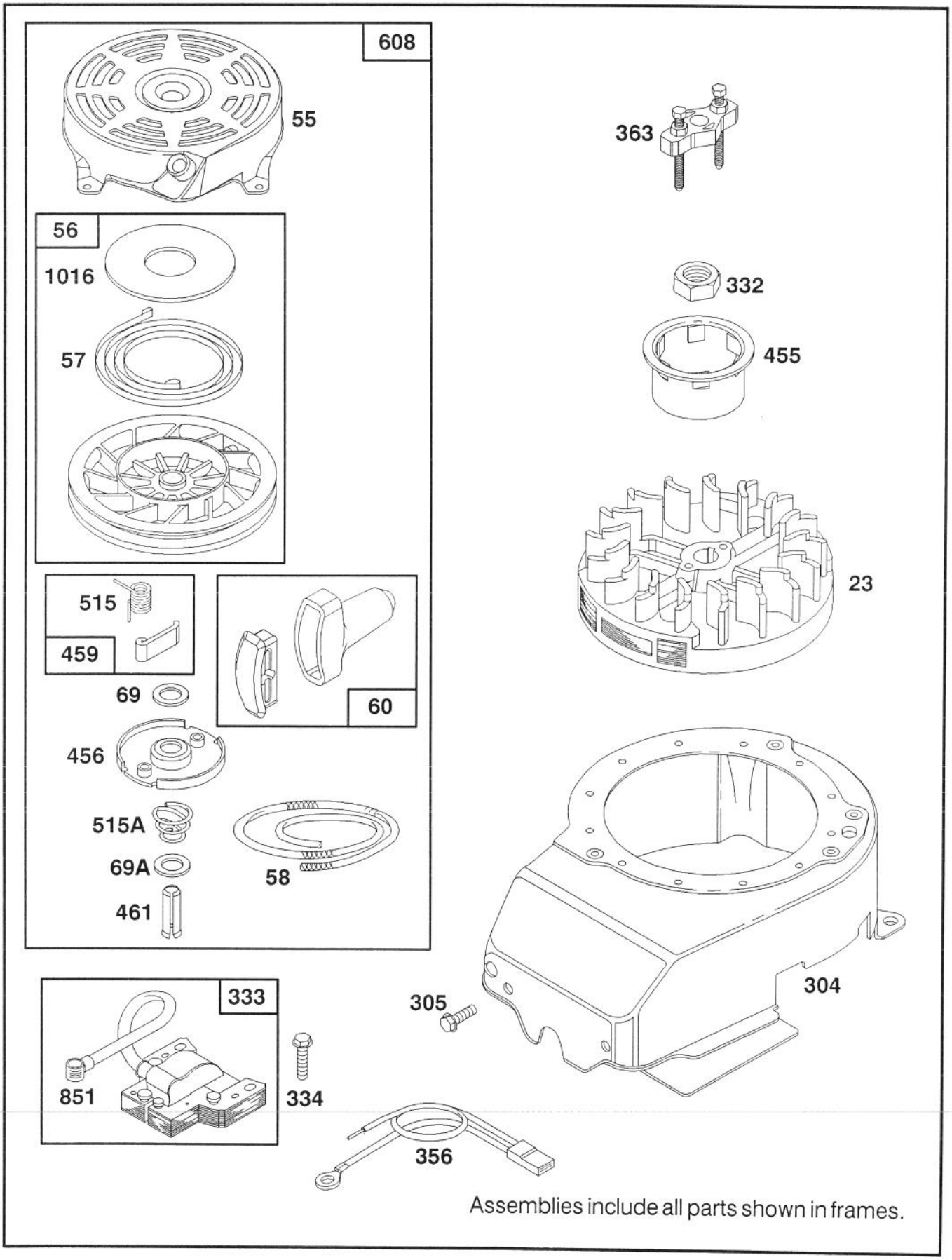

Assemblies include all parts shown in frames.

ENGINE BRIGGS & STRATTON MODEL 122702-0182-01

Ref. No.	Part No.	Description	No. Used
23	492177	Flywheel-Magneto	1
55	492831	Housing-Rewind Starter	1
56	492832	Pulley-Rewind Starter	1
57	262594	Spring-Rewind Starter	1
58	280399	Rope-Rewind Starter (Cut To 88-5/8")	1
60	393152	Handle-Rewind Starter	1
69	280973	Washer-Rewind Starter	1
69A	224322	Washer-Rewind Starter	1
304	493294	Housing-Blower	1
305	94513	Screw-Hex. Head Sem	1
332	92284	Nut-Flywheel	1
333	802574	Armature-Magneto	1
334	93381	Screw-Armature Mounting Sem	1 1

Ref. No.	Part No.	Description	No. Used
356	398808	Wire-Ground	1
363	19069	Puller-Flywheel (Optional Accessory)	1
455	224250	Cup-Starter	1
456	224321	Retainer-Rewind Starter	1
459	492833	Pawl-Starter	1
461	262626	Pin-Starter	1
515	262556	Spring-Pawl	1
515A	262625	Spring-Torsion	1
608	493295	Starter Assy.-Rewind	1
851	221798	Terminal-Ignition Cable	1
1016	224278	Cover-Rewind Starte	1

ENGINE BRIGGS & STRATTON MODEL 122702-0182-01

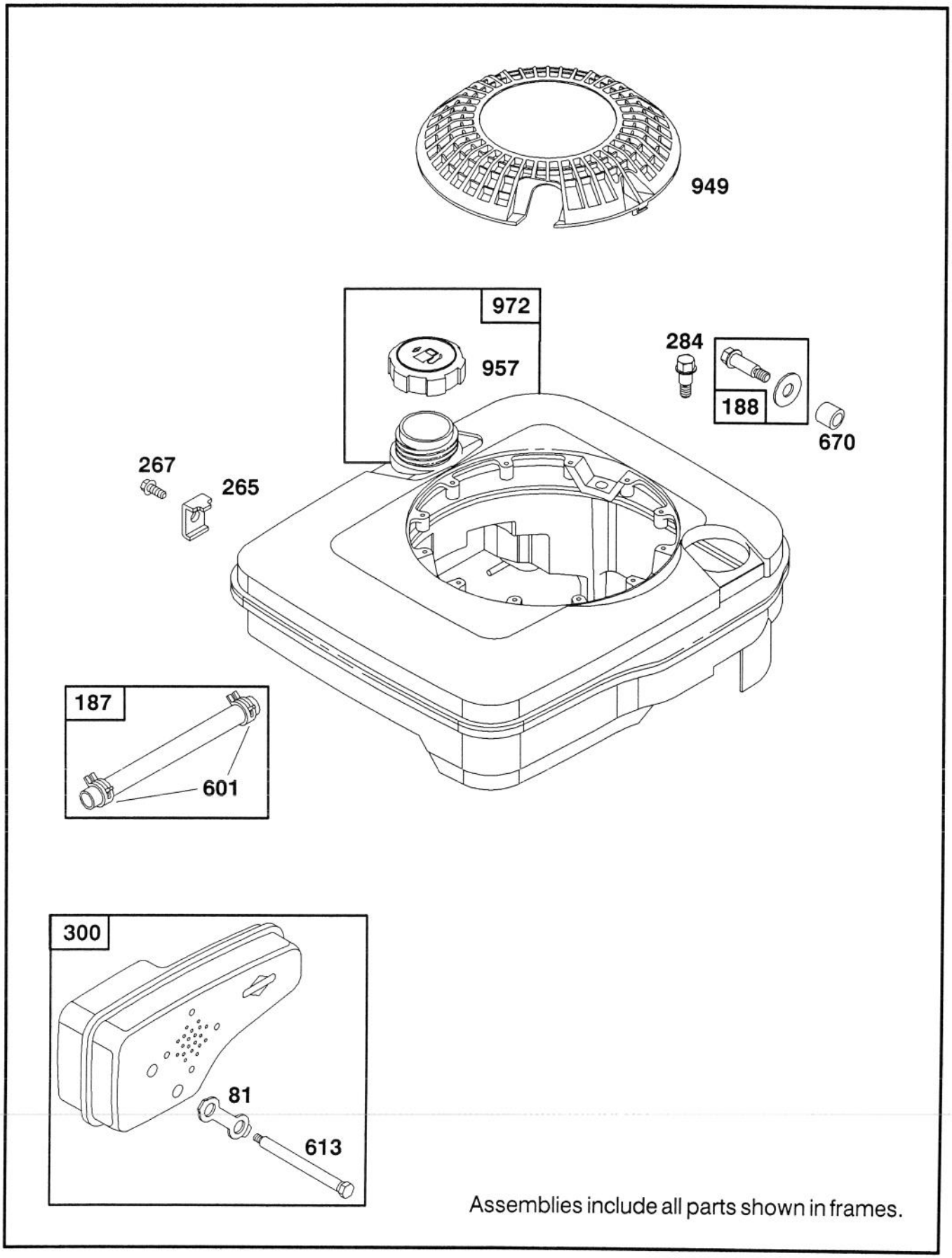

Assemblies include all parts shown in frames.

ENGINE BRIGGS & STRATTON MODEL 122702-0182-01

Ref. No.	Part No.	Description	No. Used
81	223664	Lock-Muffler Screw	1
187	492790	Pipe-Fuel	1
188	398540	Screw-Tank Mounting (Includes Washer)	1
265	221535	Clamp-Casing	1
267	94204	Screw-Hex. Head (Casing Clamp)	1
284	94511	Screw-Hex. Head	1

Ref. No.	Part No.	Description	No. Used
300	490547	Muffler-Exhaust	1
601	93807	Clamp-Hose	1
613	94231	Screw-Muffler Mtg.	1
670	280512	Spacer-Fuel Tank	1
949	281136	Guard-Finger	1
957	397974	Cap Assy-Fuel	1
972	494340	Tank Assembly-Fuel	1

ENGINE BRIGGS & STRATTON MODEL 122702-0182-01

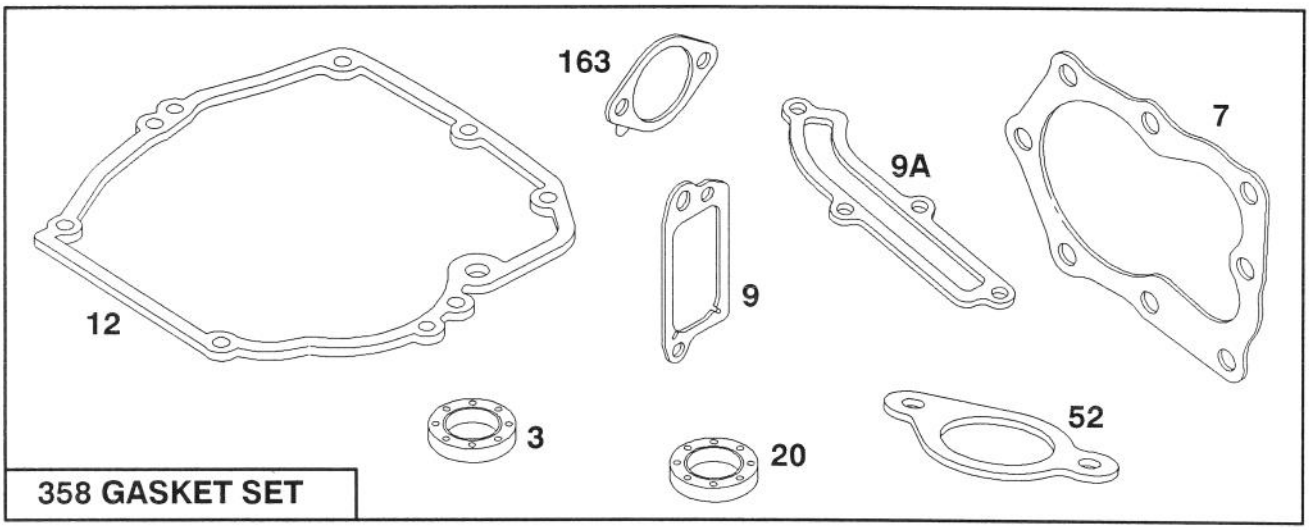

358 GASKET SET

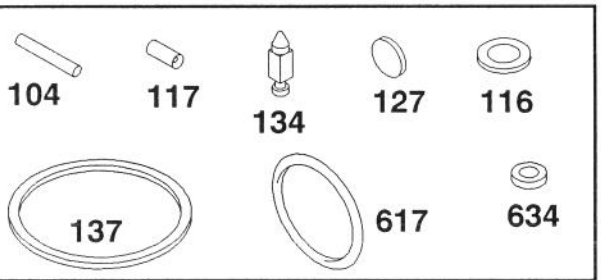

121 CARBURETOR OVERHAUL KIT

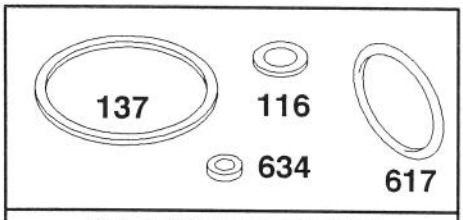

977 CARBURETOR GASKET SET

Assemblies include all parts shown in frames.

ENGINE BRIGGS & STRATTON MODEL 122702-0182-01

Ref. No.	Part No.	Description	No. Used
★3	393862	Seal-Oil	1
★7	272200	Gasket-Cylinder Hd.	1
★9	271904	Gasket-Valve Cover	1
★9A	272238	Gasket-Baffle Plate	1
★12	272198	Gasket-Crankcase	1
★20	399781	Seal-Oil	1
★52	272199	Gasket-Intake Elbow	1
●104	231371	Pin-Float Hinge	1
●◆116		Gasket-Sealing (Sold in Kit Only).	1
●117		Jet (Sold in Kit Only).	1
121	493762	Carburetor Overhaul Kit	1

Ref. No.	Part No.	Description	No. Used
●127		Plug-Welch (Sold in Kit Only).	1
●134	398188	Valve-Inlet (Includes Seat)	1
●◆137		Gasket-Bowl (Sold in Kit Only).	1
★163	272296	Gasket-Air Cleaner	1
358	493263	Gasket Set	1
●◆617	270344	Seal-Fuel Intake Tube	1
●◆634		Washer-Shaft (Sold in Kit Only)	1
977	490937	Gasket Set-Carburetor	1

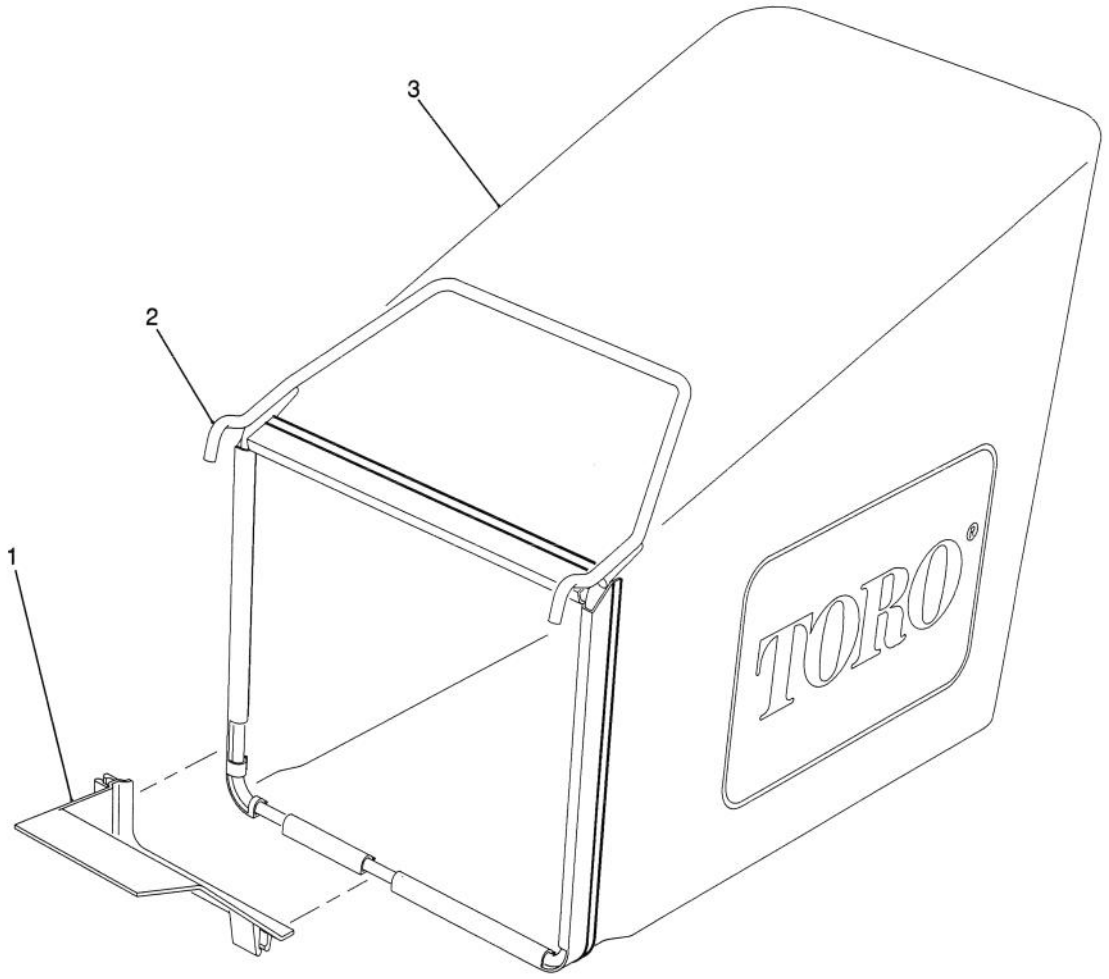

C-0368

GRASS BAG ASSEMBLY

Ref. No.	Part No.	Description	No. Used
1	71-3750	Ramp - Grass Bag	1
2	71-8180	Frame - Grass Bag	1

Ref. No.	Part No.	Description	No. Used
3	71-8270	Bag - Grass	1