Form Number 3356-696 Rev A

Greensmaster® 1600

Model No. 04060 - 260003001 and up.

Parts Catalog

Ordering Replacement Parts

To order replacement parts, please supply the part number, the quantity, and the description of each part desired.

Understanding Reference Numbers

Each Identified part in an illustration has a reference number. The reference number for a part also appears in the parts list, along with other information about the part.

This catalog uses two special reference number formats, one to indicate parts in a service assembly and another to indicate the quantity of a given part in an illustration.

Service Assembly Reference Numbers

Parts in service assemblies have reference numbers in the form a:b. The a represents the reference number of the entire service assembly and the b represents a sequential number unique to each part within the service assembly.

For example, a wheel assembly might be identified by reference number 6, the tire by 6:1, the valve by 6:2, and the wheel by 6:3. When you order the assembly identified by reference number 6, you receive all parts identified by reference numbers 6:1, 6:2, and 6:3. However, you may also order any part individually. Reference numbers of this type appear in illustrations and in part lists.

Reference Numbers Indicating Quantity

In an illustration, if a reference number indicates more than one part, the reference number has the form nX y. The n represents the quantity of the part, the X is the multiplication symbol, and the y represents the reference number.

For example, in an illustration, the reference number 2X 37 means that two of the parts identified by reference number 37 are indicated.

© The Toro Company - 2006
All Rights Reserved

Register your product at www.Toro.com

Contents

Description	Page	Description	Page
Frame Assembly	 3	Handle Assembly	 16
Engine Mount and Frame Assembly	 4	Roller and Height-of-Cut Bar Assembly	 17
Reel Drive Assembly	 5	Engine Crankcase Assembly	 18
Reel Assembly	 7	Camshaft and Valve Assembly	 19
Drum Drive Assembly	 8	Ignition Assembly	 20
Drum and Basket Assembly	 10	Governor Assembly	 21
Differential Assembly No. 93-9041	 11	Carburetor Assembly	 22
Inner Countershaft Assembly	 12	Air Cleaner and Muffler Assembly	 23
Outer Crankshaft Assembly	 13	Fuel Tank Assembly	 24
Engine Assembly	 14	Engine Decals	 25
Bellcrank Assembly	 15	Attachments and Accessories List	 26

Part Description Abbreviations

Part descriptions in this catalog may include the following abbreviations.

AR. . . . . as required
ASM. . . . . assembly
BBC. . . . . blade brake clutch
CARR. . . . . carriage
DEG. . . . . degrees
EXT. . . . . external
FH. . . . . flat head
GA. . . . . gauge
HD. . . . . heavy-duty
HF. . . . . hex flange
HH. . . . . hex head
HHF. . . . . hex head flange
HHFTF. . . . . hex head flange thread forming
HJ. . . . . hex jam
HLH. . . . . hex lag head
HOC. . . . . height-of-cut
HSBH. . . . . hex socket button head
HSFH. . . . . hex socket flat head
HSH. . . . . hex socket head
HWH. . . . . hex washer head
HWHTF. . . . . hex washer head thread forming
HYD. . . . . hydraulic
LH. . . . . left hand
NI. . . . . nylon insert
NPTF. . . . . national pipe thread fine
PFH. . . . . phillips flat head
PPH. . . . . phillips pan head
PPHTF. . . . . phillips pan head thread forming
PRH. . . . . phillips round head
PTH. . . . . phillips truss head
PTO. . . . . power-take-off
RH. . . . . right hand
ROPS. . . . . roll-over protection system
SFH. . . . . slotted fillister head
SHH. . . . . slotted hex head
SHWH. . . . . slotted hex washer head
SPH. . . . . slotted pan head
SQH. . . . . square head
SRH. . . . . slotted round head
STD. . . . . standard
TAP. . . . . self tapping
TTH. . . . . torx truss head

Footnotes

❶ Not illustrated

❷ Not serviced separately

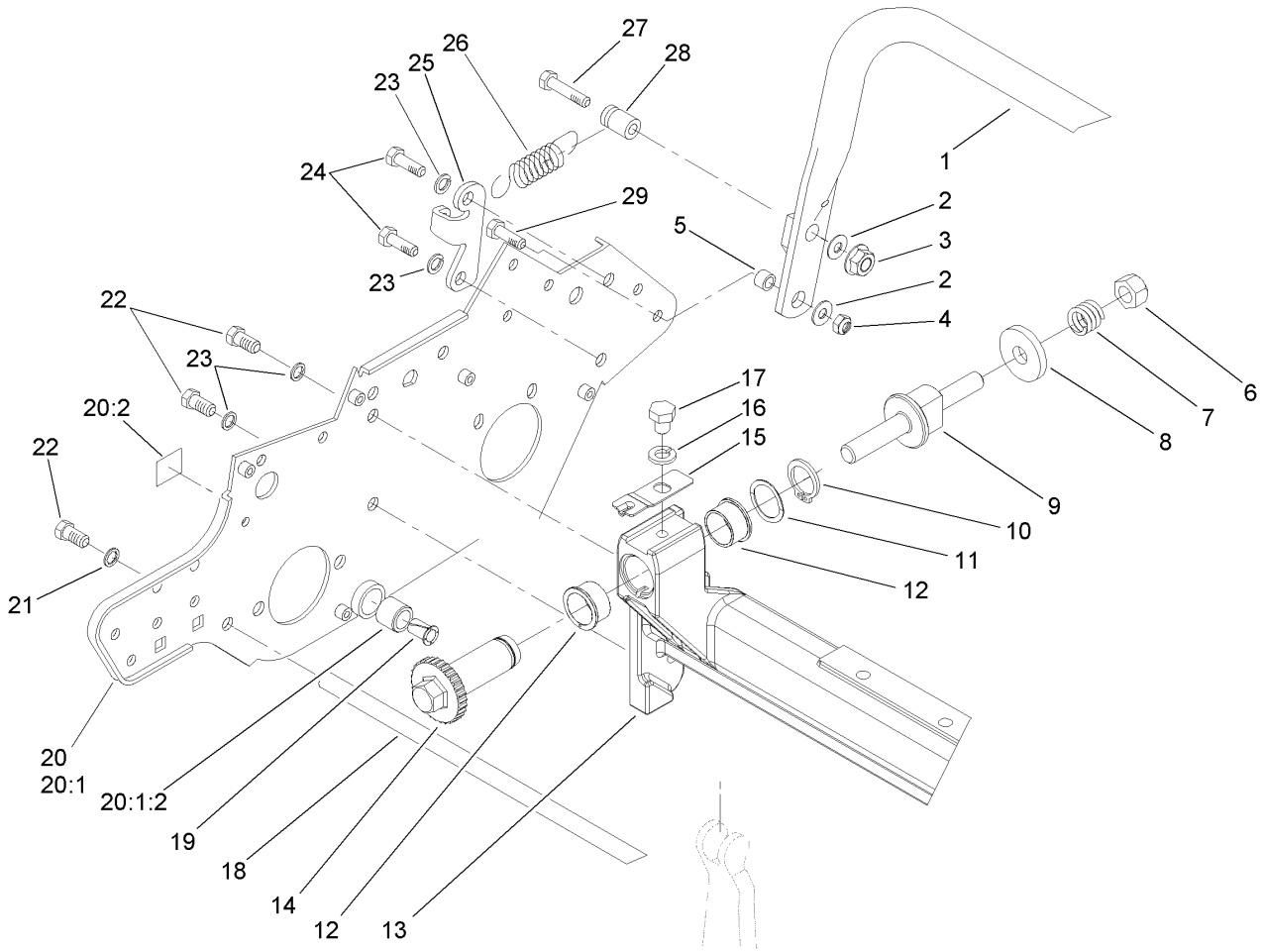

Frame Assembly

Ref	Part No.	Qty.	Description
1	93-9019-03	1	Kickstand ASM
2	3256-2	3	Washer-Flat
3	32128-25	1	Nut-HF
4	3296-29	2	Nut-Lock, NI
5	65-7910	2	Spacer
6	33025-00	2	Nut-Lock
7	99-3755	2	Spring-Compression
8	99-2098	2	Washer
9	99-2096	2	Screw-Adjuster, Bedbar
10	32120-93	2	Ring-Retaining, EXT
11	106-5335	2	Washer-Wave
12	106-5344	4	Bushing-Flange, Keyed
13	108-8649-01	1	Crossmember-Front
14	106-5363	2	Shaft-Adjuster
15	99-2097	2	Detent
16	3253-4	2	Washer-Lock
17	322-26	2	Screw-HH
18	94-5867	1	Rod-Frame
19	52-2890	2	Bushing-Nylon
20	94-9004	1	RH Side Plate ASM
❷20:1		1	RH Side Plate / Bushing ASM
20:1:2	63-9510	1	Bushing
20:2	93-9356	2	Decal-Warning, Belt
20:2	93-9389	2	Decal-Warning, Belt (Japan)

Ref	Part No.	Qty.	Description
21	3254-6	2	Washer-Lock, Internal
22	323-4	6	Screw-HH
23	3253-21	6	Washer-Lock
24	323-5	2	Screw-HH
25	65-7890	1	Bracket
26	65-7880	1	Spring-Extension
27	322-10	1	Screw-HH
28	65-7900	1	Retainer-Spring
29	322-5	2	Screw-HH

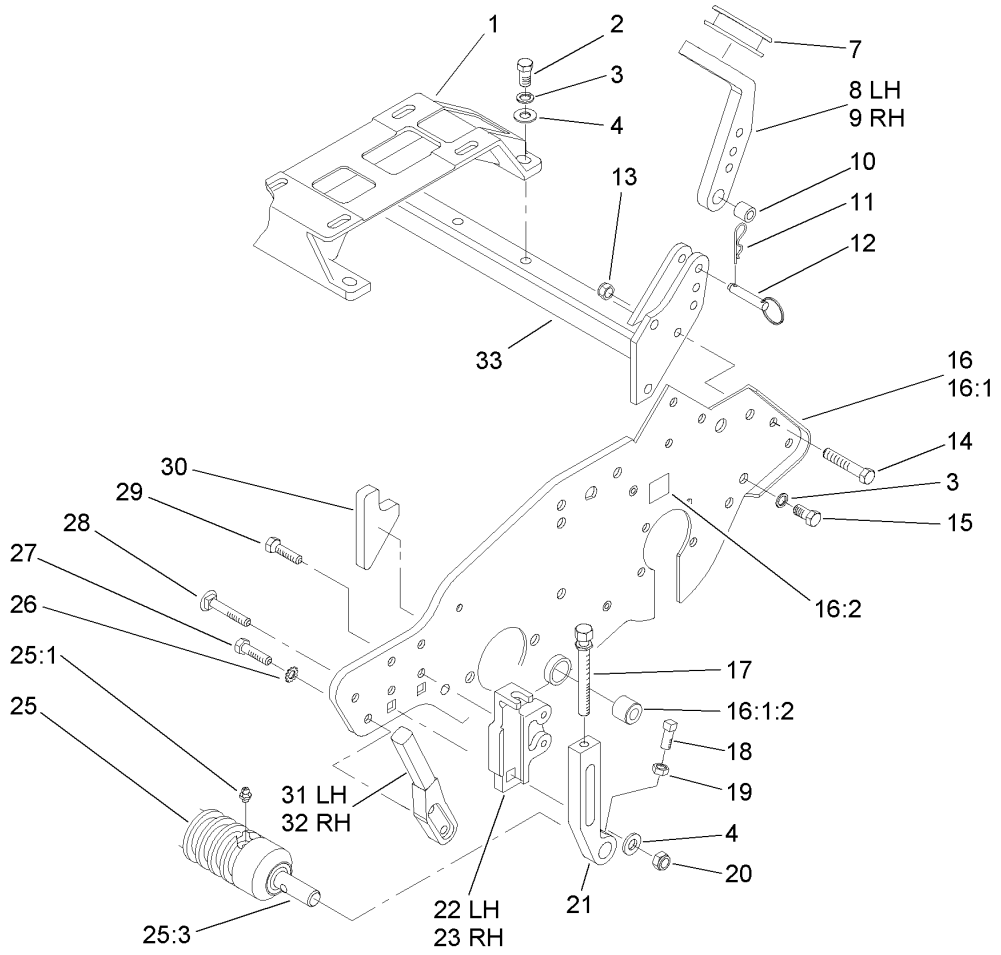

Engine Mount and Frame Assembly

Ref	Part No.	Qty.	Description
1	88-7670	1	Mount-Engine
2	3234-1	4	Screw-HHF
3	3253-21	4	Washer-Lock
4	3256-24	2	Washer-Flat
7	65-7510	2	Grommet-Handle
8	93-6038	1	Arm-Handle Support, LH
9	93-6037	1	Arm-Handle Support, RH
10	93-6024	2	Bushing-Support, Handle
11	3290-467	2	Pin-Hair
12	93-6029	2	Pin-Clevis, Ring
13	3296-29	2	Nut-Lock, NI
14	322-9	2	Screw-HH
15	323-4	2	Screw-HH
16	94-9005	1	LH Side Plate ASM
❷16:1		1	LH Side Plate/Bushing ASM
16:1:2	63-9510	1	Bushing
16:2	93-9356	1	Decal-Warning, Belt
16:2	93-9389	1	Decal-Warning, Belt (Japan)
17	93-6051	2	Screw-HOC
18	3242-4	2	Screw-Set, SQH
19	3218-2	2	Nut-Jam
20	32128-21	2	Nut-HF
21	93-6090	2	Arm-HOC
21	99-4286	2	Arm-HOC, Extended

Ref	Part No.	Qty.	Description
22	93-6048	1	Bracket-HOC, RH
23	93-6049	1	Bracket-HOC, LH
25	93-9039	1	Weihle Roller ASM
25:1	302-5	2	Fitting-Grease
25:3	52-3180	2	Bearing-Roller, Front
26	3255-8	4	Washer-Lock
27	322-2	4	Screw-HH
28	3231-5	2	Screw-CARR
29	92-8914	4	Bolt-Face, Tapered
30	93-6064	1	Seal-Catcher, Grass
31	93-9018	1	Rod-Basket, LH
32	93-9017	1	Rod-Basket, RH
33	93-9026-01	1	Frame-Rear

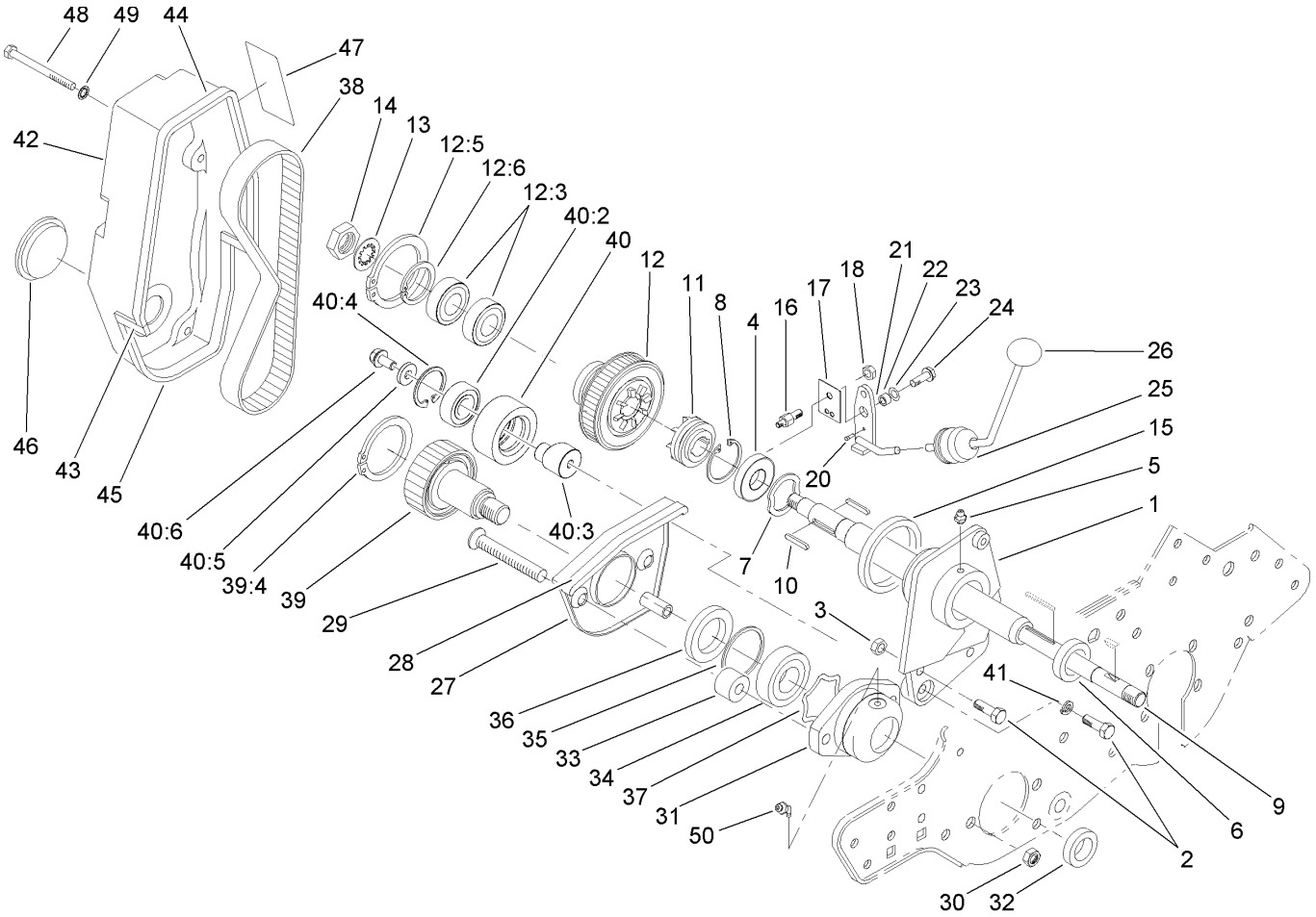

Reel Drive Assembly

Ref	Part No.	Qty.	Description
1	92-8013	1	Housing-Clutch
2	322-5	3	Screw-HH
3	3296-29	2	Nut-Lock, NI
4	251-318	1	Bearing-Ball
5	302-5	1	Fitting-Grease
6	253-118	1	Seal-Oil
7	88-7720	1	Spring-Wave
8	32151-75	1	Ring-Retaining
9	94-5872	1	Shaft-Power
10	88-7150	2	Key
11	65-6940	1	Clutch-Slider, Jaw
12	88-7830	1	Clutch And Pulley ASM
12:3	251-336	2	Bearing-Ball
12:5	32151-95	1	Ring-Retaining
12:6	32151-89	1	Ring-Retaining, Bowed
13	3254-4	1	Washer-Lock/Int
14	3219-5	1	Nut-Hex
15	65-6970	1	Seal-Felt
16	93-9014	1	Pin-Clutch, Actuator
17	65-6290	1	Spring-Detent, Clutch
18	3296-42	1	Nut-Lock, NI
20	95-5731	1	Screw-Drive
21	88-7170	1	Lever-Clutch
22	88-7860	1	Spacer

Ref	Part No.	Qty.	Description
23	3290-414	1	Washer-Belleville
24	80-0700	1	Screw
25	65-8960	1	Boot-Clutch
26	233-69	1	Knob
27	65-7190-01	1	Cover-Arm
28	65-7131	1	Seal-Cover, Strip
29	3289-23	2	Capscrew
30	3296-39	2	Nut-Lock, NI
31	65-8640	1	Housing-Bearing
32	253-96	1	Seal-Oil
33	65-8290	2	Standoff-Cover
34	251-342	1	Bearing-Ball
35	32151-92	1	Ring-Retaining
36	253-163	1	Seal
37	3290-485	1	Washer-Wave
38	65-6200	1	Belt
39	88-7840	1	Pulley And Drive ASM
39:4	32151-95	1	Ring-Retaining
40	88-7850	1	Idler Pulley ASM
40:2	38-7820	1	Bearing-Ball
40:3	88-7190	1	Spacer
40:4	32120-42	1	Ring-Retaining
40:5	88-7200	1	Washer-Flat
40:6	3234-14	1	Screw-HHF

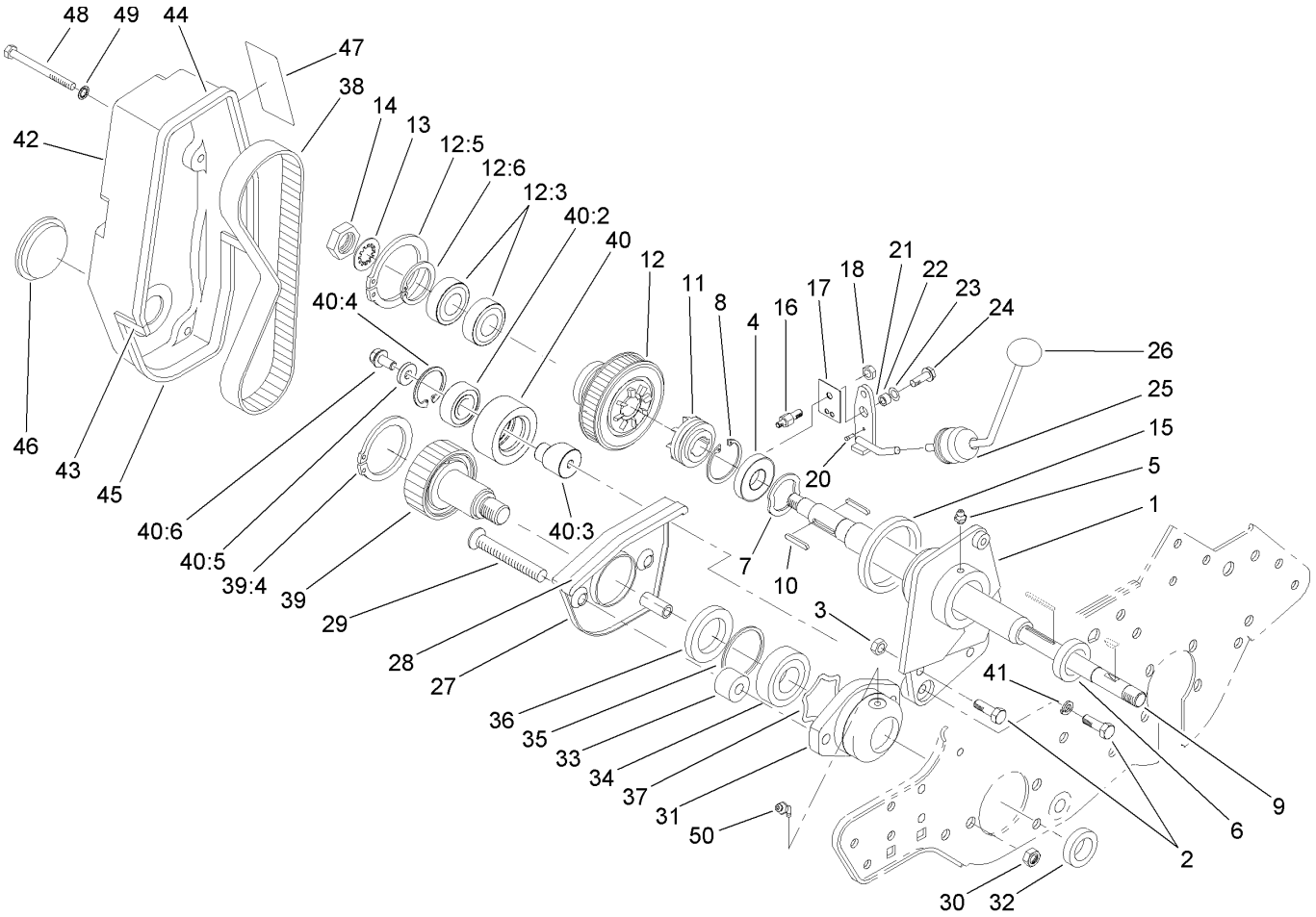

Reel Drive Assembly (continued)

Ref	Part No.	Qty.	Description
41	3254-2	1	Washer-Lock, Internal
42	88-7700-01	1	Cover-Reel, Drive
43	88-7770	2	Strip-Seal, Front
44	88-7790	1	Strip-Seal, Upper
45	88-7800	1	Strip-Seal, Lower
46	237-160	1	Plug-Rubber
47	92-4817	1	Decal-Engagement, Reel (Japan)
47	93-7346	1	Decal-Engagement, Reel
48	321-20	4	Screw-HH
49	3254-8	4	Washer-Lock
50	302-11	1	Fitting-Lube, 45 DEG

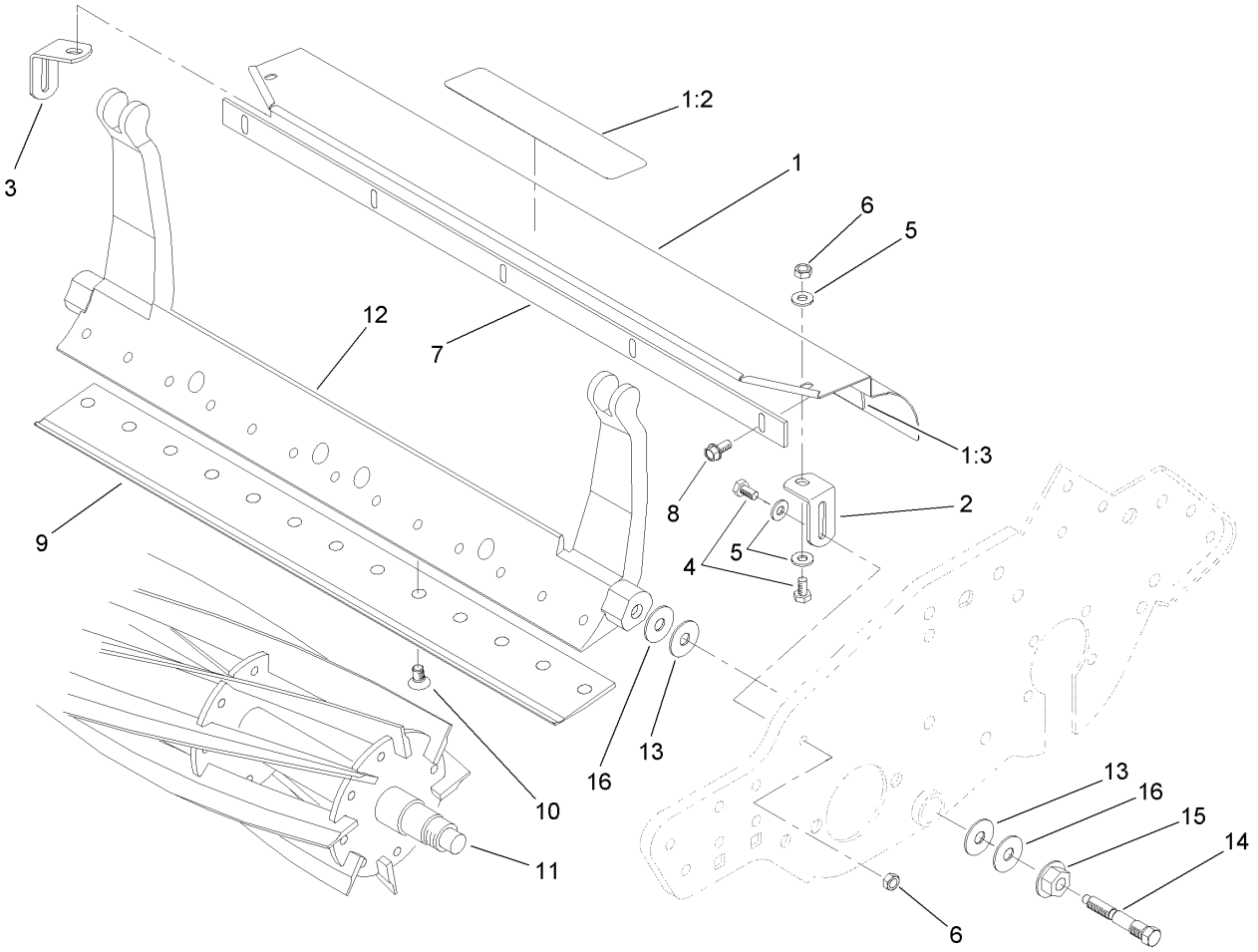

Reel Assembly

Ref	Part No.	Qty.	Description
1	110-7370	1	Grass Shield ASM
1:2	84-6560	1	Decal-Warning (Japan)
1:2	93-8064	1	Decal-Danger, Ce
1:3	95-1636	1	Strip-Seal
2	65-6450	1	Bracket-LH
3	65-6460	1	Bracket-RH
4	321-3	4	Screw-HH
5	3256-22	6	Washer-Flat
6	3296-42	4	Nut-Lock, NI
7	94-5879	1	Bar-Cut Off
8	104-2065	6	Screw-HWH
❶9	104-2646	1	Bedknife-Highcut
9	93-9015	1	Bedknife-Lowcut
❶9	94-5885	1	Bedknife-Tournament Cut
10	57-4910	16	Screw-Special
11	95-0900	1	8-Blade Reel ASM
12	93-9049-01	1	Bedbar-Machine
13	52-2900	4	Washer-Plastic
14	65-6270	2	Bolt-Bedbar
15	32128-48	2	Nut-Lock, HHF
16	52-2860	4	Washer

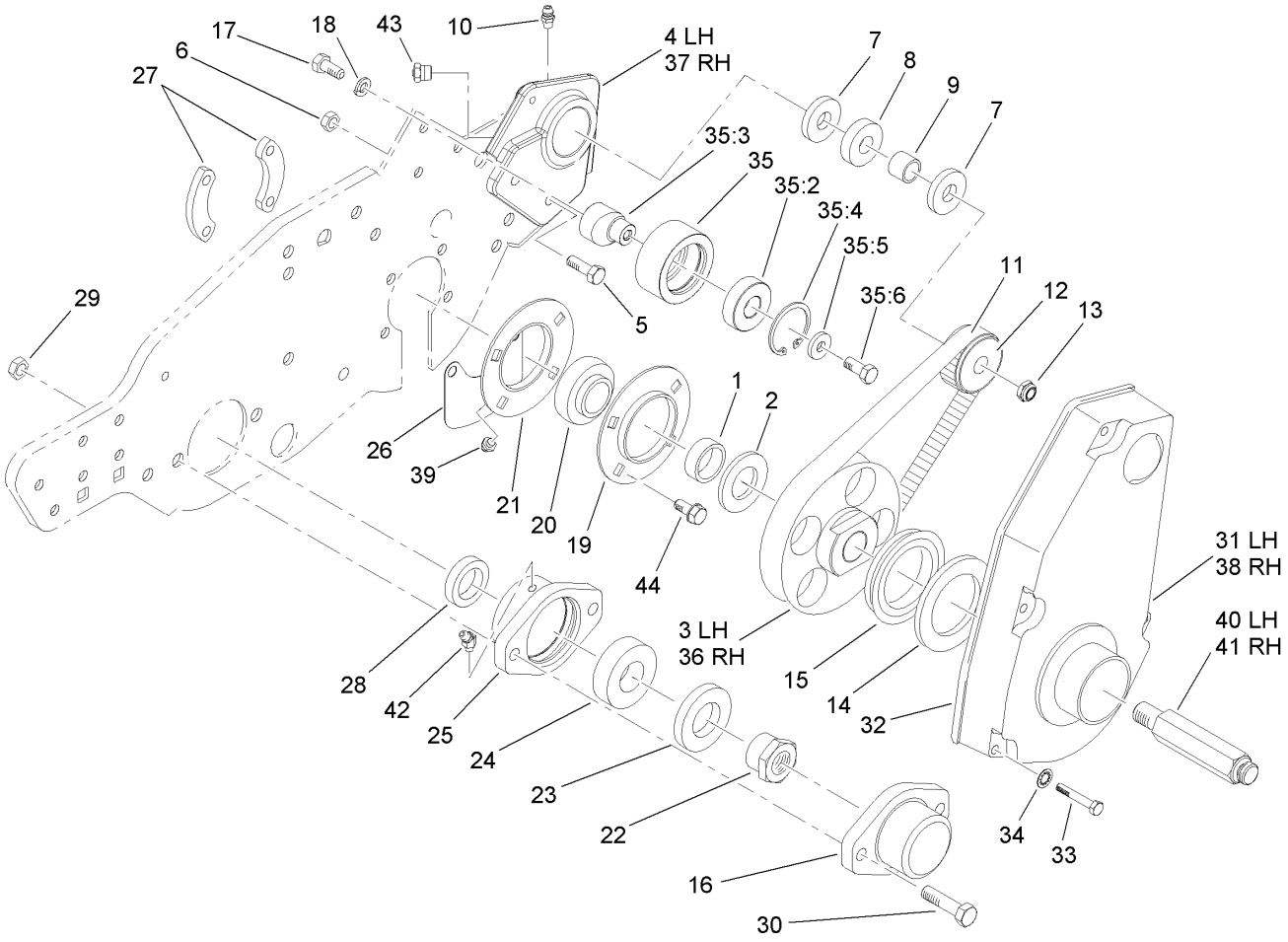

Drum Drive Assembly

Ref	Part No.	Qty.	Description
1	88-7530	2	Spacer
2	88-7540	2	Washer-Backup
3	105-5365	1	Pulley-Drum, LH
4	108-9414	1	Housing-Support, Differential (LH)
5	322-5	4	Screw-HH
6	3296-29	4	Nut-Lock, NI
7	253-160	4	Seal-Grease
8	251-338	2	Bearing-Ball
9	86-7130	2	Spacer-Pulley
10	302-5	2	Fitting-Grease
11	65-6210	2	Belt
12	65-6660	2	Pulley
13	3296-57	2	Nut-Lock, NI
14	94-9018	2	Washer-Plastic
15	253-161	2	Seal-V-Ring
16	65-6220-01	1	Cover-End, Reel
17	322-3	2	Screw-HH
18	3254-2	2	Washer-Lock, Internal
19	65-6590	2	Flangette-Bearing
20	88-7880	2	Bearing
21	95-0923	2	Flangette
22	92-7302	1	Nut-Bearing, Lock
23	253-163	1	Seal
24	251-342	1	Bearing-Ball

Ref	Part No.	Qty.	Description
25	65-8640	1	Housing-Bearing
26	65-8720	2	Closure-Plate, Side
27	65-8730	4	Clamp-Bearing
28	253-96	1	Seal-Oil
29	3296-39	2	Nut-Lock, NI
30	323-7	2	Screw-HH
31	88-7680-01	1	Cover-Belt Drum, LH
32	88-7810	2	Seal-Strip, Drum Cover
33	321-11	8	Screw-HH
34	3254-8	8	Washer-Lock
35	88-7850	2	Idler Pulley ASM
35:2	38-7820	1	Bearing-Ball
35:3	88-7190	1	Spacer
35:4	32120-42	1	Ring-Retaining
35:5	88-7200	1	Washer-Flat
35:6	3234-14	1	Screw-HHF
36	105-5364	1	Pulley-Drum, RH
37	108-9416	1	Housing-Support, Differential (RH)
38	88-7690-01	1	Cover-Drum Belt, RH
39	104-1843	2	Fitting-Grease, 90 DEG
40	88-7580	1	Shaft-Wheel, Transport (LH)
41	88-7590	1	Shaft-Wheel, Transport (RH)
42	302-11	1	Fitting-Lube, 45 DEG
43	302-34	2	Fitting-Lube

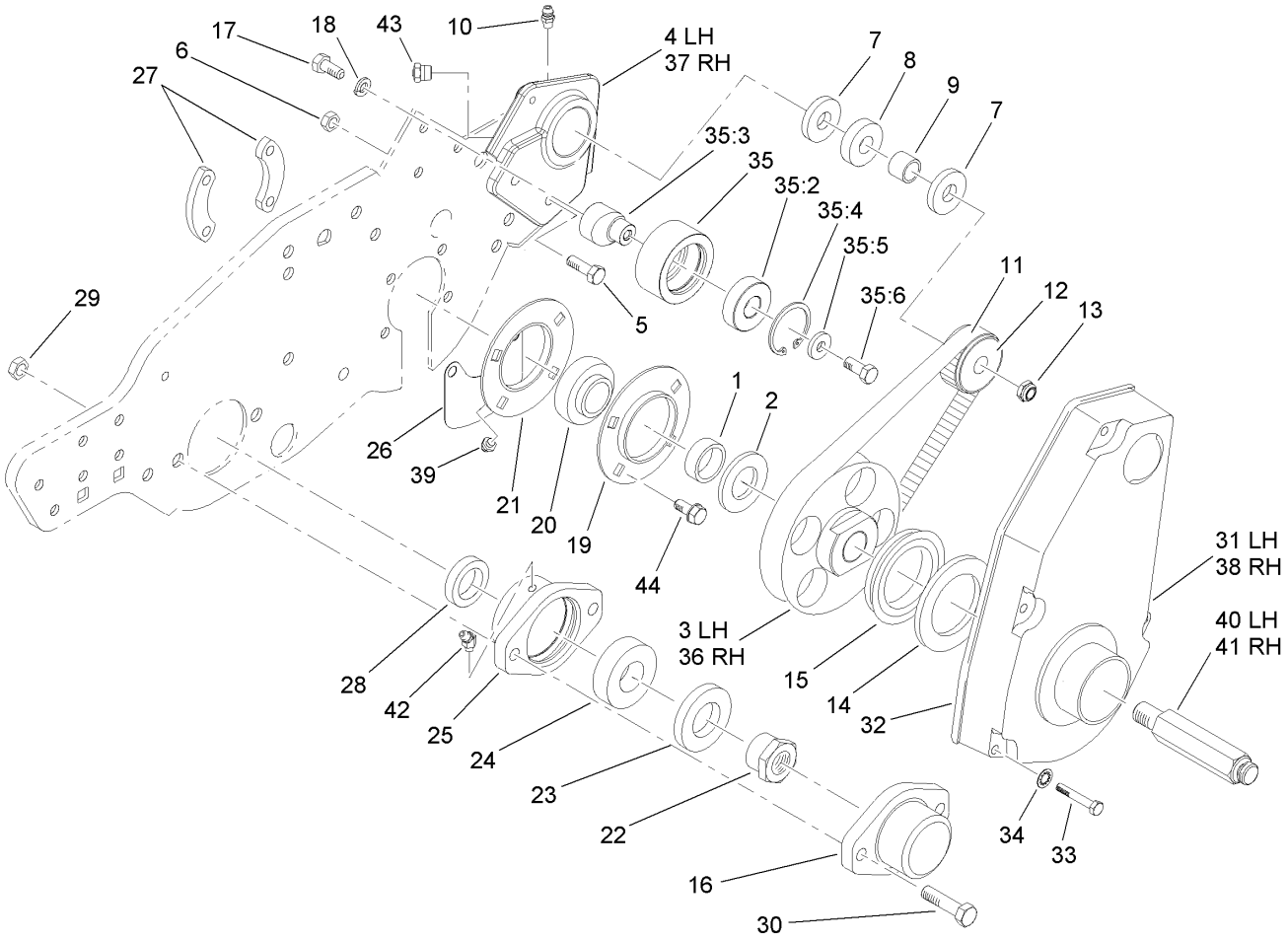

Drum Drive Assembly (continued)

Ref	Part No.	Qty.	Description
44	3234-14	8	Screw-HHF

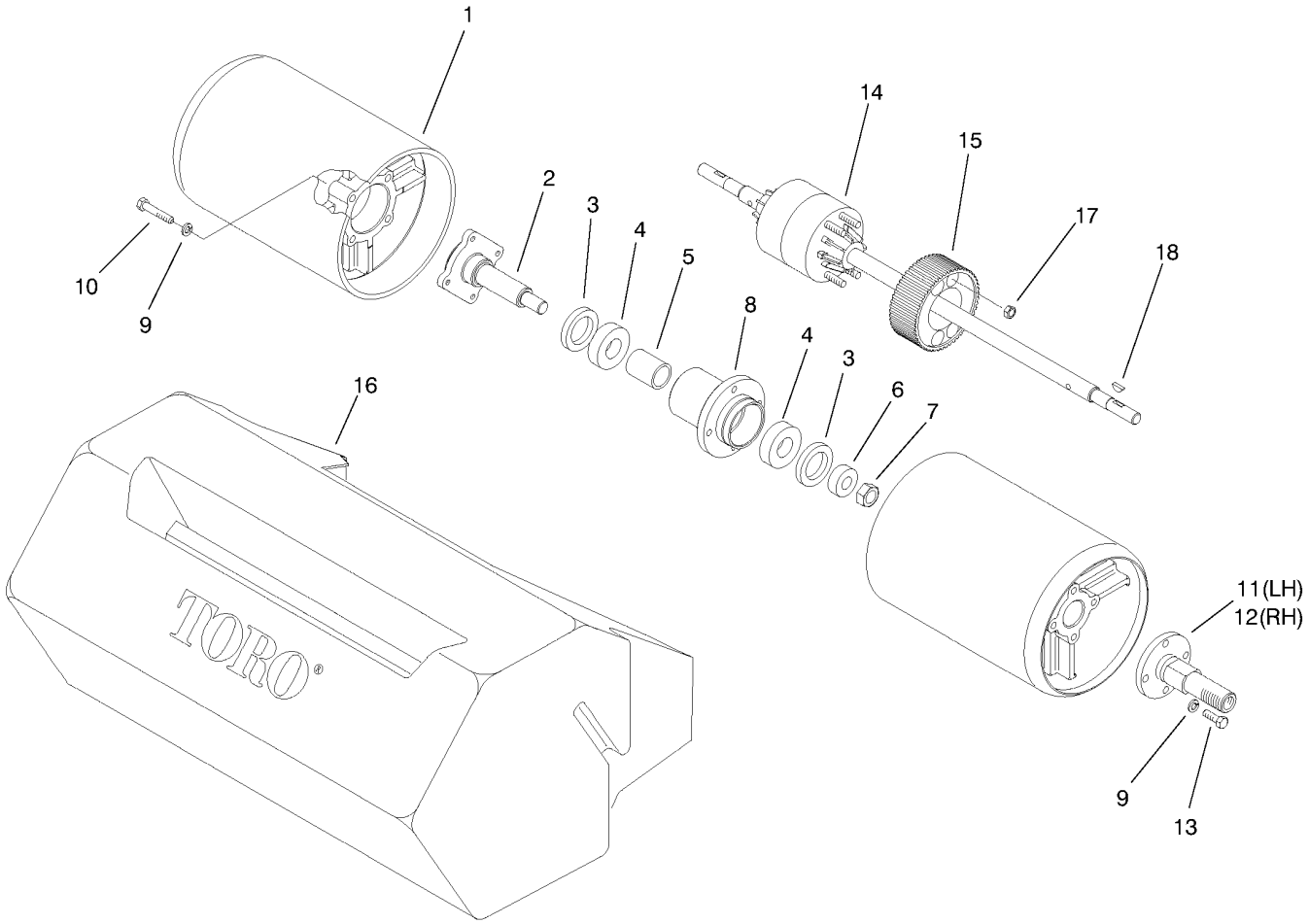

Drum and Basket Assembly

Ref	Part No.	Qty.	Description
1	93-9042	2	Drum-Long
2	94-5850	1	Spindle-Drum
3	253-159	2	Seal
4	251-82	2	Bearing-Ball
5	65-6520	1	Spacer
6	65-6530	1	Spacer
7	3296-33	1	Nut-Lock, NI
8	94-5852	1	Hub-Drum
9	3253-4	16	Washer-Lock
10	322-9	8	Screw-HH
11	88-7520	1	Shaft-Extension, Drum (LH)
12	88-7510	1	Shaft-Extension, Drum (RH)
13	322-5	8	Screw-HH
14	93-9041	1	Differential
15	65-9120	1	Pulley-Housing, Differential
16	94-5893	1	Basket ASM
❶16:1	3290-409	9	Rivet
❶16:3	94-5894	1	Channel-Basket
17	104-8300	4	Nut-Flange, NI
18	3257-30	2	Key-Woodruff

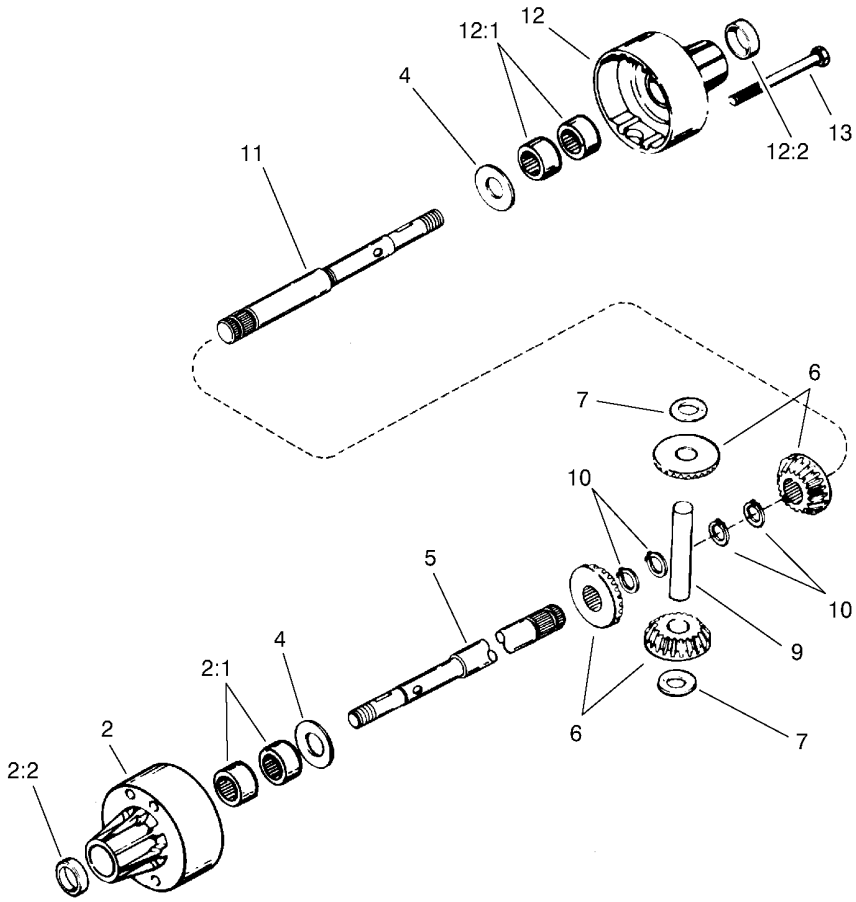

Differential Assembly No. 93-9041

Ref	Part No.	Qty.	Description
2	95-5741	1	Carrier-Differential
2:1	95-5738	4	Bearing-Needle
2:2	95-5737	2	Seal-Oil
4	95-5745	2	Washer
5	95-5743	1	Axle-Long
6	104-0503	1	Gear Set-Differential
7	95-5744	2	Washer-Flat
9	95-5747	1	Pin-Drive
10	95-5746	4	Ring-Retaining
11	95-5742	1	Axle-Short
12	95-5740	1	Carrier-Differential
12:1	95-5738	4	Bearing-Needle
12:2	95-5737	2	Seal-Oil
13	95-5739	4	Screw
❶14	95-5734	1	Grease

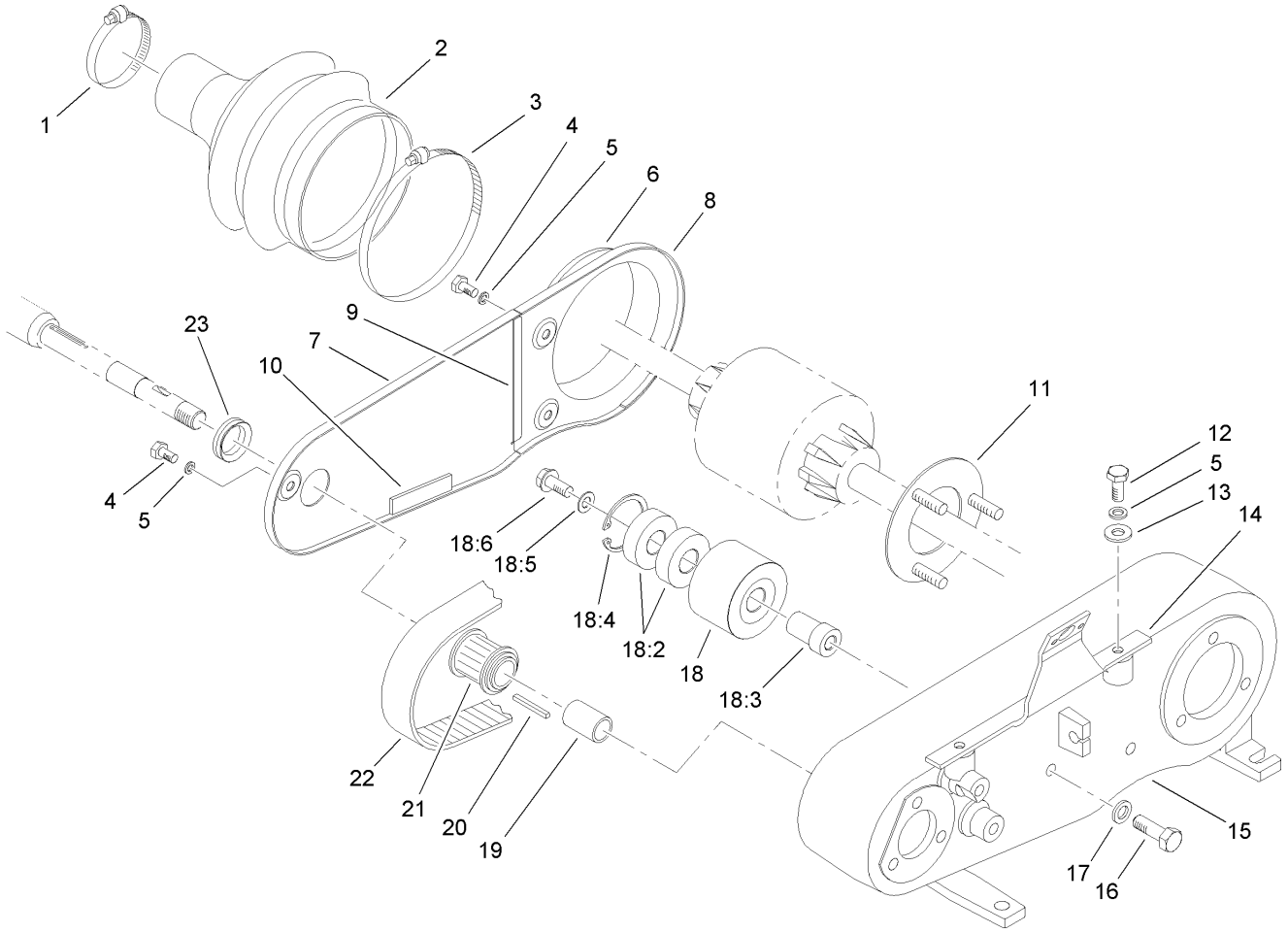

Inner Countershaft Assembly

Ref	Part No.	Qty.	Description
1	2412-139	1	Clamp-Hose
2	94-5866	1	Boot-Differential
3	2412-140	1	Clamp-Hose
4	321-2	3	Screw-HH
5	3253-3	5	Washer-Lock
6	88-7250-03	1	Cover-Box, Rear
7	88-7240-03	1	Cover-Box, Front
8	65-6902	1	Strip-Seal, Cover
9	65-6903	1	Strip-Seal, Cover
10	65-6901	1	Strip-Seal, Cover
11	65-6720	1	Plate-Screw
12	321-3	2	Screw-HH
13	3256-22	2	Washer-Flat
14	93-1448	1	Bracket Cover ASM
15	88-7230	1	Housing-Shaft, Counter
16	322-5	1	Screw-HH
17	3254-2	1	Washer-Lock, Internal
18	88-7870	1	Idler Pulley ASM
18:2	38-7820	2	Bearing-Ball
18:3	88-7380	1	Spacer-Pulley
18:4	32120-42	1	Ring-Retaining
18:5	88-7200	1	Washer-Flat
18:6	3234-14	1	Screw-HHF
19	86-7140	1	Spacer

Ref	Part No.	Qty.	Description
20	65-6850	1	Key-Square
21	65-8910	1	Pulley-Countershaft
22	65-9080	1	Belt
23	88-7710	1	Seal-V-Ring

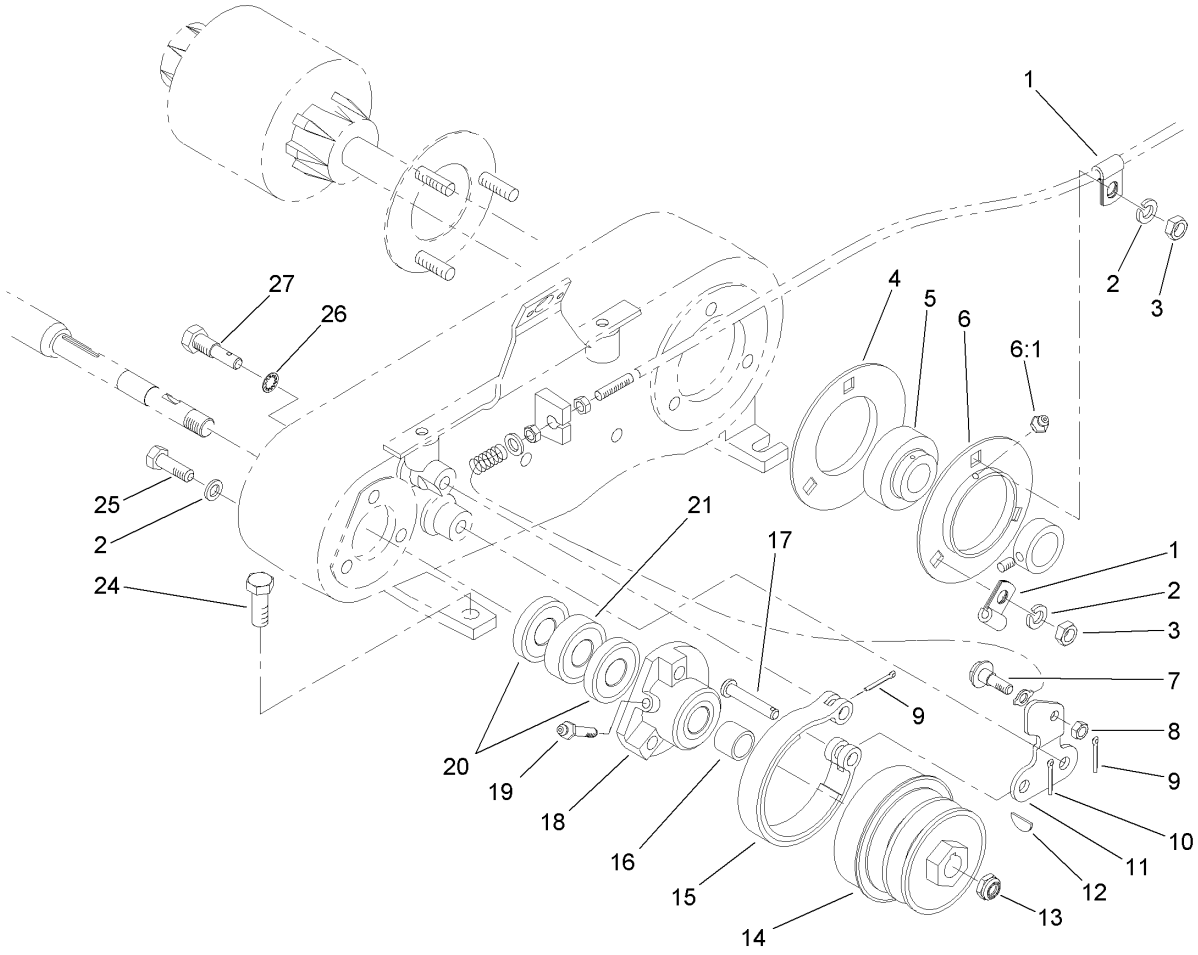

Outer Crankshaft Assembly

Ref	Part No.	Qty.	Description
1	88-7970	2	Clip
2	3253-4	3	Washer-Lock
3	32149-1	3	Nut-Keps
4	65-6710	1	Flangette-Bearing
5	108-7663	1	Bearing-Race, Extended
6	65-6700	1	Flangette-Lube
6:1	302-65	1	Zerk
7	11-9030	1	Screw-Shoulder
8	3296-42	1	Nut-Lock, NI
9	3272-6	2	Pin-Cotter
10	3272-8	1	Pin-Cotter
11	65-8610	1	Lever-Brake
12	3257-30	1	Key-Woodruff
13	3296-63	1	Nut-Lock NI
14	92-9212	1	Pulley-Shaft, Input
15	65-8700	1	Band-Brake
16	86-7130	1	Spacer-Pulley
17	283-75	1	Pin-Clevis
18	65-6760	1	Housing-Bearing
19	302-64	1	Fitting-Grease
20	253-160	2	Seal-Grease
21	251-338	1	Bearing-Ball
24	3234-1	4	Screw-HHF
25	322-5	3	Screw-HH

Ref	Part No.	Qty.	Description
26	3254-6	2	Washer-Lock, Internal
27	65-6810	2	Support-Brake

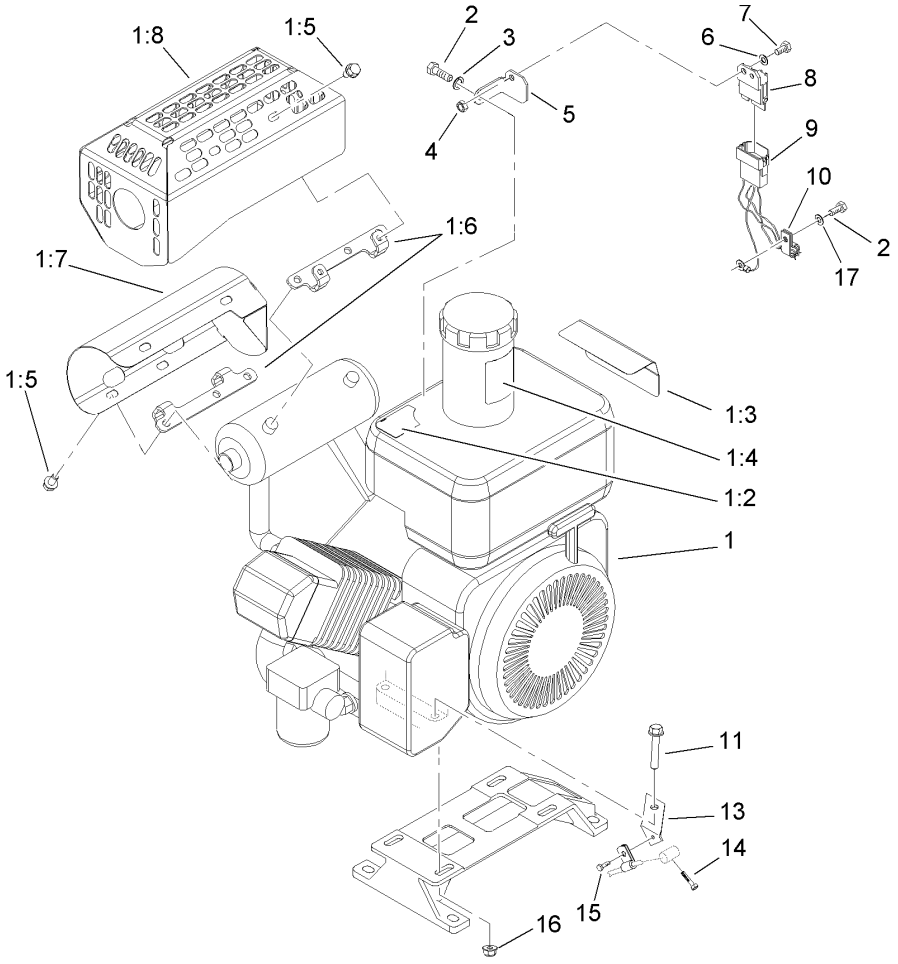

Engine Assembly

Ref	Part No.	Qty.	Description
1	112-9382	1	Engine ASM
1:2	105-5309	1	Decal-Surface, Hot (Ce)
1:2	83-2560	1	Decal-Surface, Hot
1:3	92-4813	1	Decal-Danger (Japan)
1:3	93-7348	1	Decal-Danger
1:4	93-9886	1	Decal-Fuel
1:5	104-2628	8	Screw-HWH
1:6	104-9771	2	Bracket-Guard, Muffler
1:7	110-7359	1	Muffler Shield ASM
1:8	110-7361-03	1	Guard-Muffler
2	33114-016	2	Screw-HH
3	3253-4	1	Washer-Lock
4	33023-00	1	Nut-Lock
5	94-5861	1	Bracket-Module
6	3256-22	1	Washer-Flat
7	33113-016	1	Screw-HH
8	1-323430	1	Module-Interlock
9	105-5351	1	Harness-Wire, Module
10	2412-93	1	Clamp-R
11	94-5780	4	Screw-HWH
13	88-7960	1	Bracket-Cable, Throttle
14	94-9015	1	Screw-HH
15	104-2065	1	Screw-HWH
16	104-8300	4	Nut-Flange, NI

Ref	Part No.	Qty.	Description
17	33094-00	1	Washer-Plain

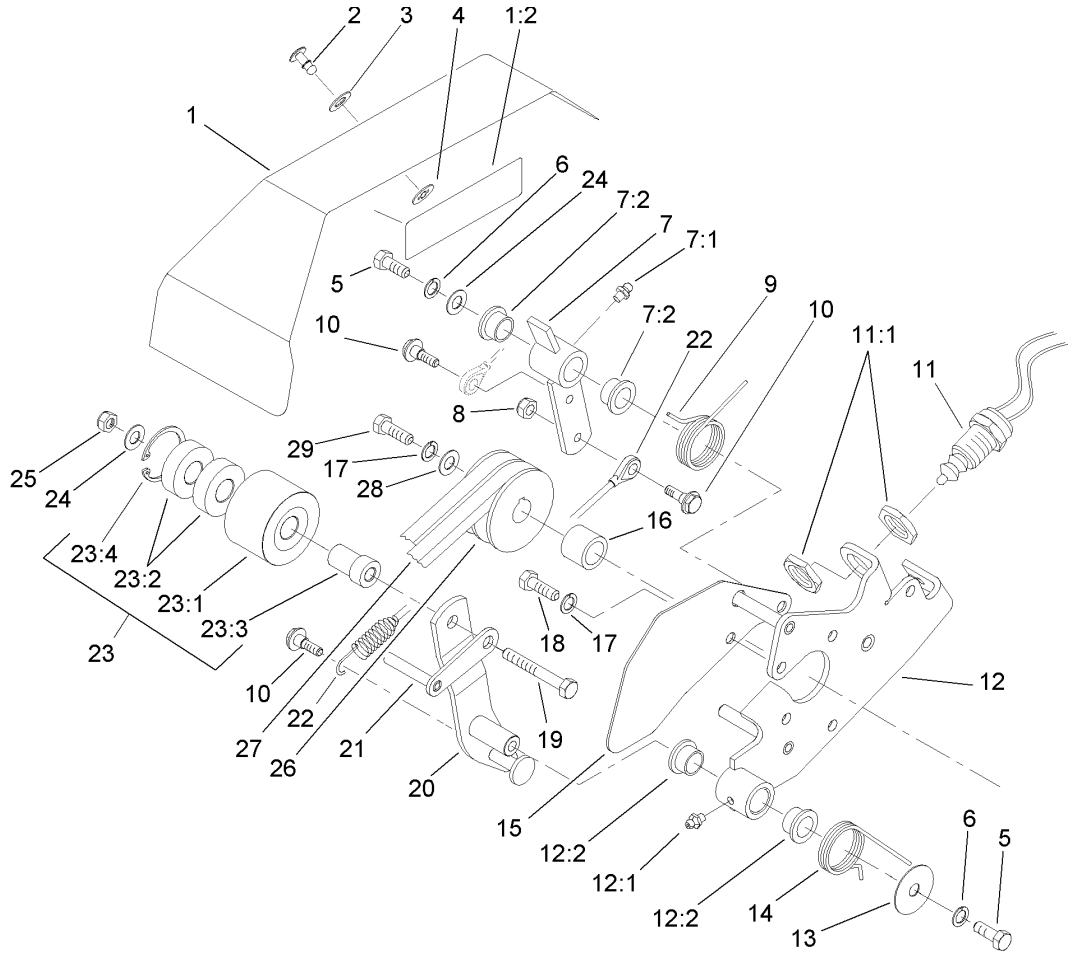

Bellcrank Assembly

Ref	Part No.	Qty.	Description
1	94-9007	1	Bellcrank Cover ASM
1:2	84-7280	1	Decal-Danger, Japan
1:2	93-7273	1	Decal-Danger
2	93-6074	1	Stud
3	3256-70	1	Washer-Flat
4	93-6073	1	Retainer
5	323-4	2	Screw-HH
6	3253-21	2	Washer-Lock
7	93-6014	1	Lever ASM
7:1	302-5	1	Fitting-Grease
7:2	65-8770	2	Bushing-Bellcrank
8	3296-42	3	Nut-Lock, NI
9	93-6011	1	Spring-Torsion
10	11-9030	3	Screw-Shoulder
11	87-5490	1	Switch-Clutch
11:1	3218-20	2	Nut-Jam
12	93-6015	1	Clutch Bracket ASM
12:1	302-5	1	Fitting-Grease
12:2	65-8770	2	Bushing-Bellcrank
13	93-6099	1	Washer
14	93-6012	1	Spring-Torque, Clutch Lever
15	93-6013-03	1	Shield-Belt
16	65-8260	1	Spacer-Shaft, Engine
17	3253-4	6	Washer-Lock

Ref	Part No.	Qty.	Description
18	33114-016	5	Screw-HH
19	323-11	1	Screw-HH
20	93-6003-03	1	Lever-Clutch
21	95-0922	1	Guide-Belt
22	93-9024	1	Cable Link ASM
23	98-7296	1	Idler Pulley ASM
23:1	98-7297	1	Pulley-Idler
23:2	38-7820	2	Bearing-Ball
23:3	88-7350	1	Bushing-Pulley
23:4	32120-42	1	Ring-Retaining
24	3256-56	5	Washer-Flat
25	3296-39	1	Nut-Lock, NI
26	92-9216	1	Pulley-Drive, Input
27	92-9218	1	V-Belt (Matched Set)
28	65-8270	1	Washer
29	33114-025	1	Screw-HH

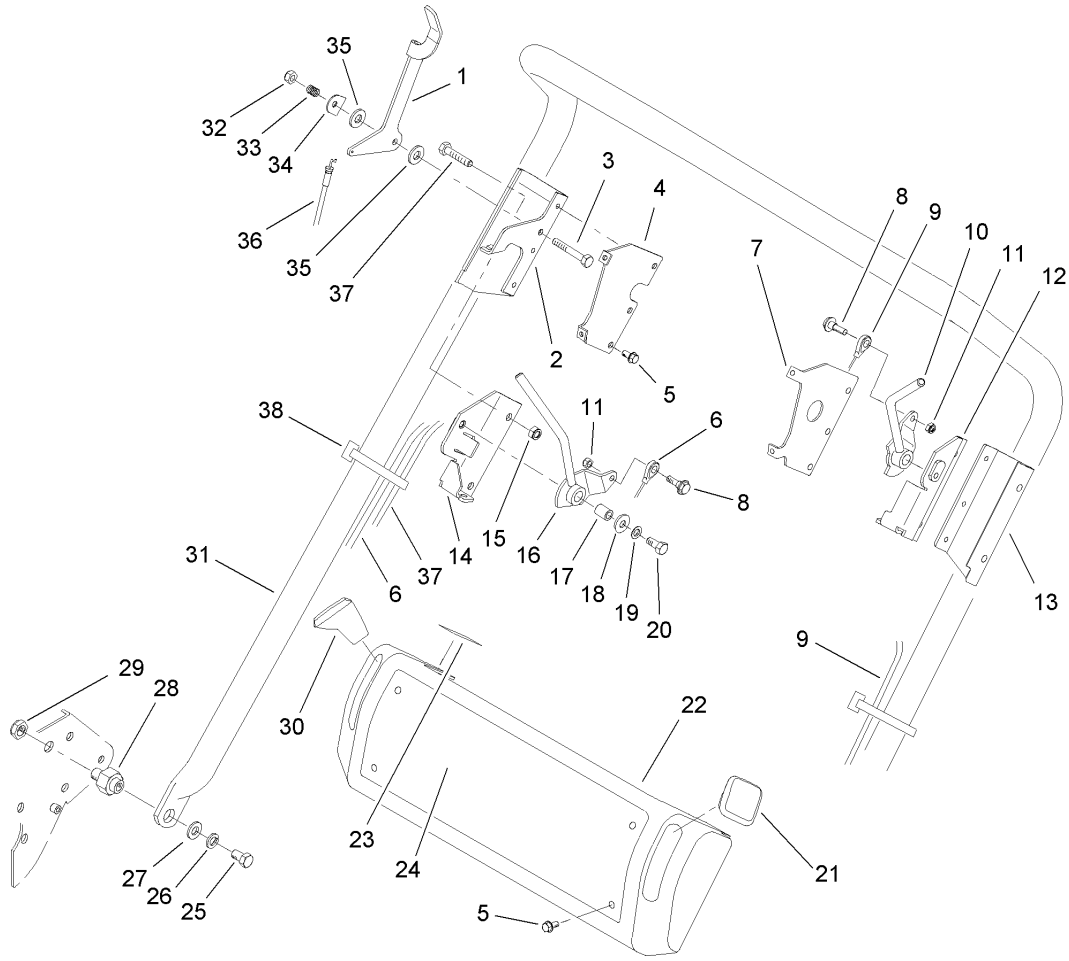

Handle Assembly

Ref	Part No.	Qty.	Description
1	93-6017	1	Lever-Throttle
2	95-0908-03	1	Bracket-Clutch, Skid
3	321-8	1	Screw-HH
4	93-6046-03	1	Bracket-Console, RH
5	93-6083	10	Screw-HWH
6	94-5870	1	Cable Clutch ASM
7	93-6047-03	1	Bracket-Console, LH
8	11-9030	2	Screw-Shoulder
9	94-5871	1	Cable Brake ASM
10	106-5348	1	Brake Lever ASM
11	3296-42	2	Nut-Lock, NI
12	93-6022	1	Bracket-Brake
13	95-0907-03	1	Bracket-Brake, Skid
14	93-6019	1	Bracket
15	104-8300	4	Nut-Flange, NI
16	106-5347	1	Clutch Lever ASM
17	47-4701	2	Bushing-Bronze
18	3256-71	2	Washer-Flat
19	3254-2	2	Washer-Lock, Internal
20	3210-7	2	Screw-HH
21	65-8971	1	Knob-Shift
22	93-6036	1	Cover-Console
23	93-6085	1	Decal-Throttle
24	105-5361	1	Decal-Console

Ref	Part No.	Qty.	Description
25	323-34	2	Screw-HH
26	3253-21	2	Washer-Lock
27	3256-24	2	Washer-Flat
28	110-7364	2	Pin-Handle, Pivot
29	3296-28	2	Nut-Lock, NI
30	65-8970	1	Knob-Shift
31	93-9044	1	Handle
32	3296-56	1	Nut-Lock, NI
33	3-5787	1	Spring-Compression
34	93-6016	1	Washer-Retaining
35	66-2921	2	Washer-Friction
36	94-5869	1	Throttle Cable ASM
37	94-5780	4	Screw-HWH
38	3290-378	2	Tie-Cable

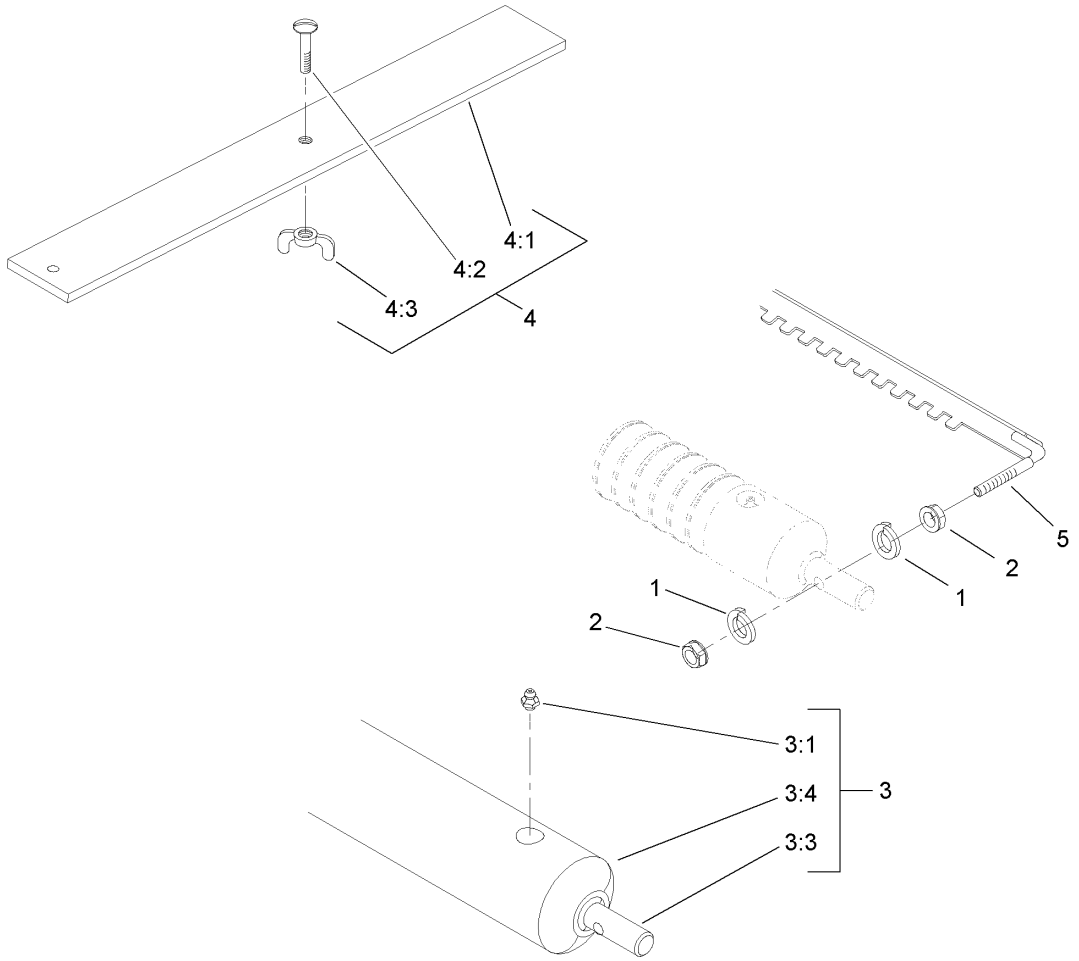

Roller and Height-of-Cut Bar Assembly

Ref	Part No.	Qty.	Description
1	3254-8	4	Washer-Lock
2	3219-1	4	Nut-Hex
3	95-0930	1	Full Roller ASM
3:1	302-5	2	Fitting-Grease
3:3	52-3180	2	Bearing-Roller, Front
3:4	95-0918	1	Roller Tube ASM
4	94-9010	1	HOC Bar ASM
4:1	94-9011	1	Bar-HOC
4:2	32122-36	1	Screw
4:3	32103-2	1	Nut-Wing
5	94-9012-01	1	Wiehle Scraper ASM

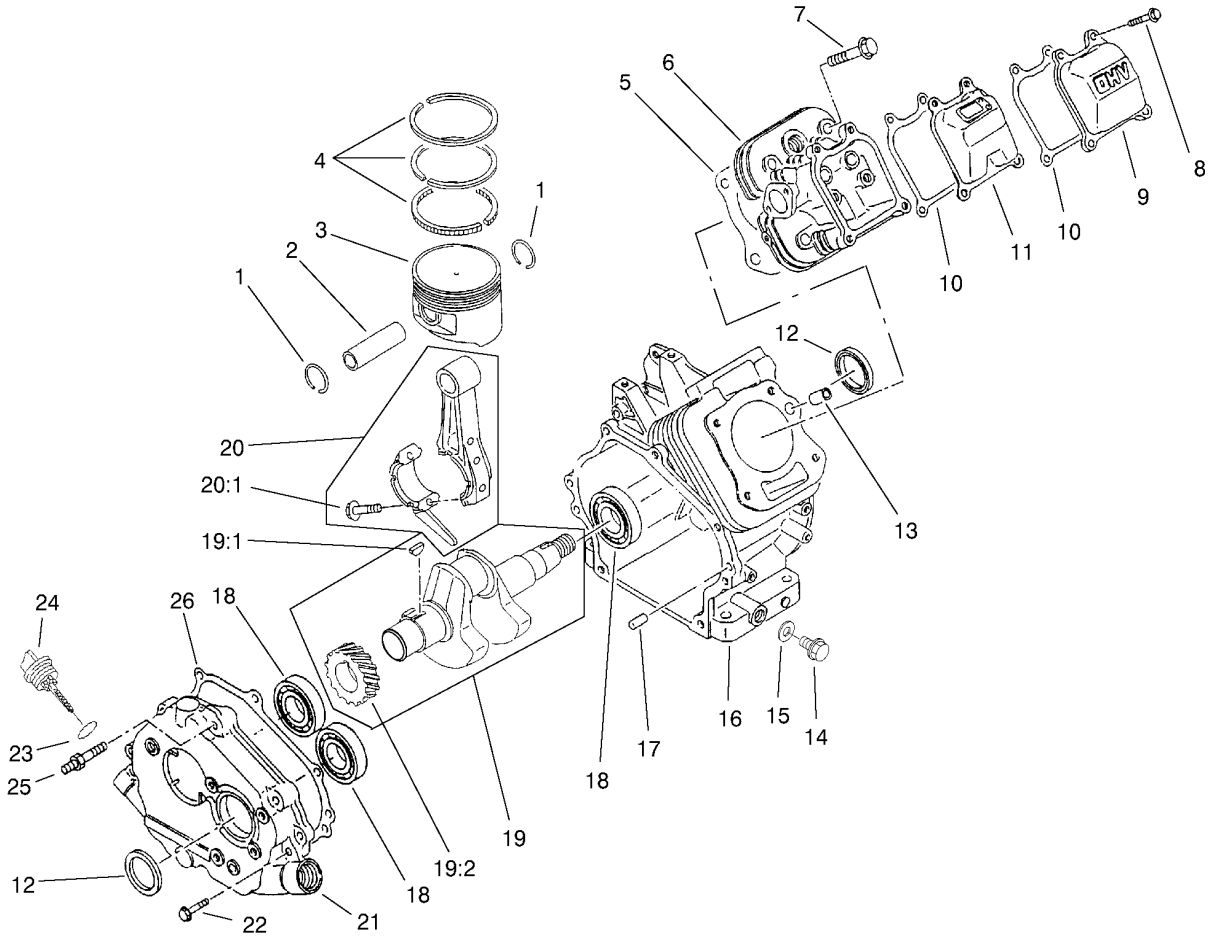

Engine Crankcase Assembly

Ref	Part No.	Qty.	Description
1	93-8500	2	Ring-Retaining
2	93-8501	1	Pin-Piston
3	93-8502	1	Piston
3	94-6836	1	Piston-0.5 O/S
4	93-8503	1	Set-Ring, Piston
4	94-6837	1	Set-Ring, Piston (.05Mm)
5	93-8504	1	Gasket-Head
6	93-8505	1	Head-Cylinder
7	93-8506	4	Bolt-Flanged
8	94-6838	4	Bolt-Flanged
9	93-8508	1	Case-Rocker
10	93-8509	2	Gasket-Rocker
11	93-8510	1	Breather
12	93-8511	2	Seal-Oil
13	93-8512	2	Pin
14	93-8513	2	Plug-Drain
15	93-8514	2	Gasket-Plug, Drain
16	93-8515	1	Crankcase
17	93-8516	2	Pin
18	93-8517	2	Bearing-Ball
19	93-8518	1	Crankshaft ASM
19:1	93-8526	1	Key
19:2	94-9043	1	Gear-Helical
20	93-8528	1	Connecting Rod ASM

Ref	Part No.	Qty.	Description
20:1	93-8527	2	Bolt-Rod
21	93-8520	1	Cover-Crankcase
22	93-8521	7	Bolt-Flanged
23	94-9041	2	O-Ring
24	93-8523	2	Cap-Filter, Oil
25	93-8524	1	Stud
26	93-8525	1	Gasket-Crankcase

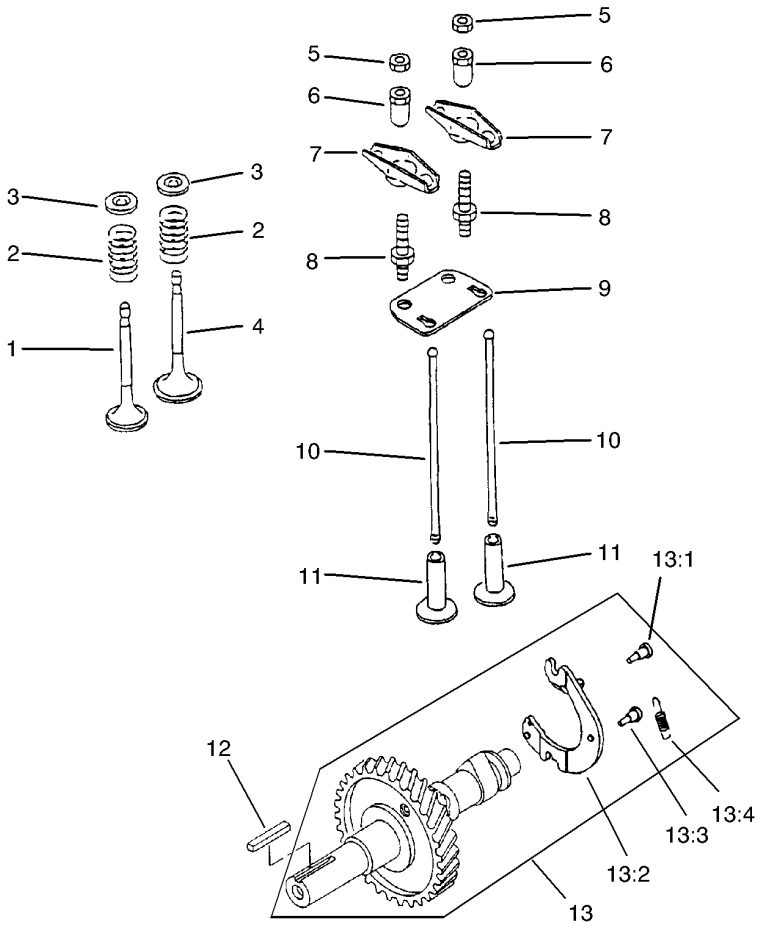

Camshaft and Valve Assembly

Ref	Part No.	Qty.	Description
1	93-8529	1	Valve-Exhaust
2	93-8530	2	Spring-Valve
3	93-8531	2	Retainer-Spring
4	93-8532	1	Valve-Intake
5	93-8533	2	Nut
6	93-8534	2	Nut
7	93-8535	2	Arm-Rocker
8	93-8536	2	Bolt
9	93-8537	1	Guide
10	93-8538	2	Rod-Push
11	93-8539	2	Tappet
12	108-9442	1	Key
13	93-8544	1	Camshaft ASM
13:1	93-8540	1	Pin
13:2	93-8543	1	Decompressor
13:3	93-8542	1	Pin
13:4	93-8541	1	Spring

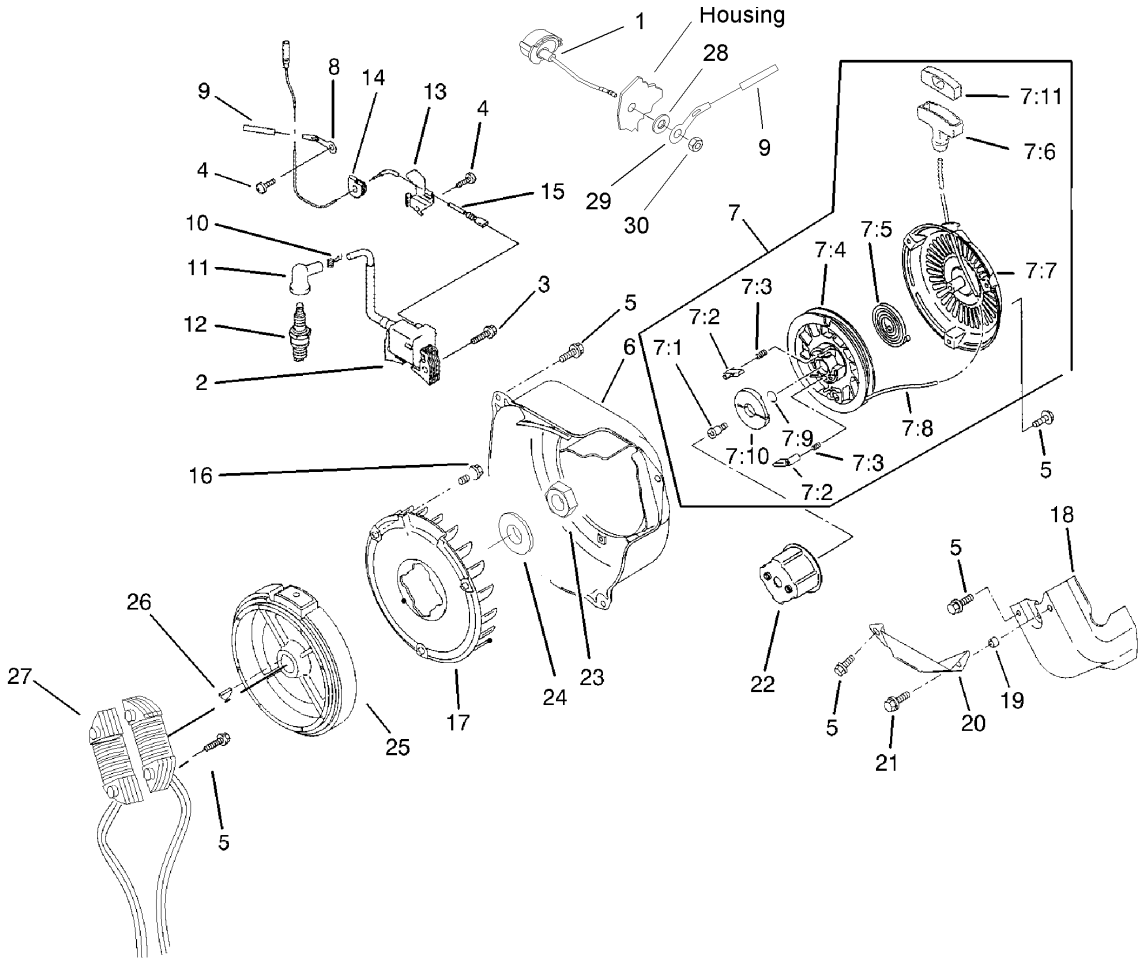

Ignition Assembly

Ref	Part No.	Qty.	Description
1	107-7606	1	Sealed Switch ASM
2	94-9031	1	Ignition Coil ASM
3	93-8548	6	Bolt-Flanged
4	93-8549	2	Screw
5	93-8550	10	Bolt-Flanged
6	107-7607	1	Housing-Fan
7	93-8552	1	Recoil Starter ASM
7:1	93-8553	1	Screw
7:2	93-8554	2	Pawl-Recoil
7:3	93-8555	2	Spring-Return
7:4	93-8556	1	Reel-Recoil
7:5	93-8557	1	Spring
7:6	94-9045	1	Grip-Starter, Recoil
7:7	94-9046	1	Case-Recoil
7:8	93-8560	1	Rope
7:9	93-8561	1	Ring-Retaining
7:10	93-8562	1	Guide-Pawl
7:11	94-9044	1	Cap-Grip
8	94-9039	1	Clamp
9	94-9040	2	Tube
10	94-9049	1	Spring-Terminal
11	93-8585	1	Cap-Plug, Spark
12	93-8584	1	Spark Plug
13	93-8583	1	Clamp

Ref	Part No.	Qty.	Description
14	107-7608	1	Grommet
15	94-9038	1	Wire-Lead
16	94-6840	3	Bolt-Flanged
17	93-8572	1	Fan
18	93-8563	1	Shroud-Engine
19	93-8564	1	Collar
20	93-8565	1	Shroud-Engine
21	93-8566	1	Bolt-Flanged
22	93-8567	1	Pulley-Recoil
23	93-8568	1	Nut
24	93-8569	1	Washer
25	99-6237	1	Flywheel ASM
26	93-8571	1	Key
27	99-4267	1	Coil-Lighting
28	33094-00	1	Washer-Plain
29	107-7609	1	Clamp
30	33014-00	1	Nut-Hex

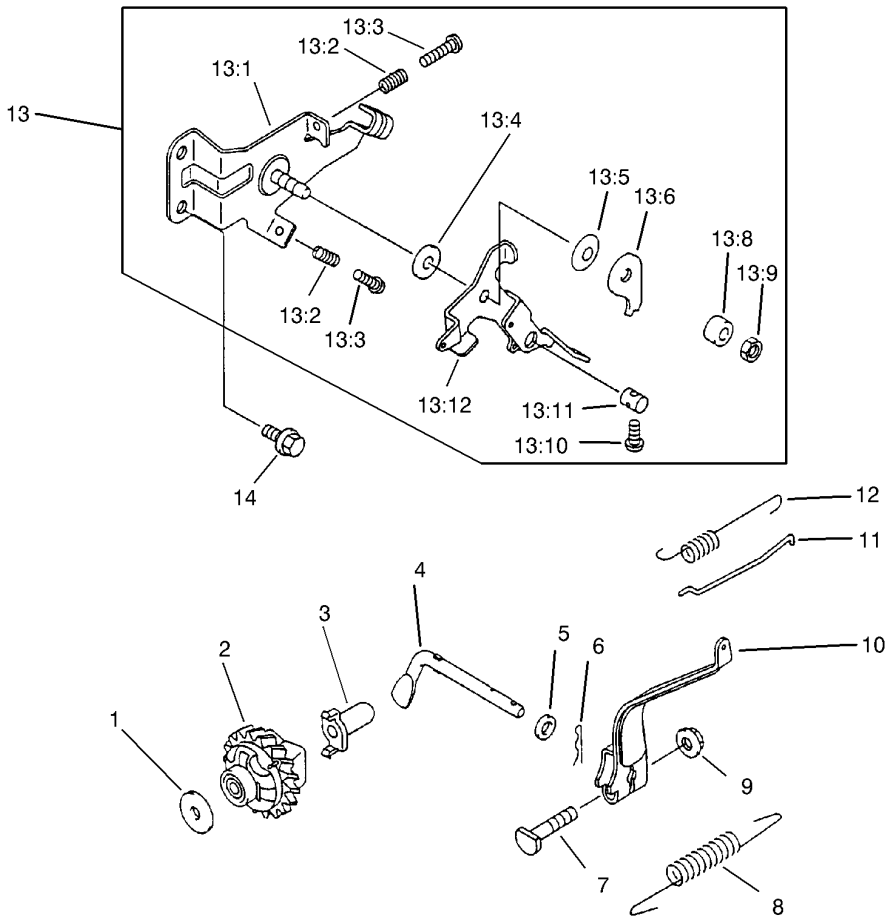

Governor Assembly

Ref	Part No.	Qty.	Description
1	94-6842	1	Washer
2	94-6841	1	Governor ASM
3	93-8610	1	Sleeve
4	93-8609	1	Arm-Pivot
5	93-8608	1	Washer
6	93-8607	1	Pin-Snap
7	93-8606	1	Bolt
8	94-9030	1	Spring-Governor
9	93-8631	1	Nut
10	93-8603	1	Arm-Governor
11	93-8602	1	Rod-Governor
12	93-8601	1	Spring
13	93-8599	1	Control ASM
13:1	93-8587	1	Bracket
13:2	93-8588	2	Spring
13:3	93-8589	2	Bolt
13:4	93-8590	1	Washer
13:5	93-8591	1	Spring
13:6	93-8592	1	Plate
13:8	93-8594	1	Spacer
13:9	93-8595	1	Nut
13:10	93-8596	1	Screw-Head, Pan
13:11	93-8597	1	Nut
13:12	93-8598	1	Lever

Ref	Part No.	Qty.	Description
14	93-8600	2	Bolt-Flanged

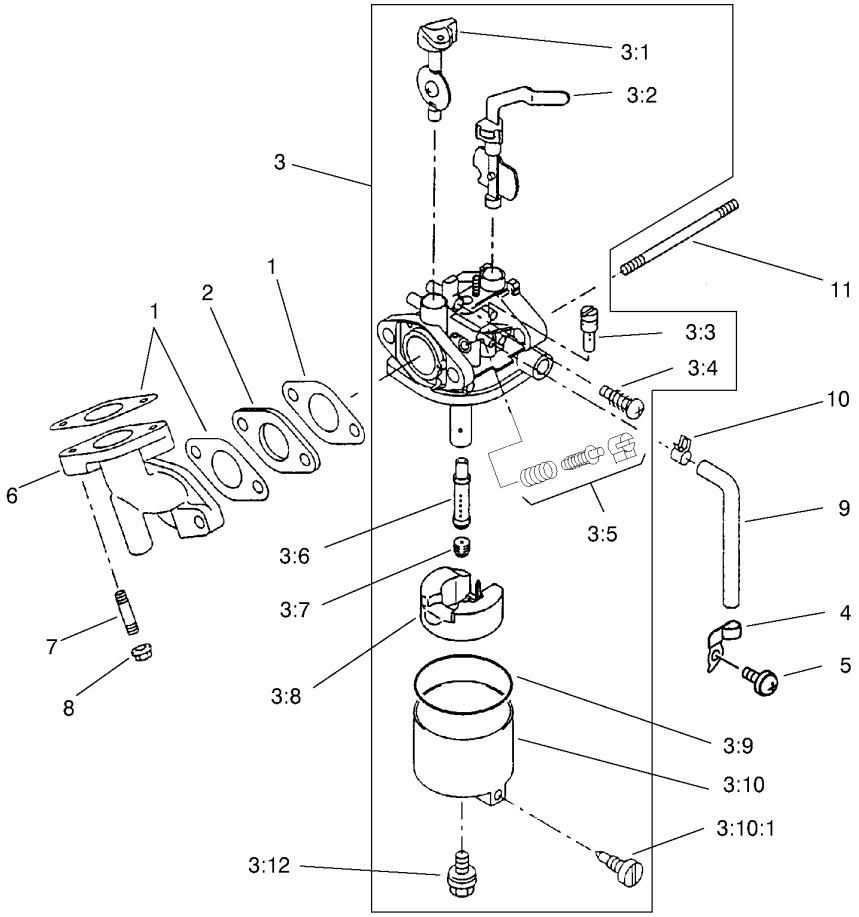

Carburetor Assembly

Ref	Part No.	Qty.	Description
1	93-8613	3	Gasket
2	94-9048	1	Insulator
3	94-9032	1	Carburetor ASM
3:1	94-9033	1	Throttle Valve ASM
3:2	93-8617	1	Valve-Choke
3:3	94-9037	1	Jet-Pilot, #40
3:4	93-8619	1	Screw ASM
3:5	94-9034	1	Limiter
3:6	94-9035	1	Nozzle-Main
3:7	94-9036	1	Jet-Main, #65
3:7	98-8735	1	Jet-Main, #62 High Alt
3:7	98-8736	1	Jet-Main, #60 High Alt
3:8	94-6844	1	Float ASM
3:9	93-8624	1	Gasket
3:10	93-8625	1	Float Chamber ASM
3:10:1	93-8626	1	Screw ASM
3:12	93-8627	1	Bolt
4	94-6846	1	Clamp
5	94-6845	1	Screw
6	93-8633	1	Pipe-Intake
7	93-8632	2	Bolt-Stud
8	93-8631	2	Nut
9	93-8630	1	Tube
10	93-8629	1	Clamp

Ref	Part No.	Qty.	Description
11	93-8628	2	Bolt-Stud

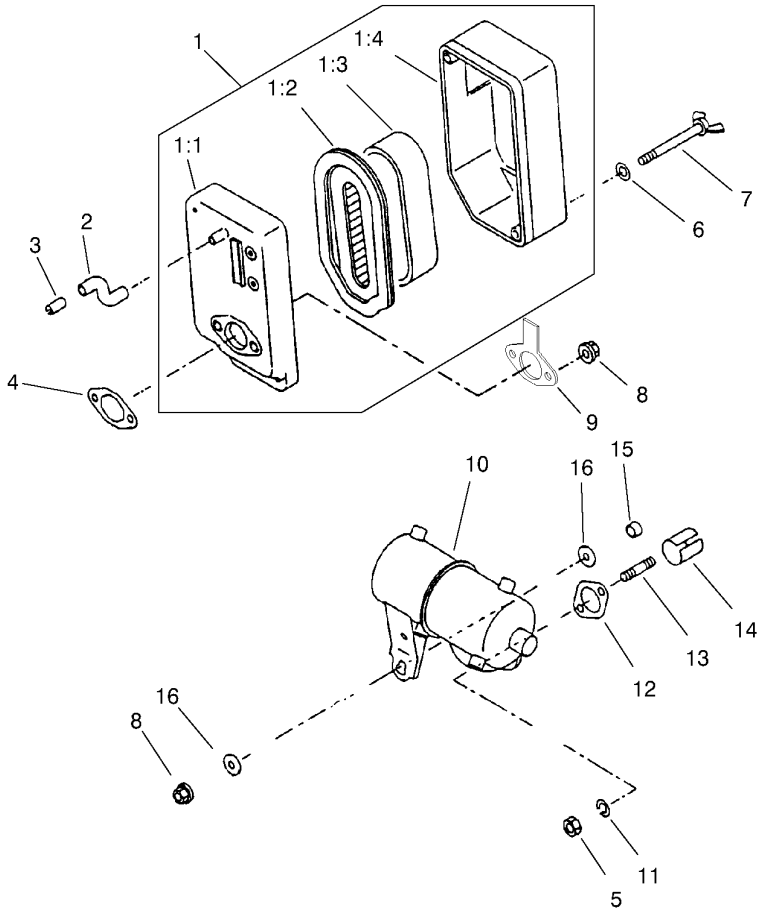

Air Cleaner and Muffler Assembly

Ref	Part No.	Qty.	Description
1	93-8634	1	Air Filter ASM
1:1	93-8635	1	Case Filter ASM
1:2	93-8636	1	Element-Filter, Air
1:3	93-8637	1	Element-Filter, Air
1:4	93-8638	1	Cap-Filter, Air
2	93-8659	1	Tube
3	93-8658	1	Pipe
4	93-8657	1	Gasket-Filter, Air
5	93-8656	2	Nut-Hex
6	93-8639	2	Washer
7	93-8640	2	Bolt
8	93-8631	3	Nut
9	93-8642	1	Plate-Filter, Air
10	98-3427	1	Muffler
11	93-8655	2	Washer-Spring
12	93-8654	1	Gasket-Muffler
13	94-6848	2	Bolt-Stud
14	93-8652	1	Pipe-Exhaust
15	93-8651	1	Collar
16	93-8650	2	Washer

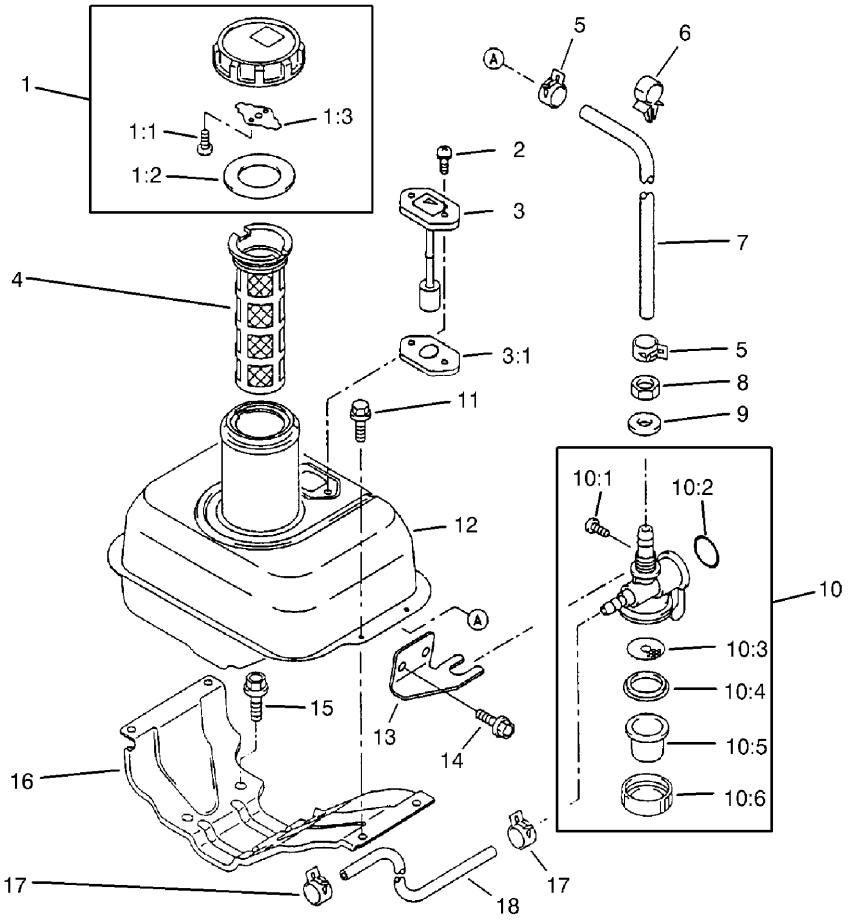

Fuel Tank Assembly

Ref	Part No.	Qty.	Description
1	93-8660	1	Fuel Cap ASM
1:1	93-8661	2	Screw
1:2	93-8662	1	Gasket
1:3	93-8663	1	Spring
2	93-8686	2	Screw
3	93-8685	1	Gauge-Fuel
3:1	104-2384	1	Gasket-Gauge, Fuel
4	94-6826	1	Filter-Fuel
5	93-8664	2	Clamp
6	93-8665	1	Clamp
7	93-8666	1	Tube
8	94-9042	1	Nut
9	93-8668	1	Washer
10	93-8669	1	TAP ASM
10:1	93-8670	1	Screw
10:2	93-8671	1	O-Ring
10:3	94-6849	1	Filter-TAP
10:4	93-8673	1	Gasket
10:5	93-8674	1	Cup-TAP
10:6	93-8675	1	Nut
11	94-6838	4	Bolt-Flanged
12	104-2382	1	Tank-Fuel
13	93-8681	1	Bracket
14	93-8680	2	Bolt-Flanged

Ref	Part No.	Qty.	Description
15	94-6825	4	Bolt-Flanged
16	104-2383	1	Bracket-Tank
17	93-8676	2	Clamp
18	93-8677	1	Tube

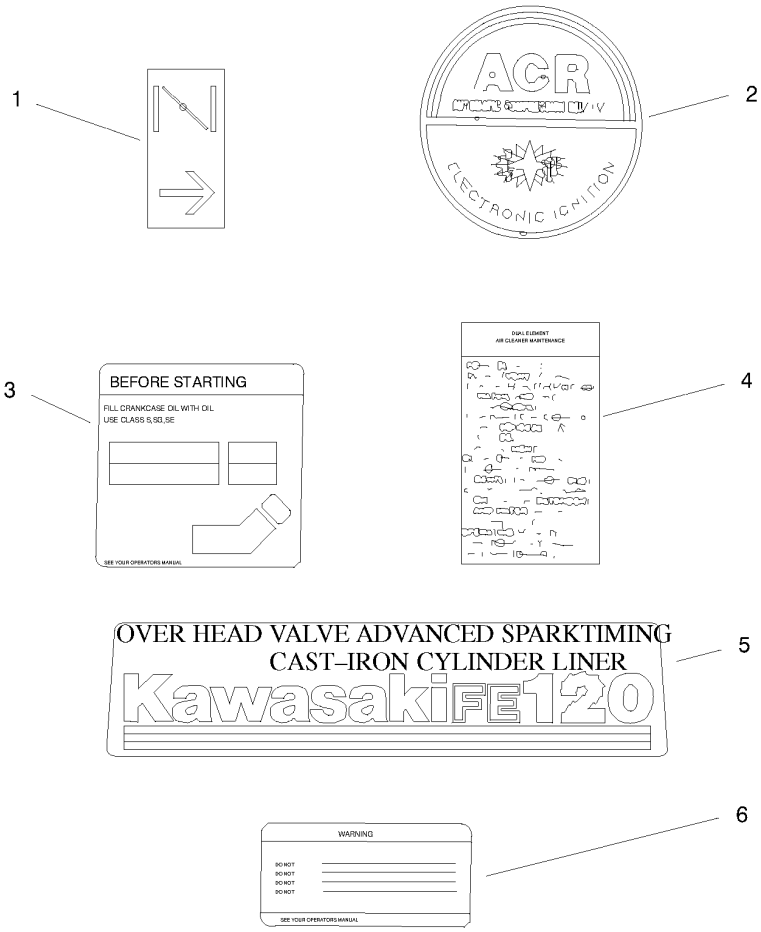

Engine Decals

Ref	Part No.	Qty.	Description
1	93-8687	1	Decal-Choke
2	94-9027	1	Label-Recoil
3	93-8689	1	Decal-Instructions
4	93-8690	1	Decal-Maintenance
5	94-9028	1	Label-Kawasaki
6	93-8692	1	Decal-Warning

Attachments and Accessories

For 04060 - Greensmaster 1600

Product Name	Model/Part
Light Kit	04057
Wheel Kit	04123
Groomer Reel Kit	04124
Bedknife-Highcut	104-2646
Hour Meter Kit	105-5350
Operator Presence Kit	105-5363
Knife-Bed, Fairway	107-8181
25 Inch Clip Kit	65-9000
Bedknife-Tournament Cut	94-5885
Decal Kit	94-5895
Height-of-Cut Bar ASM	94-9010
Wiehle Scraper ASM	94-9012-01
Full Roller ASM	95-0930
Jet-Main, #62 High Altitude	98-8735
Jet-Main, #60 High Altitude	98-8736
Arm-HOC, Extended	99-4286

NOTES


TORO®