FORM NO. 3314–468 Rev. B

TORO

MODEL NO. 59174
MODEL NO. 59179

INSTALLATION INSTRUCTIONS

RECYCLER® MOWER BAGGING KIT

Since this instruction sheet covers only a minimal amount of information necessary to maintain and operate your mower, we suggest that you keep this material with your Operator's Manual so that both may be referred to for instructions concerning safe operation and proper maintenance procedures.

⚠ IMPORTANT

Your Recycler® mower has been updated to permit bagging. Make sure that your dealer is aware of this whenever parts are ordered or servicing is required.

⚠ SAFETY DECALS AND INSTRUCTIONS

Safety decals and instructions are easily visible to the operator and are located near any area of potential danger. Replace any decal that is lost or damaged.



ON REAR OF MOWER DECK (Part No. 82–7960)

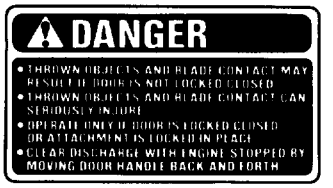

ON DISCHARGE TUNNEL



ON DISCHARGE TUNNEL PLUG

BAGGING KIT CONTENTS

PART NUMBER	PART DESCRIPTION	QUANTITY
77–0500	Discharge Plug Assembly	1
82–9150	Discharge Tunnel	1
76–4570	Latch Plate	1
77–0200	Door Assembly	1
80–3770	Door Retainer	1
46–8090	Screw	2
76–4660	Spring	1
80–3780	Spring Bracket	1
	(Part of discharge tunnel assembly)	
77–5200	Grass Bag Assembly (model 59174)	1
43–0025	Grass Bag Assembly (model 59179)	1
82–7960	Decal	1
3314–468 Rev. B	Installation Instruction Sheet	1

©The Toro Company–1992

ASSEMBLY INSTRUCTIONS

INSTALL DISCHARGE TUNNEL

Note: Determine left and right sides of mower by standing behind handles.

1. Remove spark plug wire from spark plug.

2. Remove and save the (4) bolts securing the Recycler® mower cover and deflector assembly to the deck (Fig. 1). Save the assembly for possible future reinstallation.

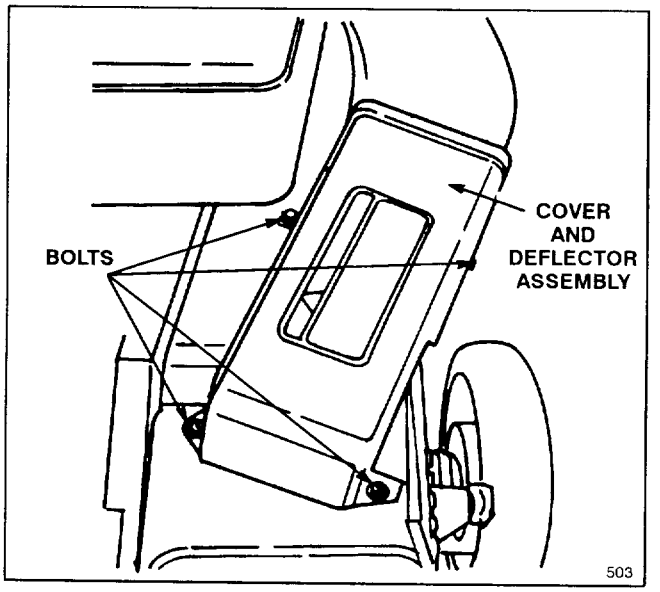

Figure 1

3. Position discharge tunnel and door assembly on deck. Align holes in discharge tunnel with holes in deck (Fig. 2).

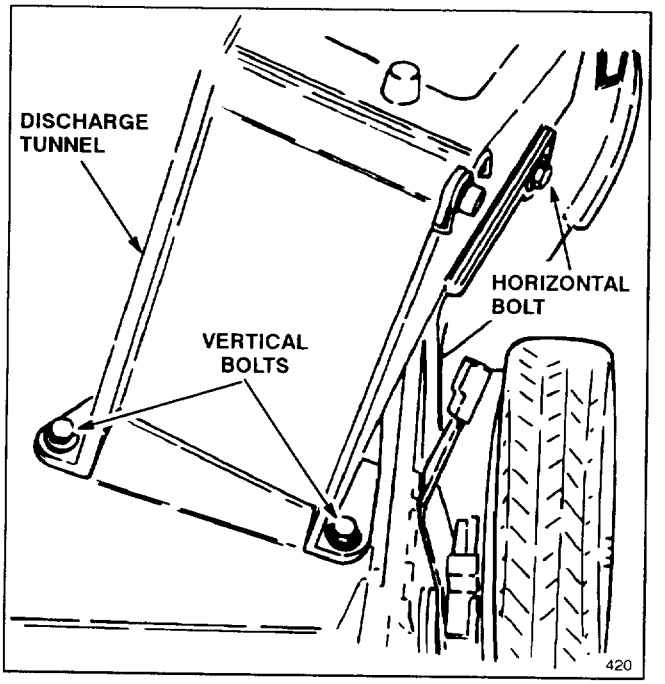

Figure 2

4. Fasten the front right, rear right, and rear left corners of discharge tunnel to deck, using the bolts saved from step 2. Make sure the shorter horizontal bolt is reinstalled in the front right location from which it was removed in step 2.

5. Secure spring bracket and discharge tunnel to deck with left front bolt (Fig. 3). A socket set extension may be necessary (Fig. 4).

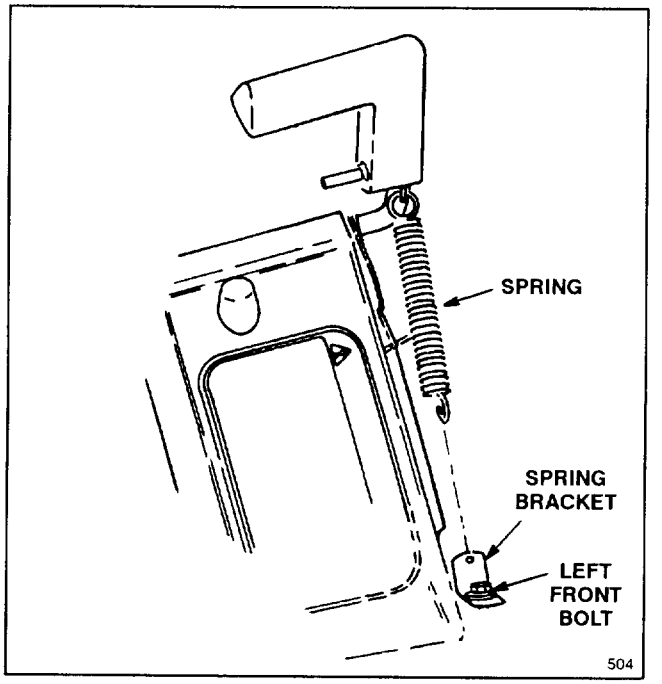

Figure 3

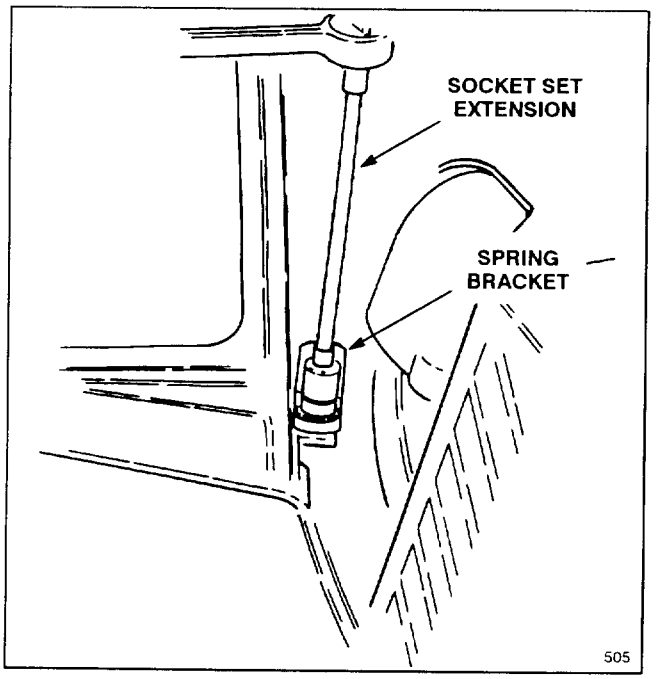

Figure 4

6. Hook end of spring through small hole on spring bracket (Fig. 3).

7. Open and close discharge door to ensure that spring is not contacting any part of engine. Make sure discharge tunnel door locks closed when handle is released.

ASSEMBLY INSTRUCTIONS

⚠ WARNING

- **Be sure that spring does not contact gas tank or any other part of engine.**
- **Wear between spring and engine parts may result in an unsafe operating condition.**
- **If spring contacts any part of engine, do not install bagger kit on mower. If you need assistance contact an Authorized Toro Service Dealer before proceeding.**

INSTALL BAGGING DECAL

1. Thoroughly clean flat area of mower deck behind discharge tunnel with a soap and water solution.

Note: Deck must be dry before installing decal.

2. Install decal in area shown in Figure 5. **Do not place bagging decal over model/serial number decal.**

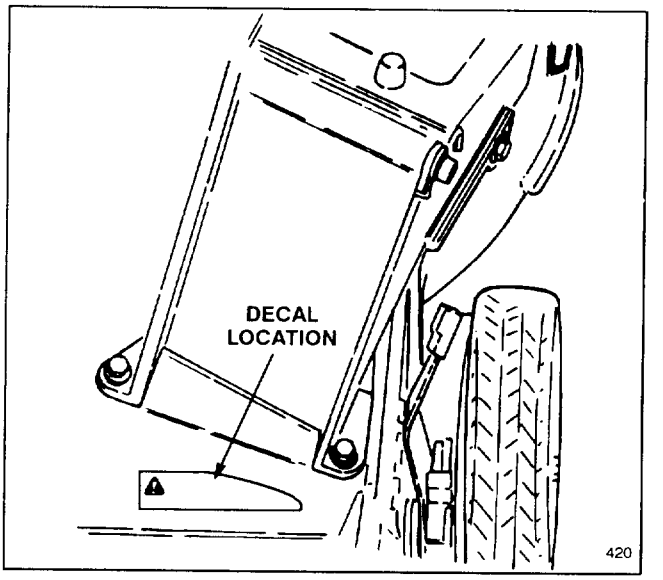

Figure 5

OPERATING INSTRUCTIONS

USING GRASS BAG

1. Stop the engine and wait for all moving parts to stop.

2. Ensure discharge door handle is fully forward and pin is engaged in catch (Fig. 6).

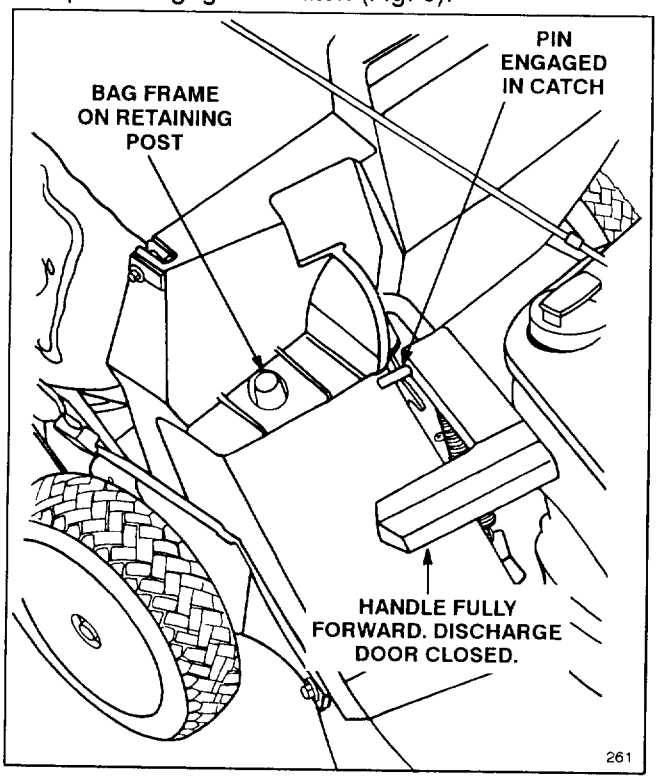

Figure 6

3. INSTALLING BAG—Slide hole in bag frame onto retaining post on discharge tunnel (Fig. 6) and set rear of bag frame onto lower handle.

4. Pull discharge door handle forward until pin clears catch and move handle rearward until pin locks in bag notch (Fig. 7). Discharge door in mower housing is now open.

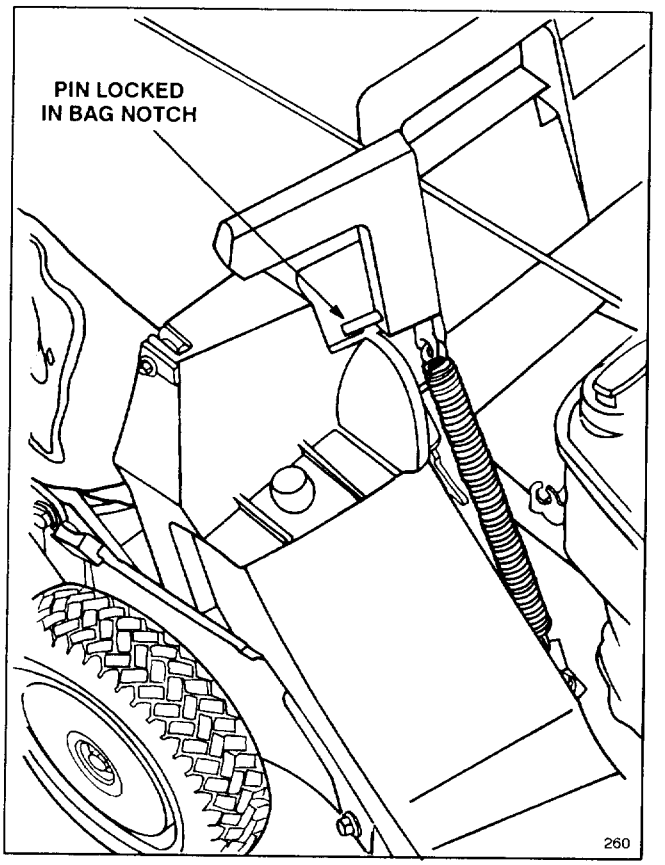

Figure 7

OPERATING INSTRUCTIONS

5. EMPTYING BAG—Stop engine and wait for all moving parts to stop. Lift discharge door handle straight up and move it forward to engage the locking pin with catch (Fig. 6). Grasp bag frame handle and rear of grass bag and lift bag off mower. Gradually tip bag forward to empty clippings.

6. To reinstall bag, repeat steps 2–4.

⚠ DANGER

- **Grass clippings and other objects can be thrown from an open discharge tunnel.**
- **Objects thrown with enough force could cause serious personal injury or death to operator or bystander.**
- **Never open door on discharge tunnel when engine is running unless the grass bag, optional side discharge attachment or discharge tunnel plug is securely installed.**

⚠ DANGER

- **A worn grass bag could allow small stones and other similar debris to be thrown in operator's or bystanders direction.**
- **Thrown objects can cause serious personal injury or death to operator or bystanders.**
- **Check the grass bag frequently. If it damaged, install a new genuine TORO replacement bag that has this or a similar warning.**

⚠ DANGER

- **Thrown objects may result if discharge door does not close completely.**
- **Thrown objects can cause serious personal injury or death.**
- **If discharge door cannot be closed because grass clippings clog discharge area, stop engine and gently move discharge door handle back and forth until door can be closed completely. If door still cannot be closed, remove obstruction with a stick, not your hand.**

USING DISCHARGE TUNNEL PLUG

1. Make sure engine is shut off. Open the discharge door by pulling forward on the handle and moving it rearwards (Fig. 8). Hold the discharge door handle to prevent the spring–loaded door from closing while inserting the plug.

2. Since the plug is slightly wider than the discharge tunnel opening, you must rotate the plug clockwise slightly while inserting it (Fig. 8). Make sure the arrow on the plug decal is pointing upwards.

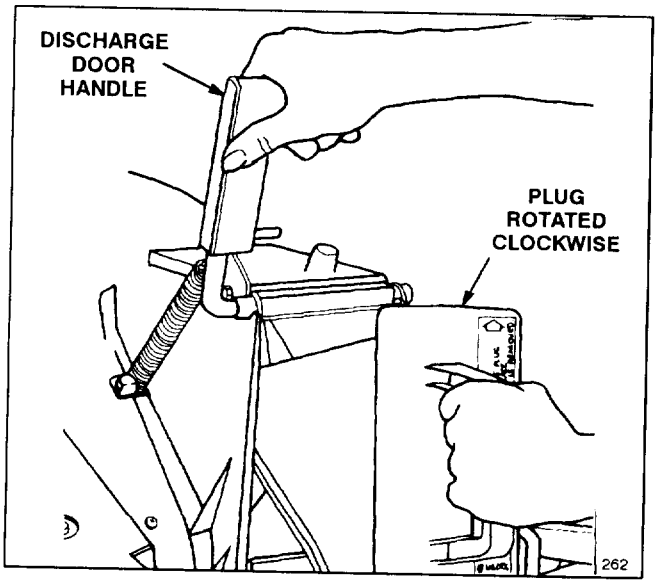

Figure 8

3. Push the plug all the way in until the spring clip on the bottom of the plug clicks into place, locking the plug securely into the discharge tunnel (Fig. 9) Release the discharge door handle to lock the top of the plug.

4. To remove the plug, move the discharge door handle rearwards while at the same time lift up the spring clip on the bottom of the plug. When the plug is unlocked, pull it out of the discharge tunnel.

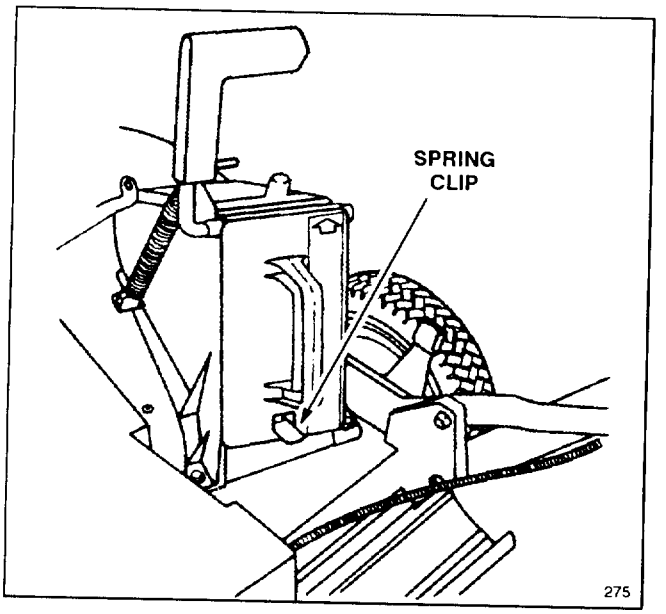

Figure 9

OPERATING INSTRUCTIONS

CHECK BLADE BRAKE CLUTCH SYSTEM

If your mower has a BBC (Blade Brake Clutch) safety system, the grass bag can be used to check for BBC system deterioration. (For an additional BBC test, refer to "Check Control Bar" section in your operator's manual.)

1. Install the empty grass bag on the discharge tunnel.

2. Push the control bar down to the lowest position (Fig. 10).

3. Lift the control bar to the normal "blade engaged position, about 2" below the handle. The bag should begin to inflate which indicates the blade is engaged and rotating.

4. Release control bar. If the bag does not immediately deflate, it indicates the blade is still rotating. Deterioration of the Blade Brake Clutch mechanism may have set in, which could result in an unsafe operating condition. Have mower inspected by an Authorized TORO Service Dealer.

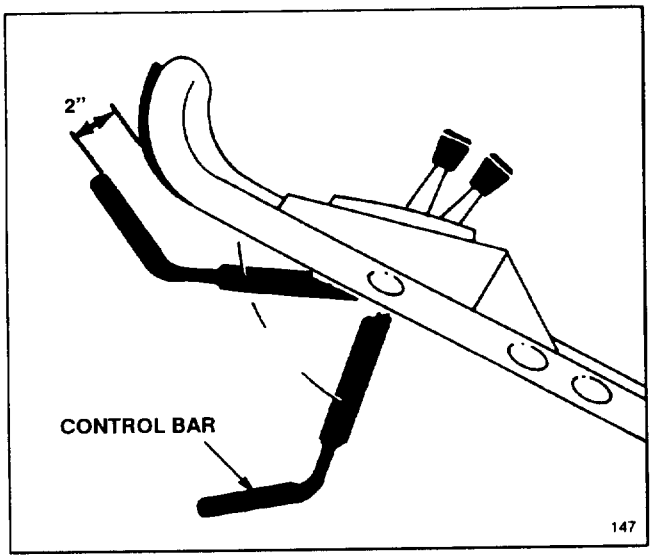

Figure 10

MAINTENANCE

CLEANING MOWER HOUSING, DISCHARGE TUNNEL, BELT COVER AND PLUG

To ensure best performance, the discharge tunnel plug must be cleaned after each use. When grass is thick and lush, clippings may collect on and around the plug; this may make plug removal difficult. After each use, remove plug from discharge tunnel and clean off all debris.

Always be sure that discharge tunnel door locks closed when handle is released. If debris prevents discharge door from locking closed, clean inside of discharge tunnel and door thoroughly.

1. Stop engine and pull wire off spark plug. Remove key from switch (key start models).

2. Tip mower on side opposite from the spark plug. Avoid rotating blade because starting problems may result.

3. Remove dirt and grass clippings that stick to housing with a hardwood scraper. Avoid burrs and sharp edges.

4. Turn mower upright.

5. Remove debris from inside of discharge tunnel.

6. Remove screws securing belt cover (Fig. 11) to mower housing. Lift off cover and brush out all debris from belt area. Reinstall belt cover.

7. Clean discharge tunnel plug.

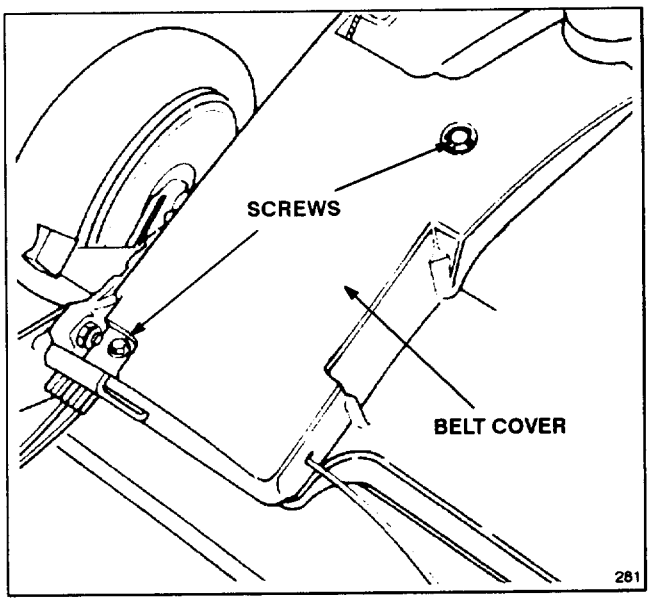

Figure 11


TORO